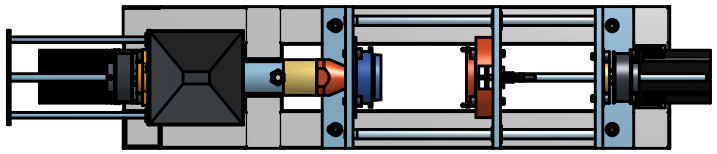

SCALE 1:8

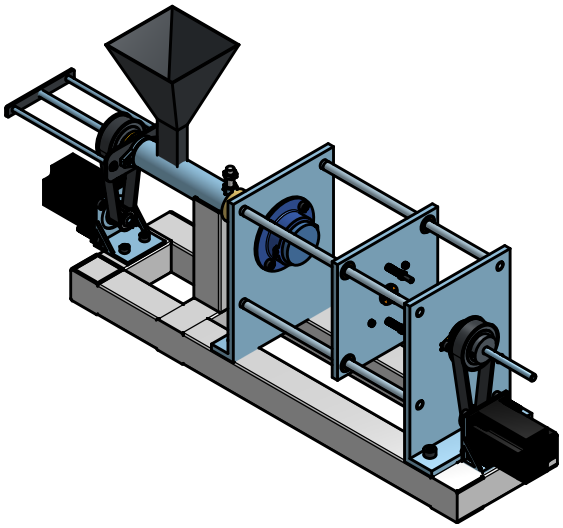

SCALE 1:8

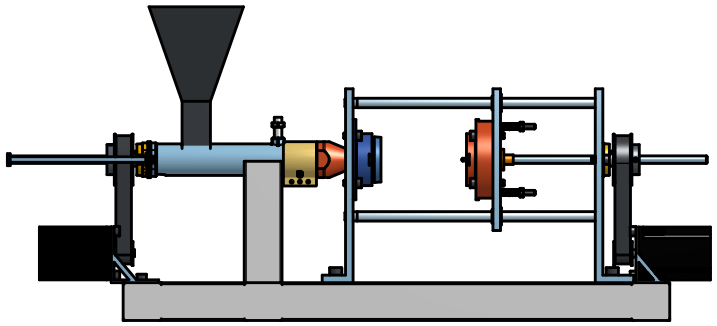

SCALE 1:8

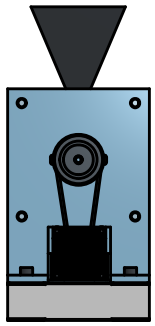

SCALE 1:8

UNLESS OTHERWISE SPECIFIED, DIMENSIONS ARE IN INCHES .XX = ±.0- .XXX = ±.00- .XXXX = ±.000- ANGULAR = ± ° FRACTIONAL = ± SURFACE FINISH		NAME	DATE
	DRAWN	LUCIA CIANI	04/03/2026
	CHECKED		
	APPROVED		
DO NOT SCALE DRAWING			
BREAK ALL SHARP EDGES AND REMOVE BURRS			
THIRD ANGLE PROJECTION	MATERIAL	FINISH	

TITLE

Inyectora de plástico

SIZE A	DWG NO.	REV.
SCALE 1:8	WEIGHT	SHEET 1 of 1