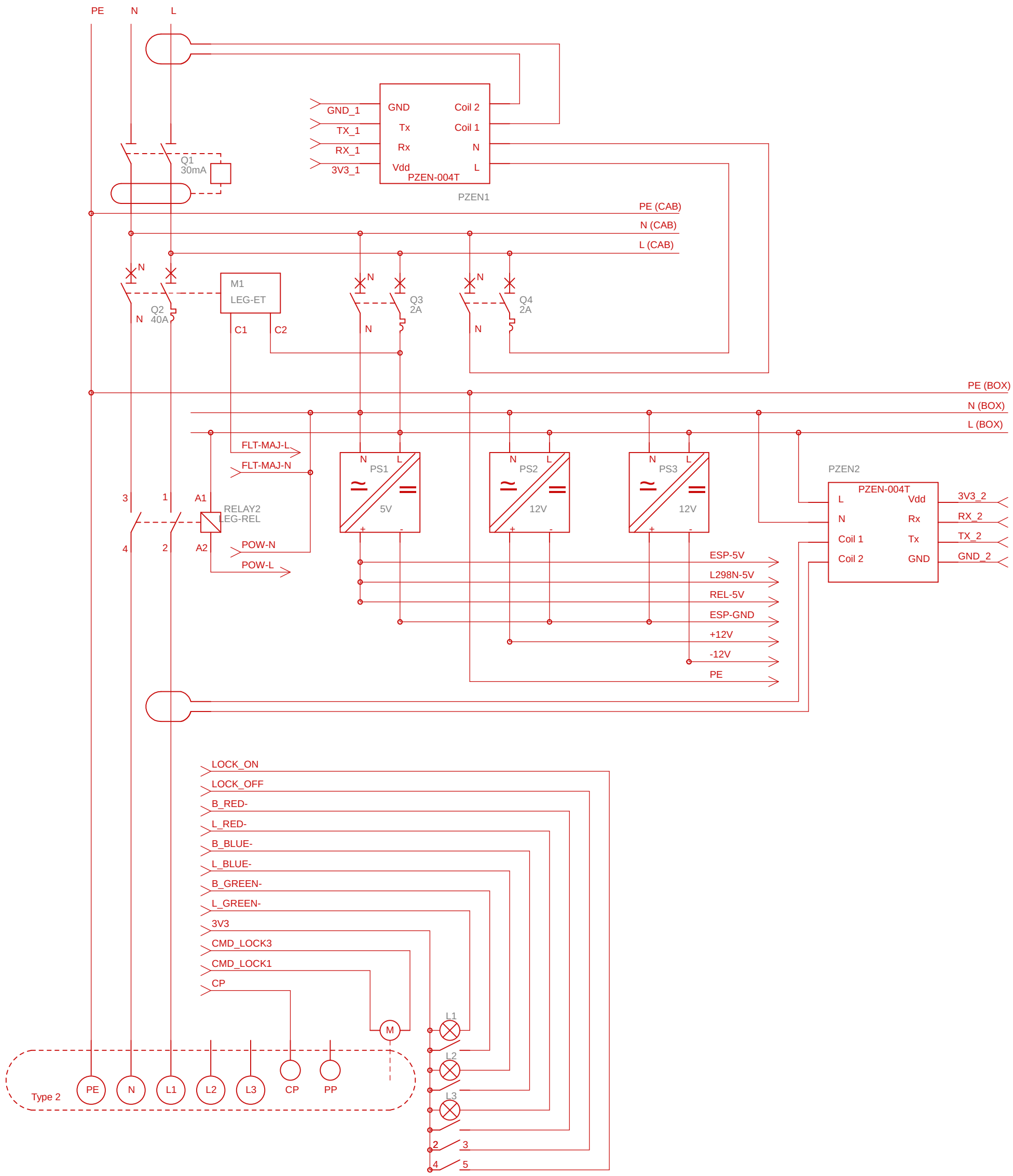
PE
N
L
GND_1
TX_1
RX_1
3V3_1
GND
Tx
Rx
Vdd
Coil 2
Coil 1
N
L
PZEN-004T
PZEN1
Q1
30mA
PE (CAB)
N (CAB)
L (CAB)
M1
LEG-ET
C1
C2
Q2
40A
Q3
2A
Q4
2A
PE (BOX)
N (BOX)
L (BOX)
FLT-MAJ-L
FLT-MAJ-N
RELAY2
LEG-REL
A1
A2
POW-N
POW-L
PS1
5V
PS2
12V
PS3
12V
PZEN2
PZEN-004T
Vdd
Rx
Tx
GND
3V3_2
RX_2
TX_2
GND_2
ESP-5V
L298N-5V
REL-5V
ESP-GND
+12V
-12V
PE
LOCK_ON
LOCK_OFF
B_RED-
L_RED-
B_BLUE-
L_BLUE-
B_GREEN-
L_GREEN-
3V3
CMD_LOCK3
CMD_LOCK1
CP
M
L1
L2
L3
Type 2
PE
N
L1
L2
L3
CP
PP

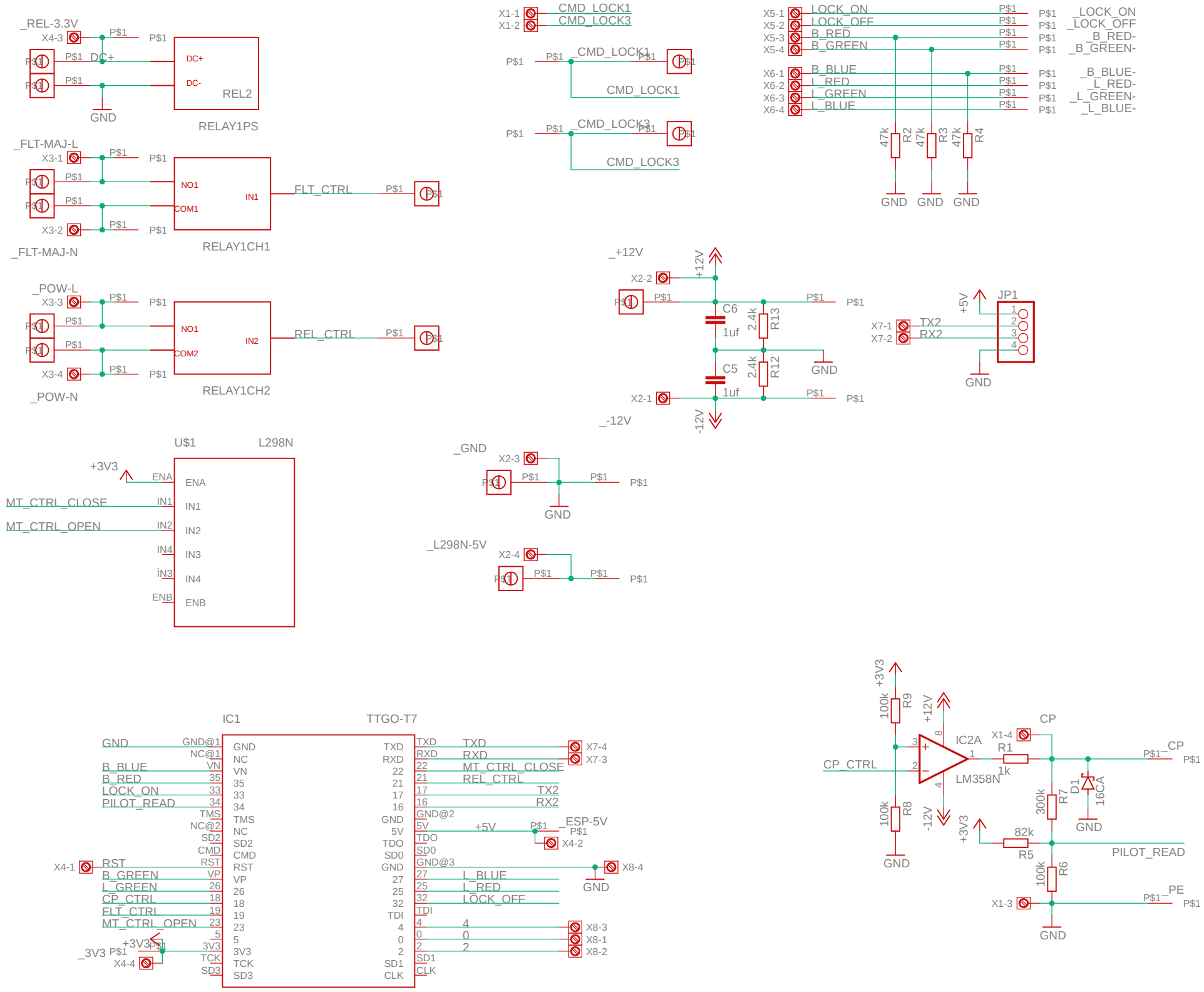
_REL-3.3V
X4-3
P$1
DC+
DC-
REL2
GND
RELAY1PS
_FLT-MAJ-L
X3-1
X3-2
NO1
COM1
IN1
FLT_CTRL
_FLT-MAJ-N
RELAY1CH1
_POW-L
X3-3
X3-4
NO1
COM2
IN2
REL_CTRL
_POW-N
RELAY1CH2
U$1
L298N
+3V3
ENA
IN1
IN2
IN3
IN4
ENB
MT_CTRL_CLOSE
MT_CTRL_OPEN
X1-1
X1-2
CMD_LOCK1
CMD_LOCK3
X5-1
X5-2
X5-3
X5-4
LOCK_ON
LOCK_OFF
B_RED
B_GREEN
_LOCK_ON
_LOCK_OFF
_B_RED-
_B_GREEN-
X6-1
X6-2
X6-3
X6-4
B_BLUE
L_RED
L_GREEN
L_BLUE
_B_BLUE-
_L_RED-
_L_GREEN-
_L_BLUE-
47k
R2
R3
R4
_+12V
X2-2
X2-1
C6
C5
1uf
2.4k
R13
R12
_-12V
+12V
-12V
X7-1
X7-2
TX2
RX2
JP1
+5V
_GND
X2-3
_L298N-5V
X2-4
IC1
TTGO-T7
GND
B_BLUE
B_RED
LOCK_ON
PILOT_READ
X4-1
RST
B_GREEN
L_GREEN
CP_CTRL
FLT_CTRL
MT_CTRL_OPEN
_3V3
X4-4
TXD
RXD
MT_CTRL_CLOSE
REL_CTRL
TX2
RX2
_ESP-5V
X4-2
X8-4
L_BLUE
L_RED
LOCK_OFF
X8-3
X8-1
X8-2
IC2A
LM358N
R1
1k
R9
R8
100k
CP
D1
16CA
R7
300k
82k
R5
R6
PILOT_READ
_PE
X1-3