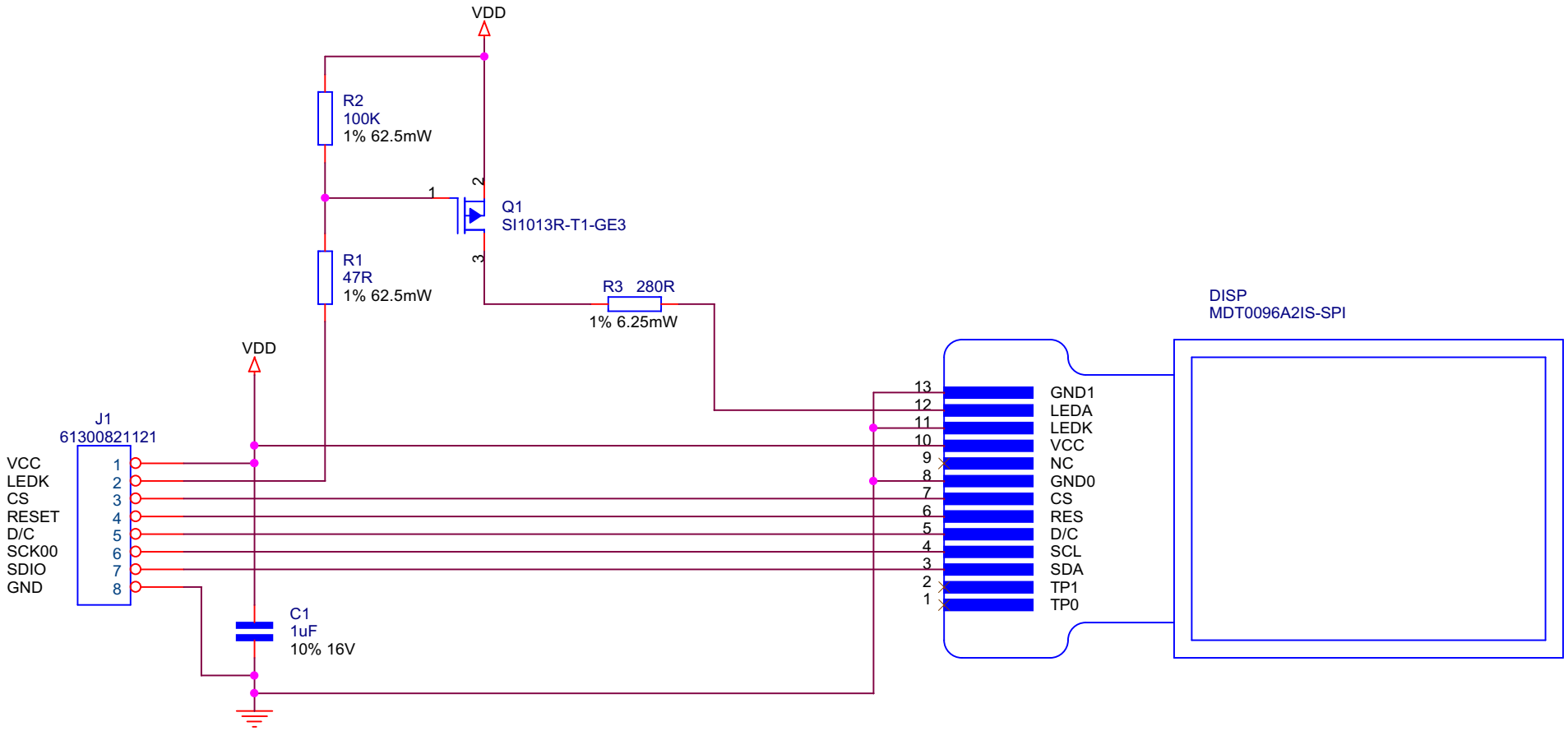

RENESAS ELECTRONICS EUROPE GmbH

DUKES MEADOW, MILLBOARD ROAD,
BOURNE END, BUCKINGHAMSHIRE, SL8 5FH.

Title	**MDT0096A2IS-SPI DISPLAY MEZZANINE PCB**	
Size A	Document Number **C14116**	Rev **1.0**
Date: Tuesday, November 07, 2023	Sheet 1 of 1	