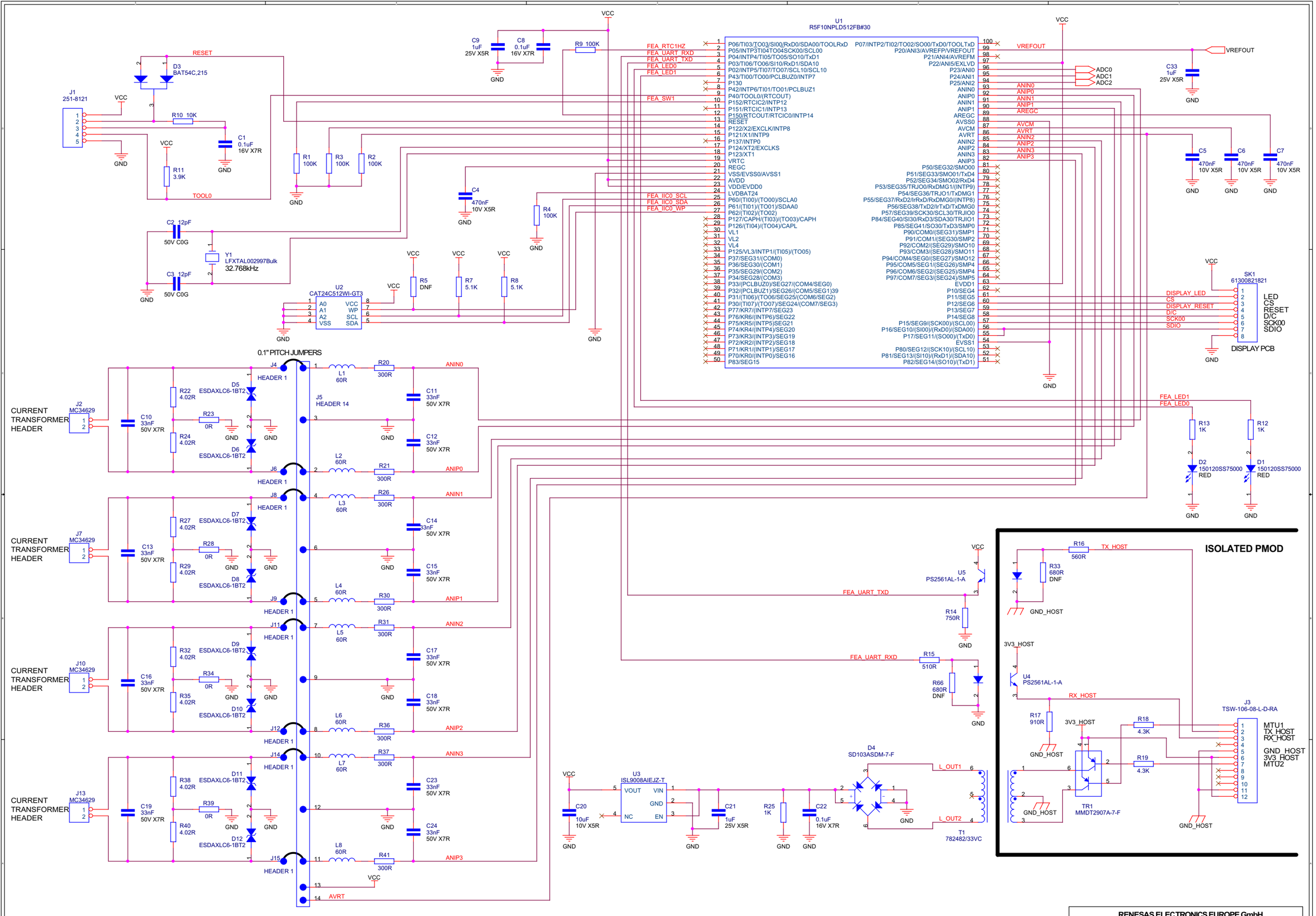

RENESAS ELECTRONICS EUROPE GmbH

DUKES MEADOW, MILLBOARD ROAD,
BOURNE END, BUCKINGHAMSHIRE, SL8 5FH.

Title	RL78I1C 3 PHASE PMOD 512K PCB	
Size: C	Document Number: Cad Data : C14115	Rev: 1.0
Date: Tuesday, November 07, 2023	Sheet 1 of 2	

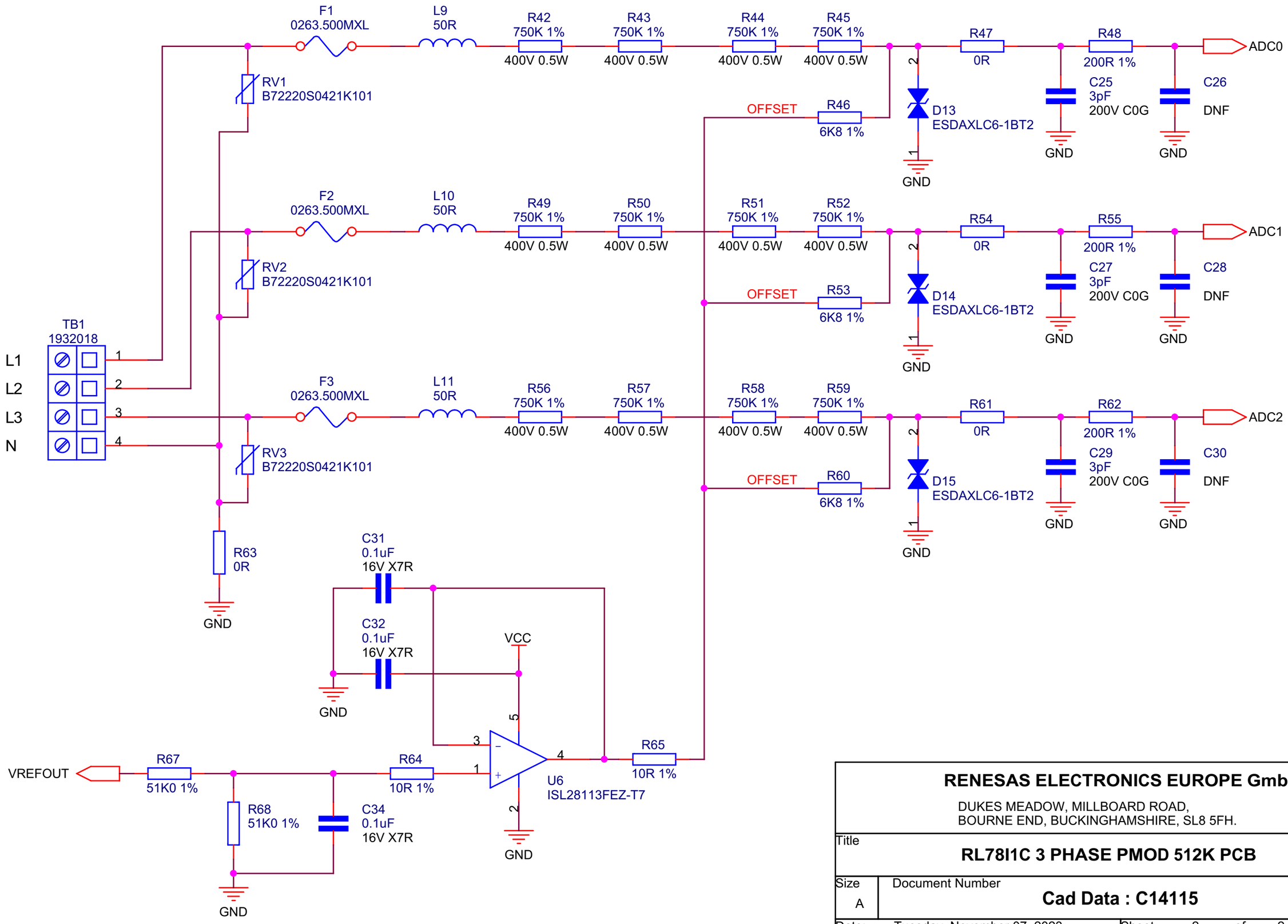

RENESAS ELECTRONICS EUROPE GmbH

DUKES MEADOW, MILLBOARD ROAD,
BOURNE END, BUCKINGHAMSHIRE, SL8 5FH.

Title	**RL78I1C 3 PHASE PMOD 512K PCB**	
Size A	Document Number **Cad Data : C14115**	Rev **1.0**
Date: Tuesday, November 07, 2023	Sheet 2 of 2	