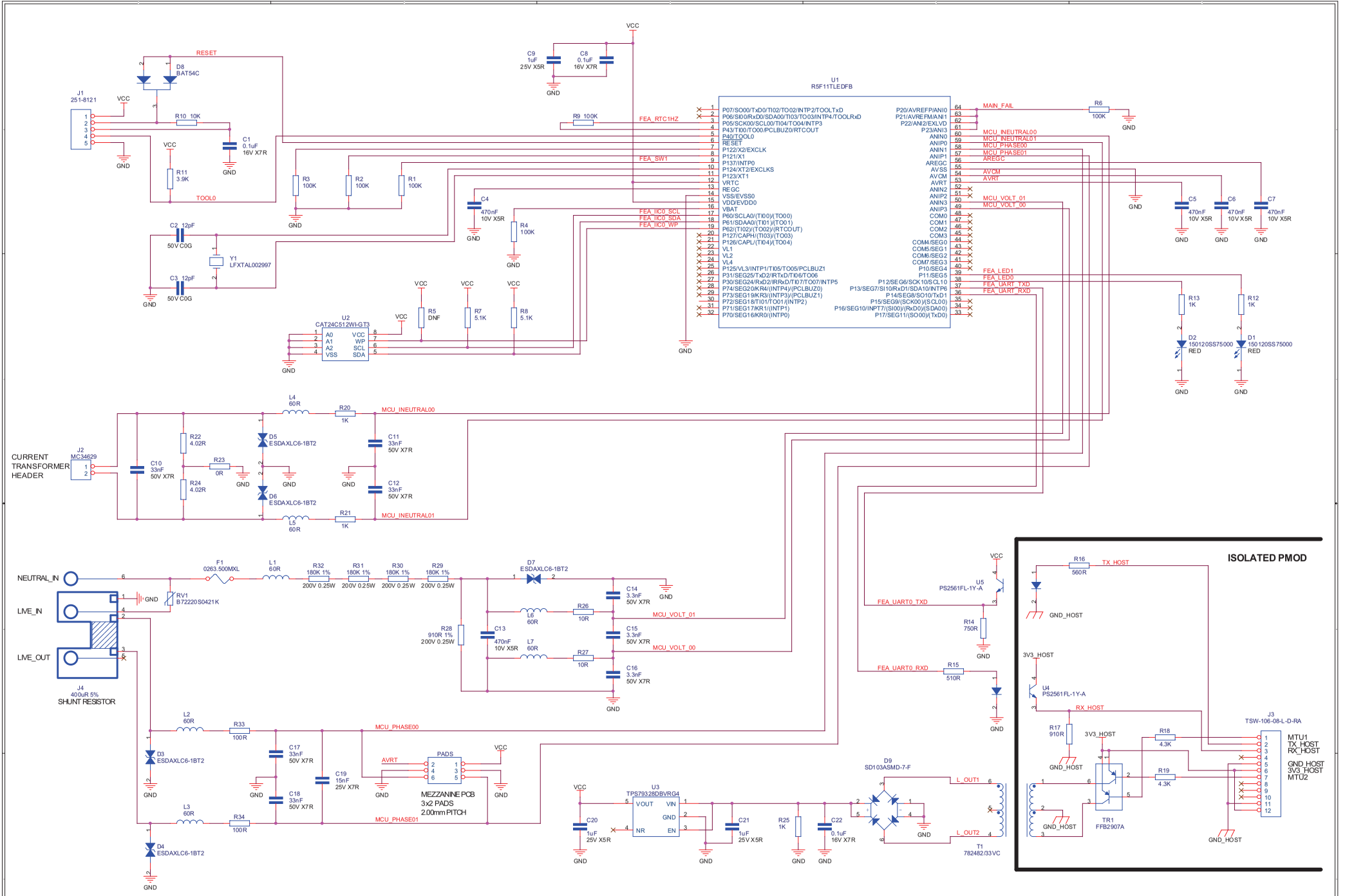
U1
R5F11TLEDFB
J1
251-8121
U2
CAT24C512WI-GT3
Y1
LFXTAL002997
J2
MC34629
CURRENT TRANSFORMER HEADER
NEUTRAL_IN
LIVE_IN
LIVE_OUT
J4
400uR 5%
SHUNT RESISTOR
RV1
B72220S0421K
F1
0263.500MXL
U3
TPS79328DBVRG4
D9
SD103ASMD-7-F
T1
782482/33VC
U5
PS2561FL-1Y-A
U4
PS2561FL-1Y-A
TR1
FFB2907A
J3
TSW-106-08-L-D-RA
MEZZANINE PCB
3x2 PADS
2.00mm PITCH
ISOLATED PMOD
MTU1
TX_HOST
RX_HOST
GND_HOST
3V3_HOST
MTU2
S1
M4 SMT STANDOFF
S2
M4 SMT STANDOFF
S3
M4 SMT STANDOFF
THREADED SMT STANDOFFS FOR LIVE AND NEUTRAL TERMINALS.
RENESAS ELECTRONICS E UROPE GmbH
DUKES MEADOW, MILLBOARD ROAD,
BOURNE END, BUCKINGHAMSHIRE, SL8 5FH.
Title
RL78I1C SHUNT ISOLA TION PMOD PCB
Size
C
Document Number
Cad Data : C13885
Rev
2.0
Date: Monday, November 04, 2019
Sheet 1 of 1