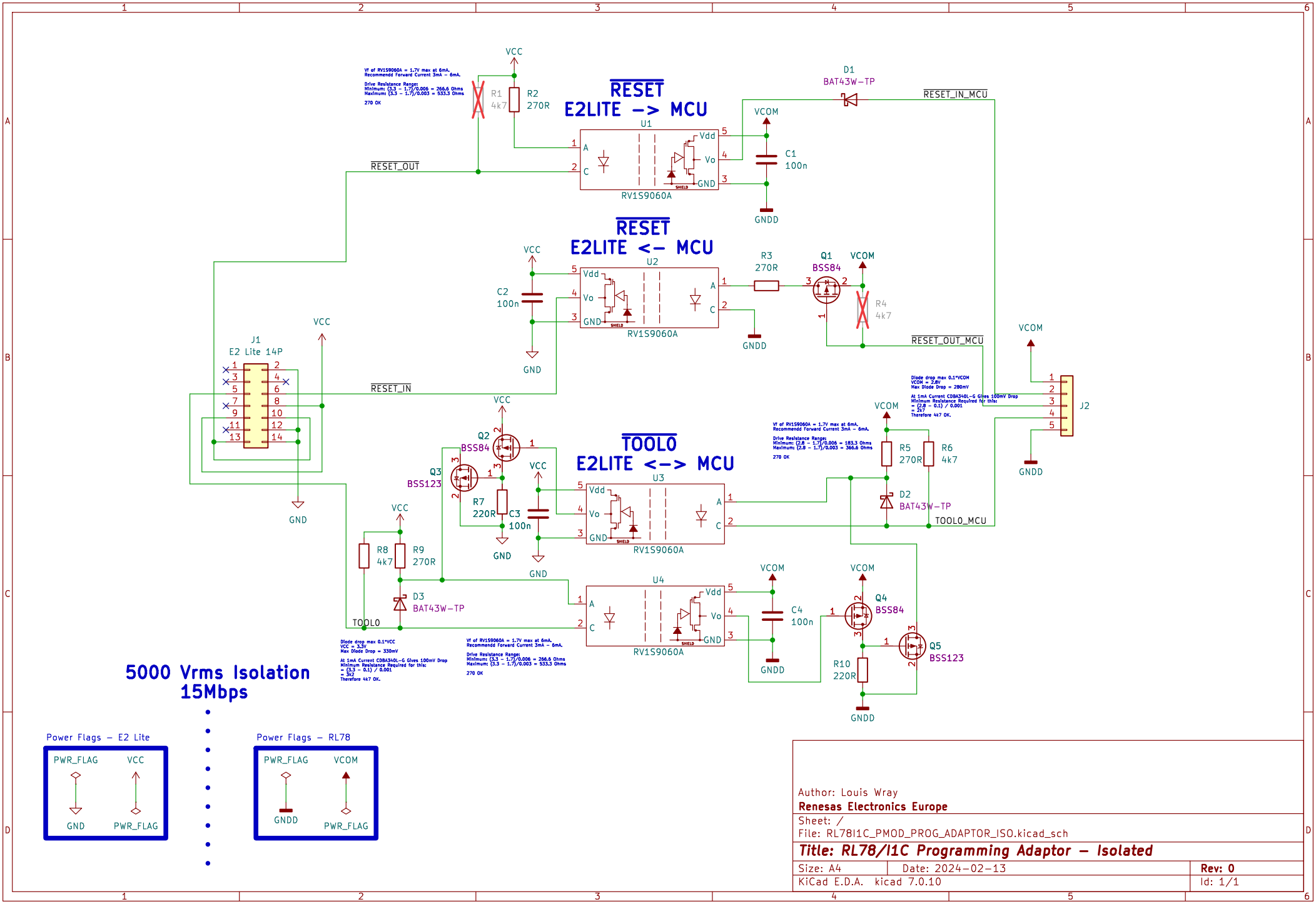

Author: Louis Wray
Renesas Electronics Europe

Sheet: /
File: RL78I1C_PMOD_PROG_ADAPTOR_ISO.kicad_sch

Title: RL78/I1C Programming Adaptor - Isolated

Size: A4	Date: 2024-02-13	**Rev: 0**
KiCad E.D.A. kicad 7.0.10		Id: 1/1