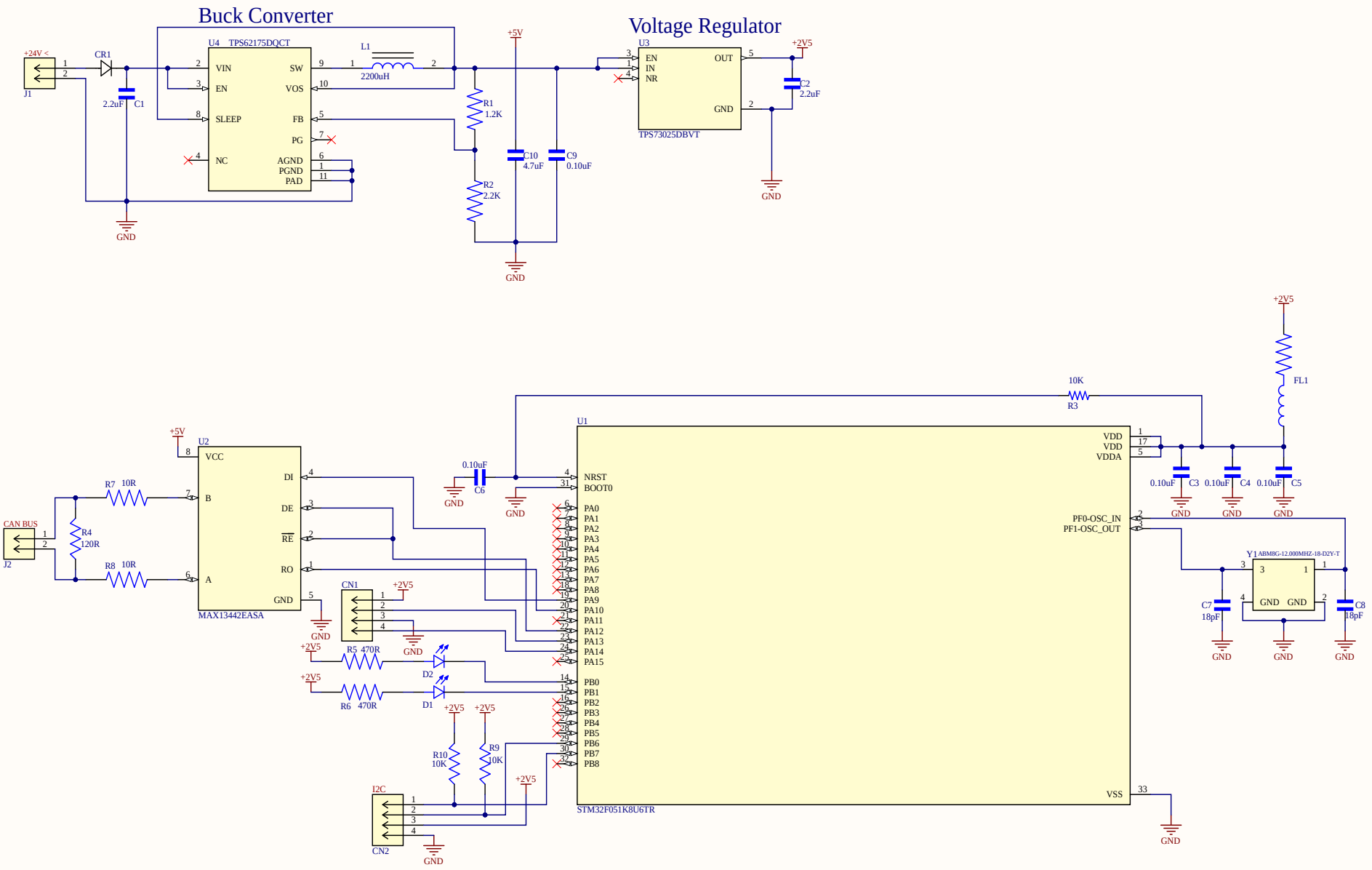

Title	I2C to Can Bus Converter	
Size A3	Number	Revision
Date: 1-11-2021		Sheet of
File: C:\Users\..\I2C_Can.SchDoc		Drawn By: Steven Liu