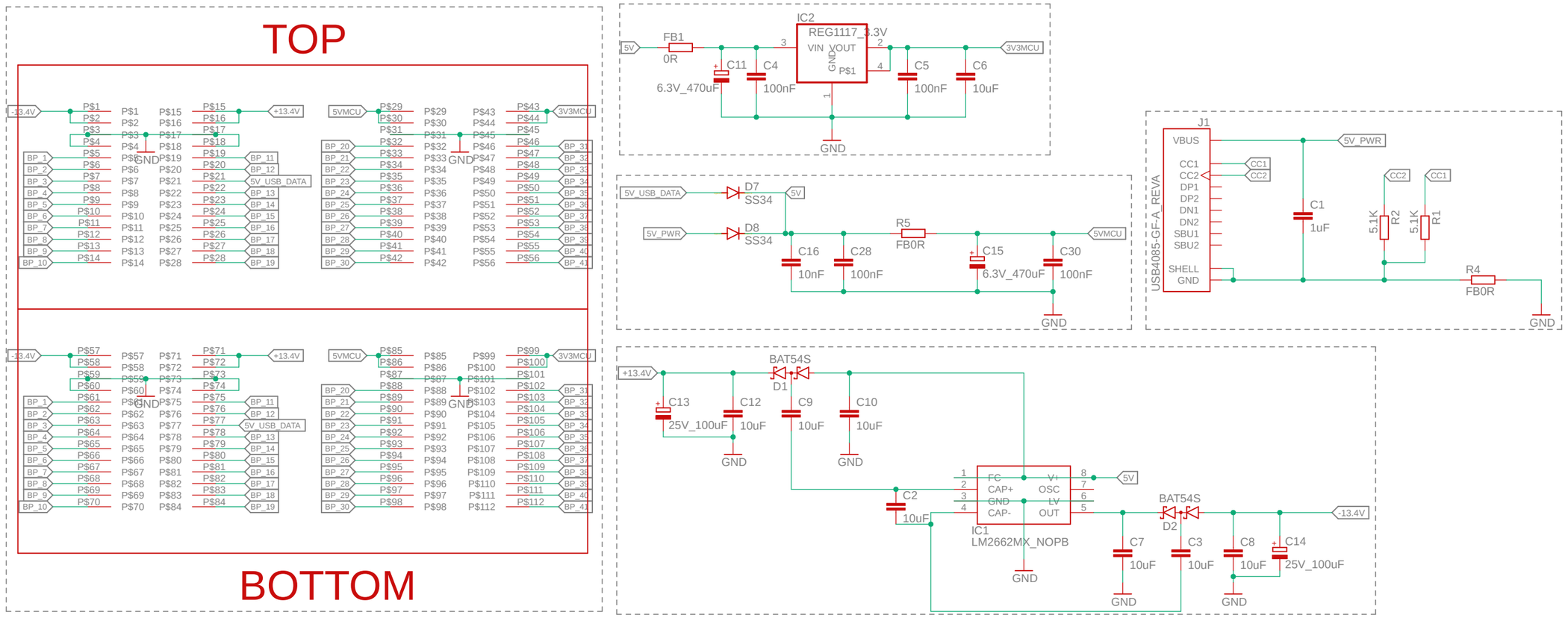

Project: OPENSENSE_CUBE
Version: 1.0A

Author: Nguyen Thanh Dat / BK_PMST

CHARGE_PUMP PWR MODULE

16/05/2023 15:24

Sheet: 1/1