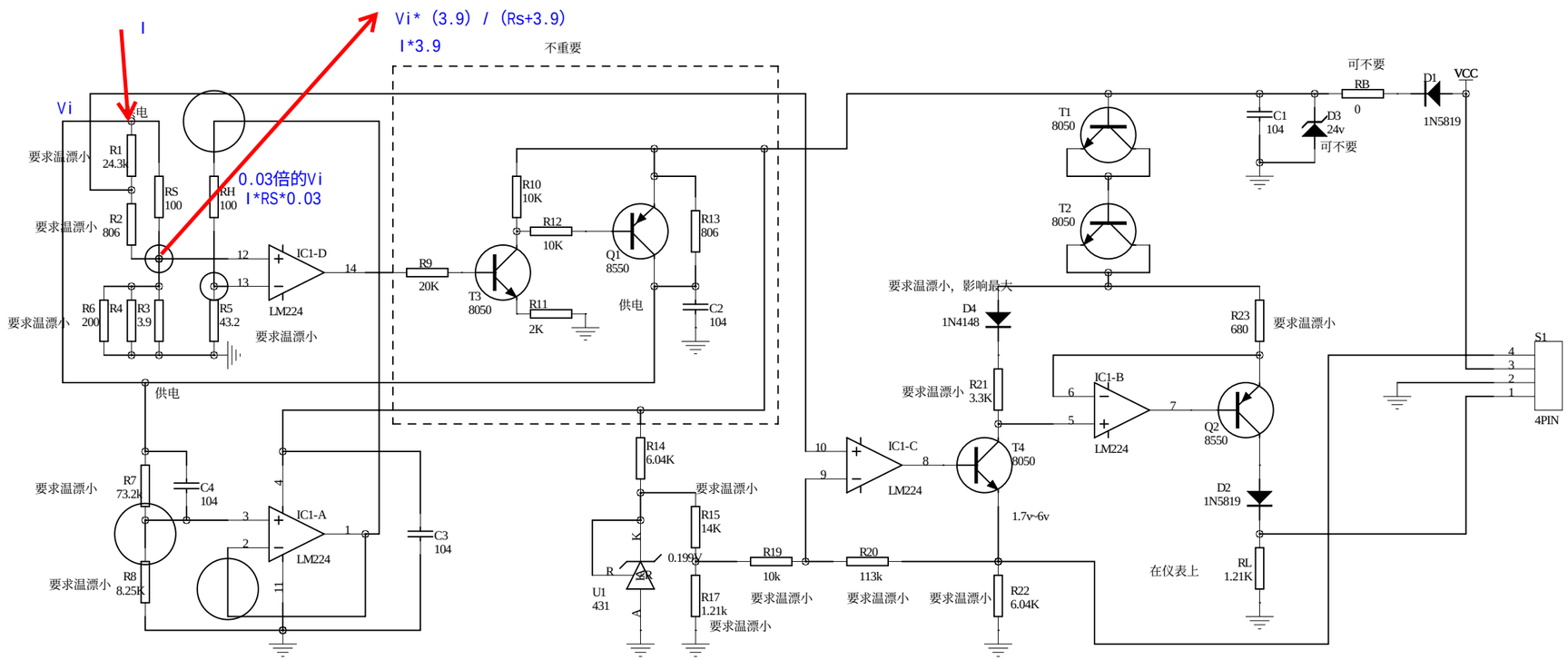

静态工作点：R3,, R5, R7, R8,

2010.10.26定版

Title		
Size	Number	Revision
Date:	Sheet of	
File:	Drawn By:	