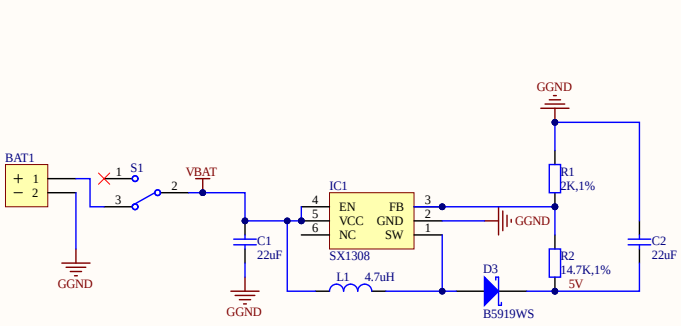

3.7V到5V升压

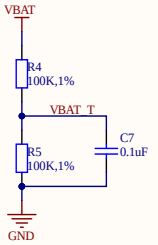

电池电压测量

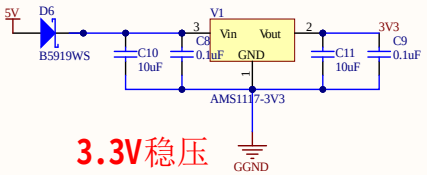

3.3V稳压

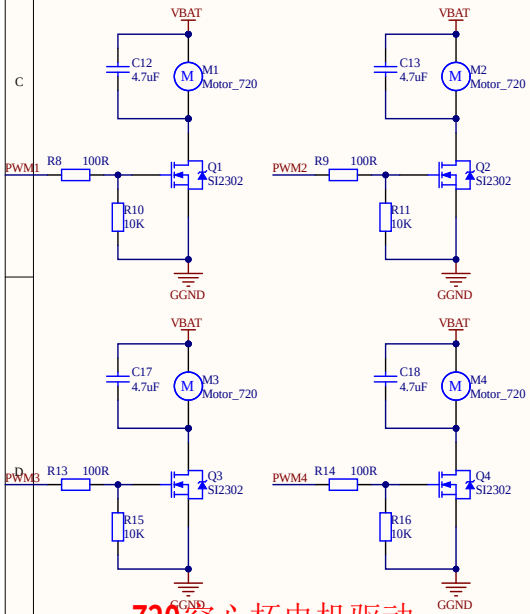

720空心杯电机驱动

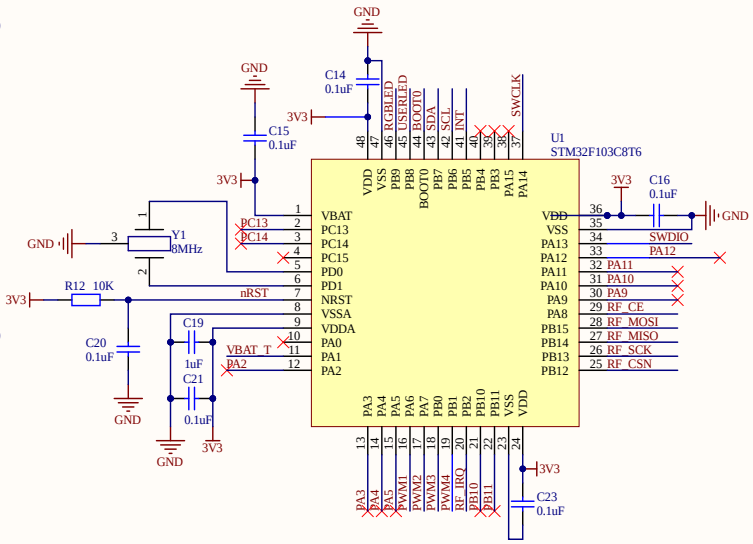

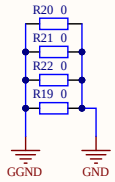

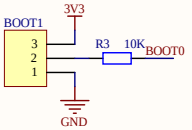

BOOT0启动项

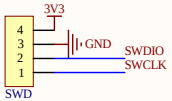

SWD调试接口

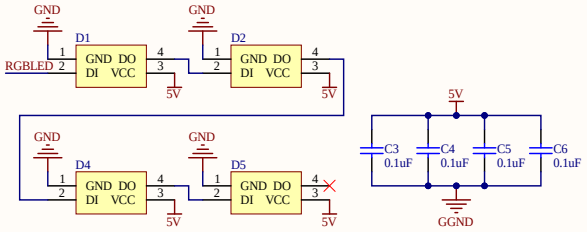

单总线全彩RGB灯

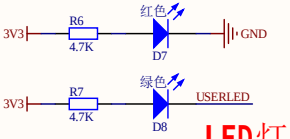

LED灯

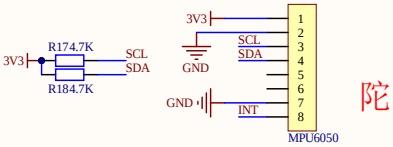

陀螺仪

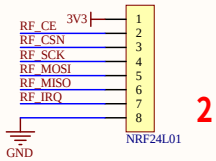

2.4G射频

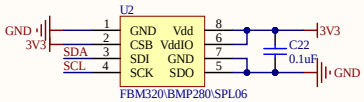

气压计

Address：0x6C

Title		
Size A3	Number	Revision
Date: 8/19/2022		Sheet of
File: C:\Users\..\小四轴.SchDoc		Drawn By:

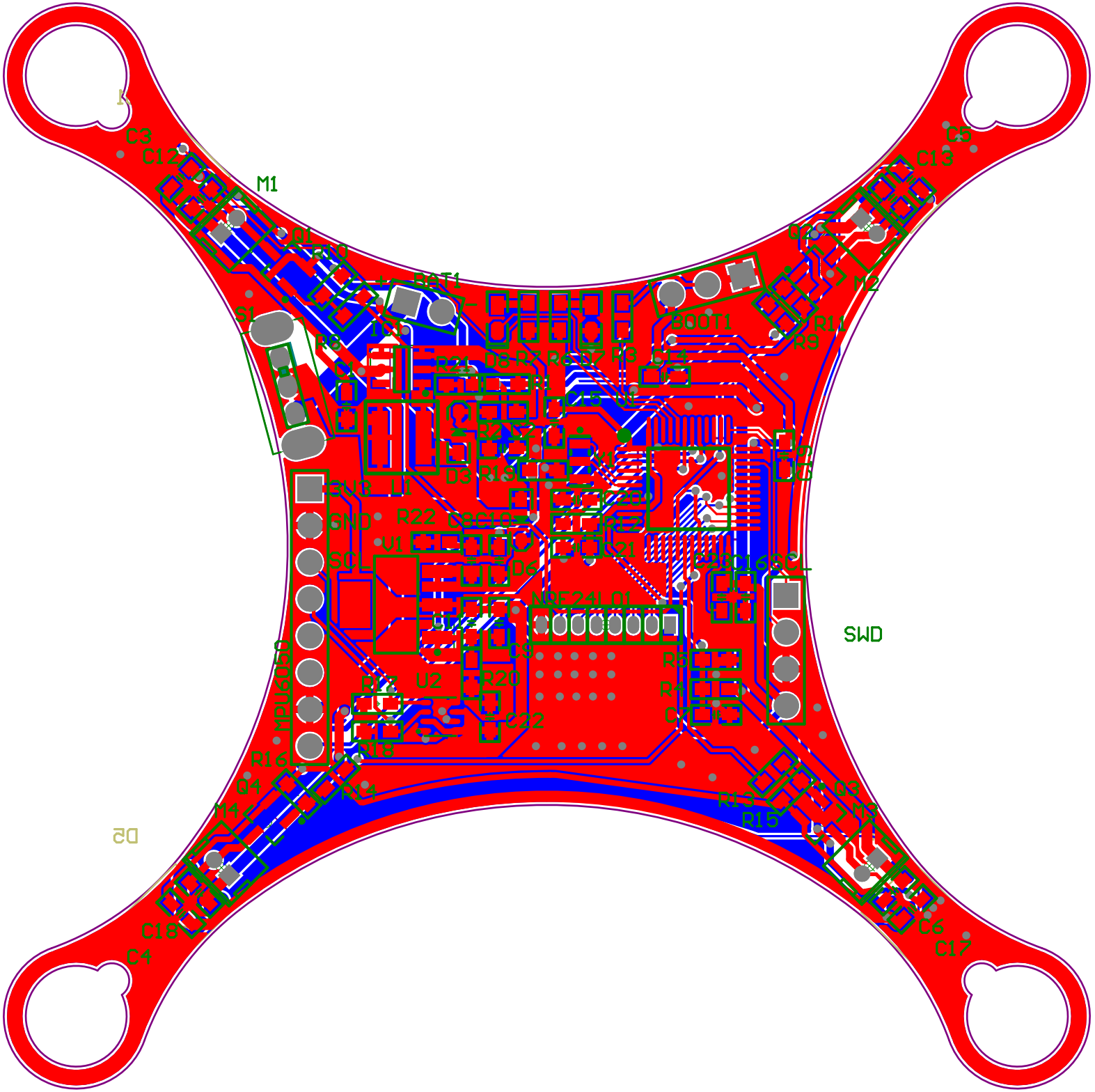

C3
C12
M1
C5
C13
M2
R11
R9
SWD
R22
U1
U2
R20
R16
Q4
R14
R15
C18
C4
C6
C17

Part List

Bill of Materials for Project [小马哥四轴改.PrjPcb] (No PCB Docume

Source Data From: 小马哥四轴改.PrjPcb

Project: 小马哥四轴改.PrjPcb

Variant: None

Report Date: 2022/8/19 10:41

Print Date: 19-Aug-22 10:41:44 AM

Designator	Comment	LibRef	Footprint	Description
BAT1	BAT	BAT	HDR2.54-LI-2P	Header, 2-Pin
BOOT1	BOOT	Header 3	HDR2.54-LI-3P	Header, 3-Pin
C1, C2, C3, C4, C5, C6, C7, C8, C9, C10, C11, C12, C13, C14, C15, C16, C17, C18, C19, C20, C21, C22, C23	C_0603	C_0603	C 0603_M	
D1, D2, D4, D5	P923D	P923D	RGB_LED_5050	
D3, D6	B5919WS	1N5819	SOD-323	肖特基二极管
D7	红色	LED 0603	LED 0603B	发光二极管
D8	绿色	LED 0603	LED 0603B	发光二极管
IC1	SX1308	SX1308	SOT23-6N	可调升压芯片
L1	Inductor	Inductor	SWPA4012S	电感
M1, M2, M3, M4	Motor_720	Motor_720	ZH1.5-LI-2p	Motor, General Kind
MPU6050	HDR-1X8	Header 8	HDR2.54-LI-8P	8P接插件
NRF24L01	HDR-1X8	Header 8	HDR1.27-LI-8P	8P接插件
Q1, Q2, Q3, Q4	SI2302	SI2302	SOT23-3M	N-Channel Pow er MOSFET
R1, R2, R3, R4, R5, R6, R7, R8, R9, R10, R11, R12, R13, R14, R15, R16, R17, R18, R19, R20, R21, R22	R_0603	R_0603	R 0603_M	
S1	SW-SPDT	SW-SPDT	SW-TH_OS102011MS2QN1	SPDT Subminiature Toggle Sw itch, Right Angle Mounting, Vertical Actuation
SWD	HDR-1X4	Header 4	HDR2.54-LI-4P	4P接插件
U1	STM32F103C8T6	STM32F103C8T6	LQFP48-7*7	
U2	FBM320\BMP280\SPL06	FBM320	SENSOR-TH_BMP280-BL	气压计
V1	AMS1117-3V3	AMS1117	SOT223_L	三端稳压芯片
Y1	XTAL	XTAL_2	OSC-SMD_3P-L3.2-W1.3-P1.20-L	