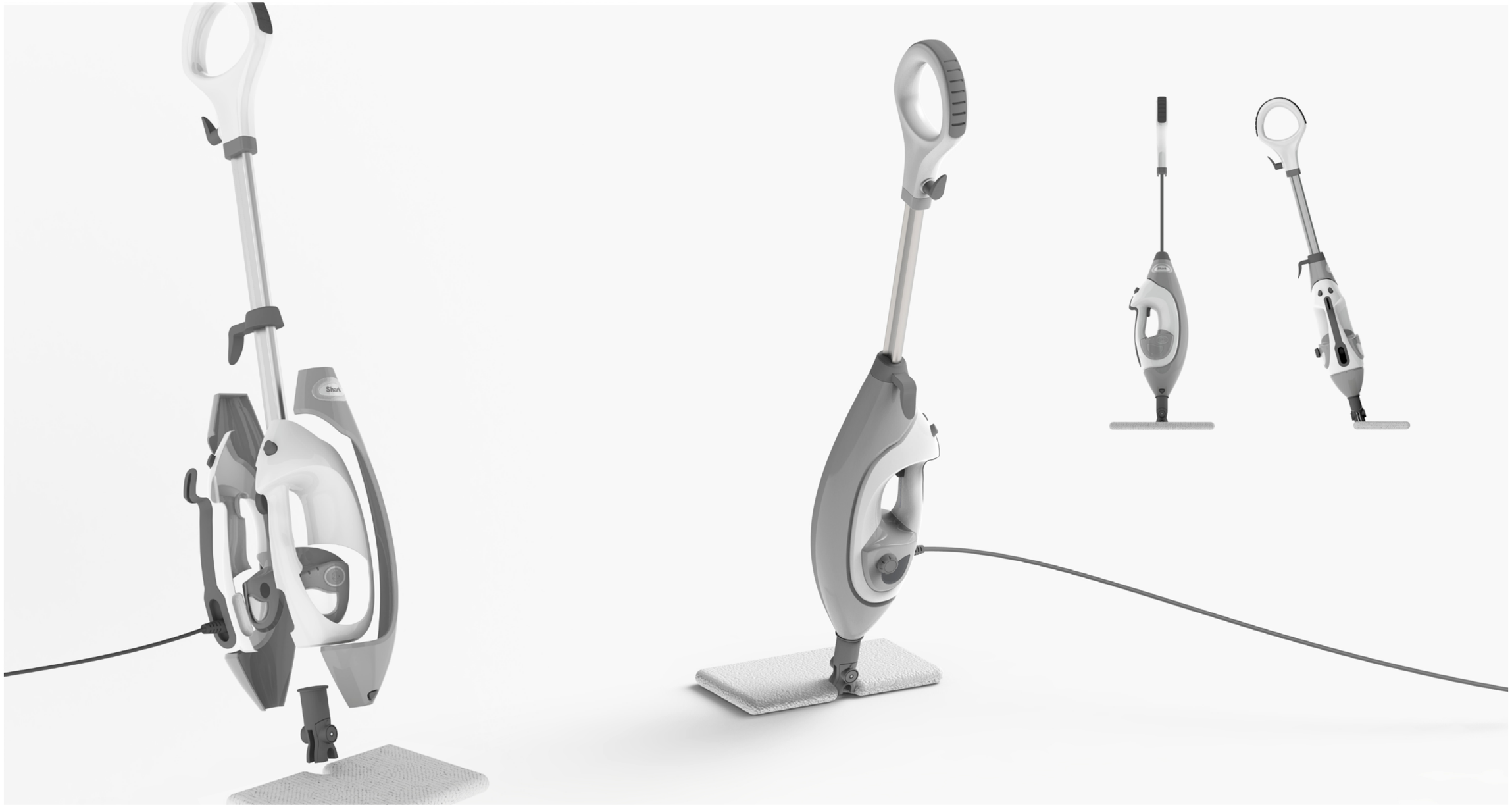

steam
control
PROFESSIONAL

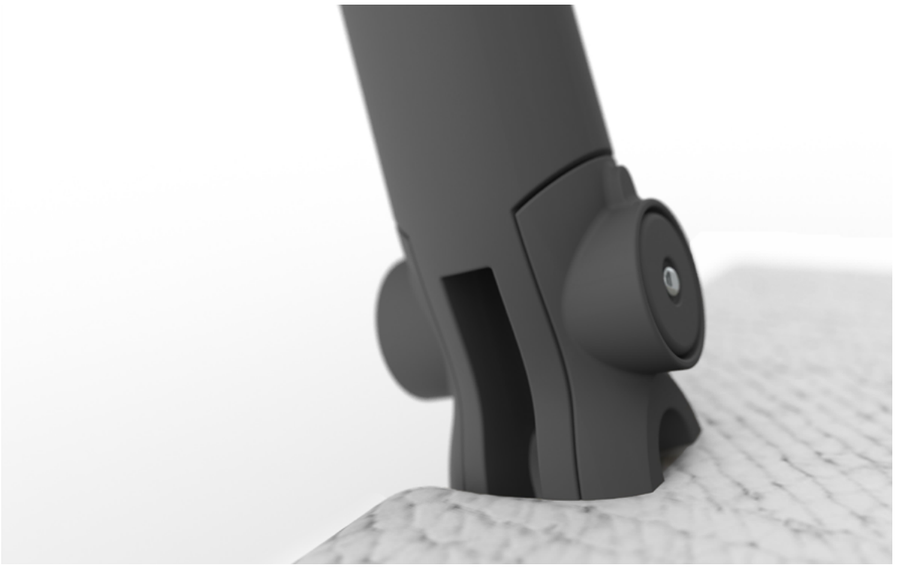

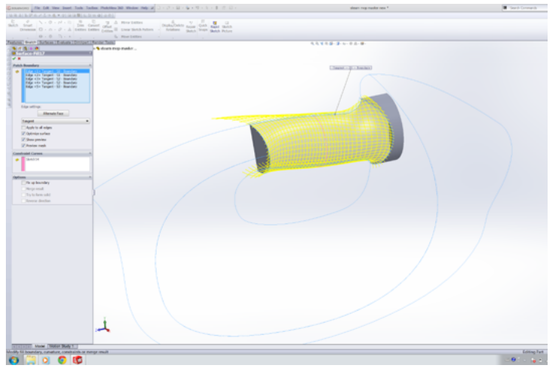

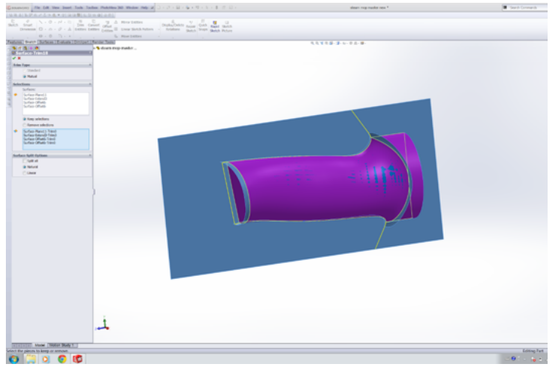

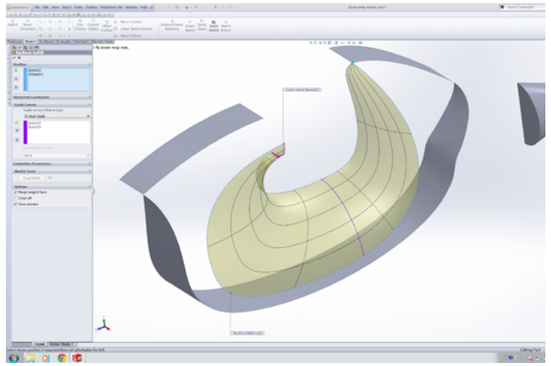

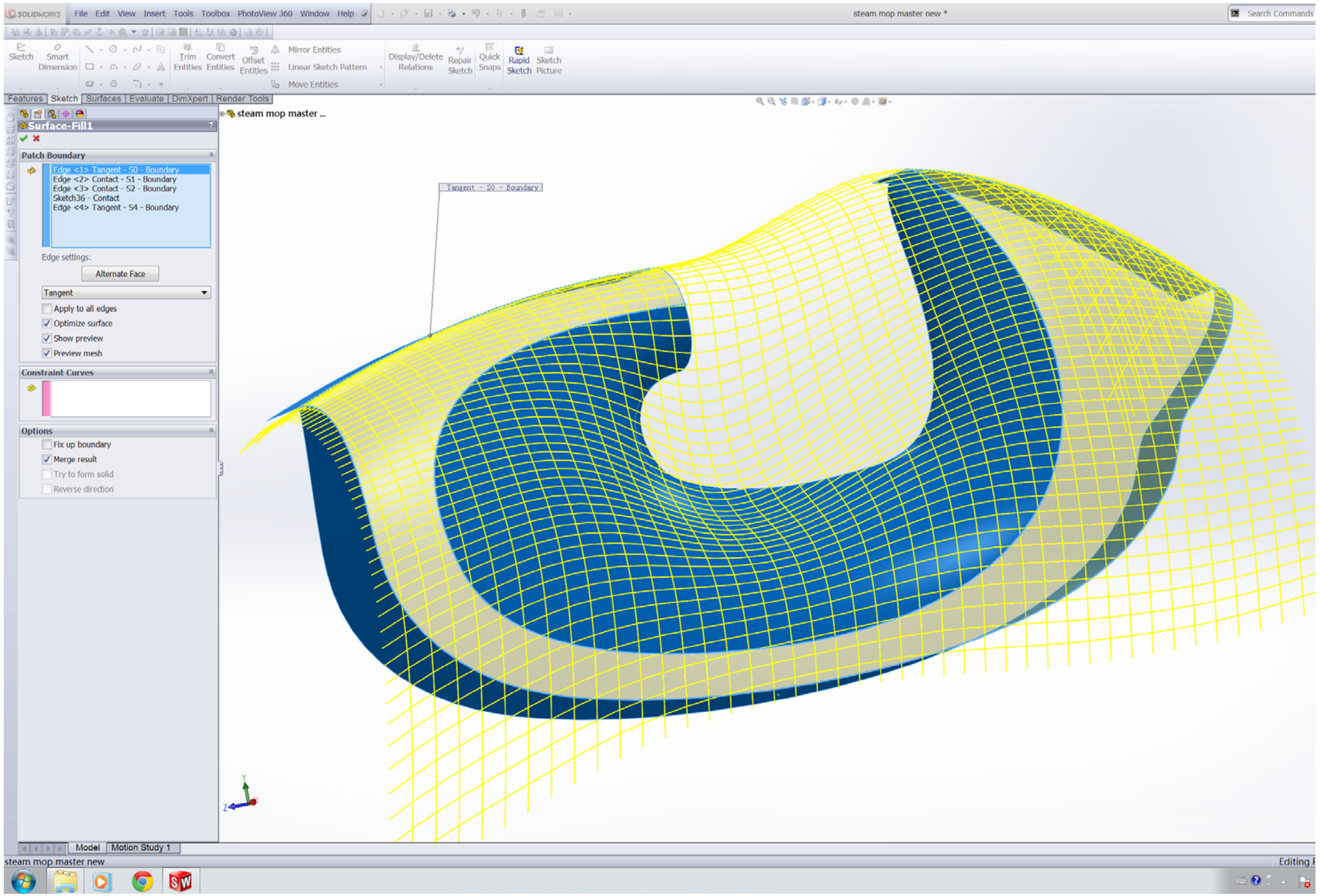
SOLIDWORKS
File Edit View Insert Tools Toolbox PhotoView 360 Window Help
steam mop master new *
Search Commands
Sketch
Smart Dimension
Trim Entities
Convert Entities
Offset Entities
Mirror Entities
Linear Sketch Pattern
Move Entities
Display/Delete Relations
Repair Sketch
Quick Snaps
Rapid Sketch
Sketch Picture
Features Sketch Surfaces Evaluate DimXpert Render Tools
Surface-Fill1
Patch Boundary
Edge <1> Tangent - S0 - Boundary
Edge <2> Contact - S1 - Boundary
Edge <3> Contact - S2 - Boundary
Sketch36 - Contact
Edge <4> Tangent - S4 - Boundary
Edge settings:
Alternate Face
Tangent
Apply to all edges
Optimize surface
Show preview
Preview mesh
Constraint Curves
Options
Fix up boundary
Merge result
Try to form solid
Reverse direction
steam mop master ...
Tangent - S0 - Boundary
Model
Motion Study 1
steam mop master new
Editing

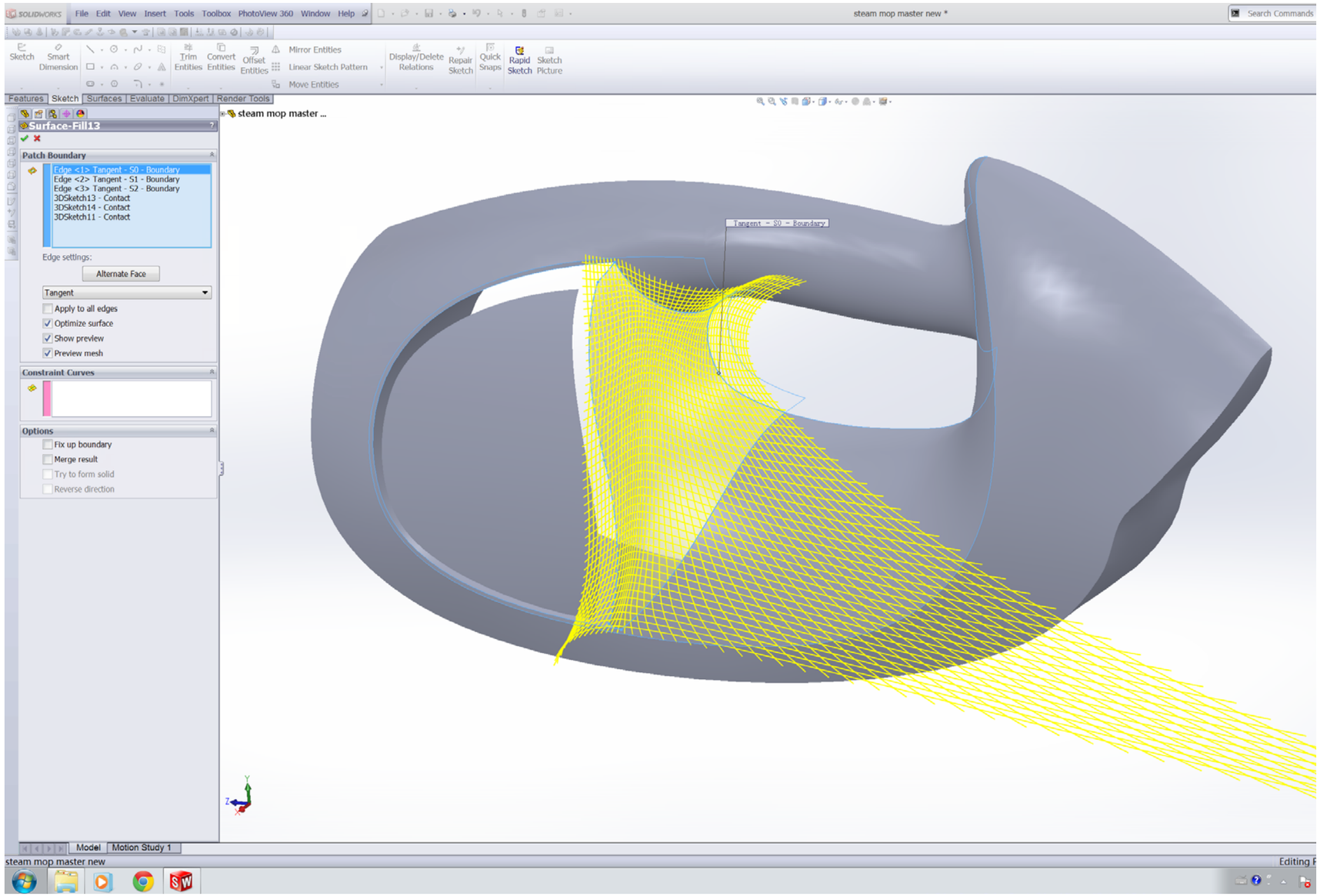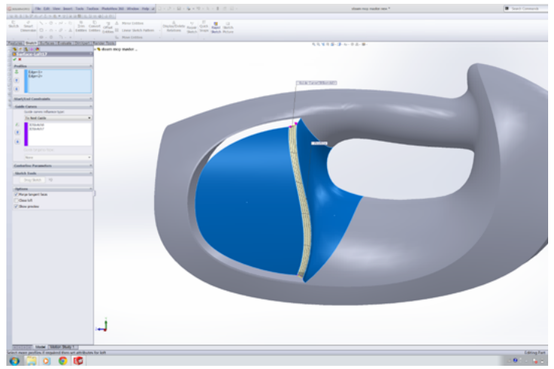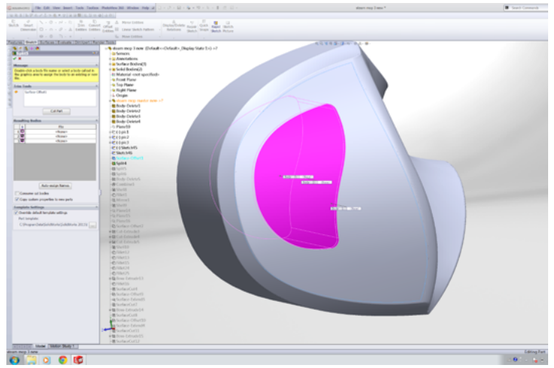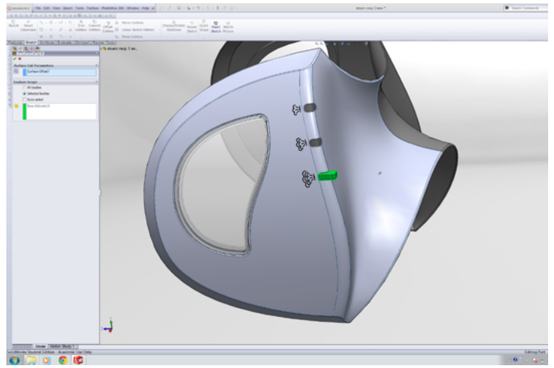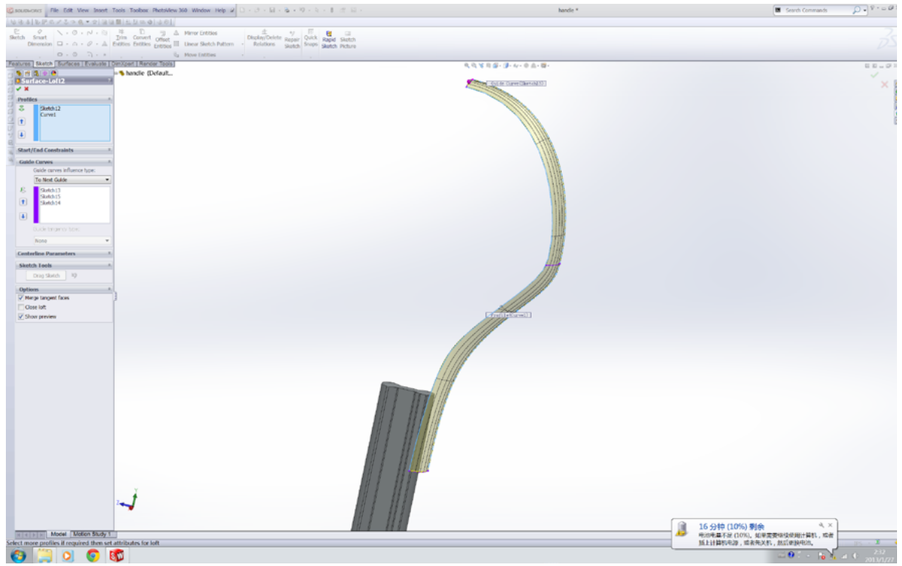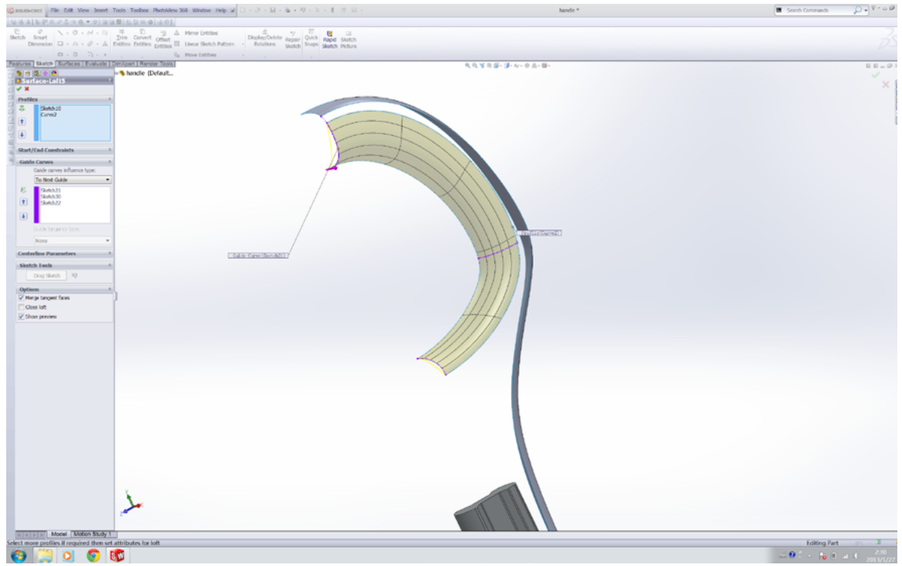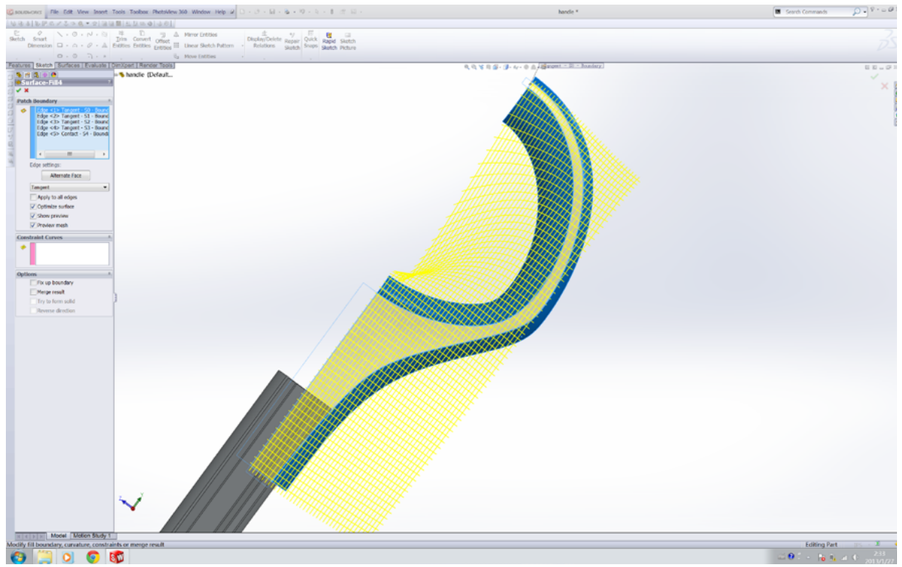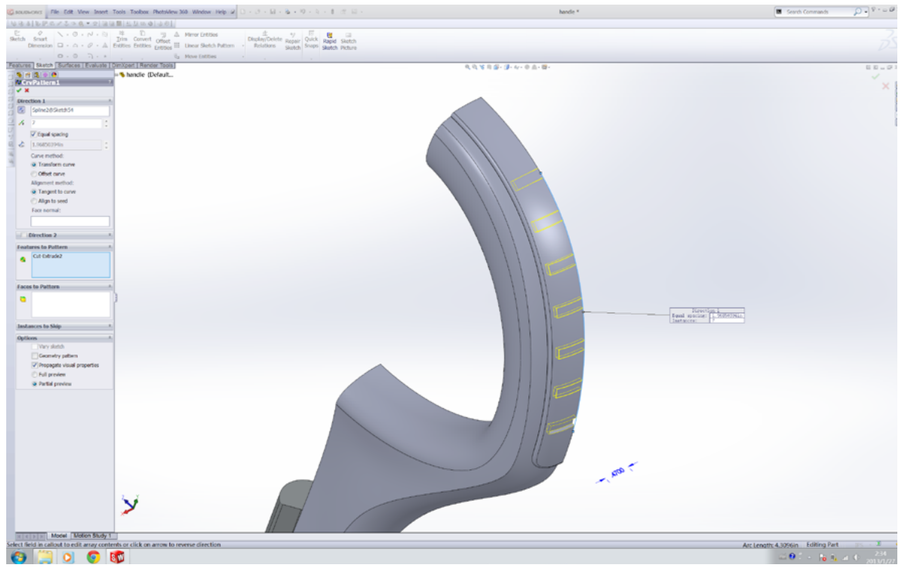
SOLIDWORKS
File Edit View Insert Tools Toolbox PhotoView 360 Window Help
steam mop master new *
Search Commands
Sketch
Smart Dimension
Trim Entities
Convert Entities
Offset Entities
Mirror Entities
Linear Sketch Pattern
Move Entities
Display/Delete Relations
Repair Sketch
Quick Snaps
Rapid Sketch
Sketch Picture
Features Sketch Surfaces Evaluate DimXpert Render Tools
Surface-Fill13
Patch Boundary
Edge <1> Tangent - S0 - Boundary
Edge <2> Tangent - S1 - Boundary
Edge <3> Tangent - S2 - Boundary
3DSketch13 - Contact
3DSketch14 - Contact
3DSketch11 - Contact
Edge settings:
Alternate Face
Tangent
Apply to all edges
Optimize surface
Show preview
Preview mesh
Constraint Curves
Options
Fix up boundary
Merge result
Try to form solid
Reverse direction
steam mop master ...
Tangent - S0 - Boundary
Model
Motion Study 1
steam mop master new
Editing P