Design and Implementation of a Distributed Neural Controller for Posture and Locomotion of an Insect-like Robot

Nicholas Szczecinski

Abstract

The purpose of this work is to produce a posture and locomotion controller for a six-legged robot based on insect neural systems. The controller will be a continuous-time biological neural network (BNN) whose organization, neural dynamics, and functionality will be heavily based in neuroethological knowledge and related models of animals. Mimicking the distributed structure of insect nervous systems, network connectivity will be developed to control single leg joints, which share information to coordinate whole legs, subject to inputs from higher command centers that control the entire body's posture. Where available, animal network connectivity will be used; otherwise, networks will be designed to perform specific reflexes or behaviors. These may serve as hypotheses of how insect motor control networks are laid out. Design tools will be developed to tune the dynamics of BNNs so that networks produce signals useful for controlling a robot. This includes analyzing central pattern generators (CPGs) as well as networks that compare, filter inputs or map between values. The resulting network will be implemented with the AnimatLab Robotics Toolkit (ART) to control a 28 degree of freedom robot MantisBot, whose proportions and degrees of freedom mimic those of an adult male mantis *Tenodera sinensis*. Using joint position and strain measurements from the legs, MantisBot will support its own weight on four or six legs. MantisBot will use its leg and body joints to orient photovoltaic sensors in its head toward "prey," represented by a flashlight. MantisBot will use reflexes based on sensory information and CPGs to remain upright when perturbed, and transition to locomotion by changing the sensitivity of these reflexes.

Contents

Abstract 0
Background 2
Insect Leg Anatomy 2
Insects as Models for Robotic Posture and Locomotion 3
Biologically Inspired Robot Controllers 5
Neuromechanical Simulations 5
Network Tuning versus Model Based Control 7
Neural Models 8
Specific Aims 9
Completed Work and Remaining Work 10
Aim 1 Publications 10
Aim 1 Completed Work 10
Aim 1 Remaining Work 12
Aim 2 Publications 13
Aim 2 Completed Work 13
Aim 2 Remaining Work 15
Aim 3 Publications 20
Aim 3 Completed Work 21
Aim 3 Remaining Work 21
References 25

Background

Mobile robots benefit from having legs on uneven terrain. Legs, unlike wheels, enable robots to step over, around, or through obstacles. Legs also enable robots to use different coordination patterns between their joints to produce drastically different locomotion for different scenarios. Legs are inherently biological, and their design and control may be best understood by observing animals, who as a group possess a wide range of geometries and control strategies. Better understanding how animals control their locomotion, then, directly benefits mobile robotics, enabling human engineers to apply control principles that are the result of eons of evolution.

Insect Leg Anatomy

Insects have four main segments per leg, moving distally from the thorax: coxa, trochanter, femur, and tibia. They also have a flexible, multi-segmented tarsus. Joints between them are labeled as such: thoraco-coxa (ThC), coxa-trochanter (CTr), trochanter-femur (TrF), femur-tibia (FTi), and tibia-tarsus (TiTar). Some of these joints are fused in some legs of some species. For instance, cockroaches have a fully-mobile three degree of freedom (DOF) ThC joint on their front legs, but only two DOF on the middle and one on the hind. Additionally, many

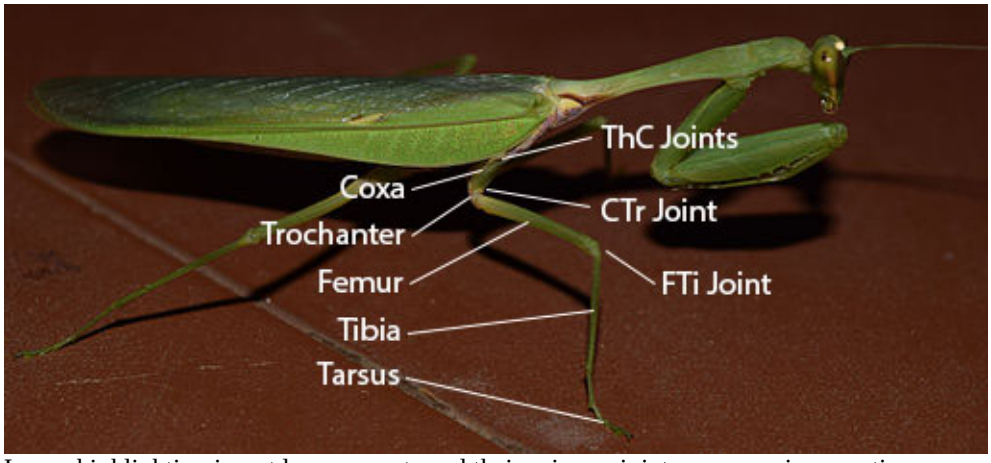

Figure 1 – Image highlighting insect leg segments and their primary joints on a praying mantis.

insects have a fused TrF joint. For this work, the ThC joints, the CTr joint, and the FTi joint are those of interest. Figure 1 illustrates these segments and joints on a praying mantis.

Insects as Models for Robotic Posture and Locomotion

There are many possible model animals for studying the control of posture and locomotion, in two main groups: vertebrates (Aschenbeck, 2006; Hyun, Seok, Lee, & Kim, 2014; Ijspeert, Crespi, Ryczko, & Cabelguen, 2007; Spröwitz, Ajallooeian, Tuleu, & Ijspeert, 2014), and invertebrates (Chiel, Beer, Quinn, & Espenschied, 1992; Dirk & Frank, 2007; Nelson & Quinn, 1998; Schneider, Paskarbeit, Schaeffersmann, & Schmitz, 2012; von Twickel, Büschges, & Pasemann, 2011). Insects, which have six legs, are advantageous to use as robotic models because they can always remain statically stable, even when moving at their highest speeds (Delcomyn, 1971). Early hexapod robots from the Quinn group made use of local reflexes and highly distributed controllers to produce a full range of gaits (Beer, Chiel, Quinn, & Espenschied, 1992), search for footholds, cross gaps, and climb over obstacles (Espenschied, Quinn, Beer, & Chiel, 1996). These robots exploited the inherent stability of insect-like posture to successfully cross challenging terrain with only tactile exteroceptors.

Since then, great advances have been made in understanding how insect nervous systems control locomotion and transition between different modes, such as standing still, walking forward, backward, and along a curved path. Insects control locomotion via a system of sensory-coupled oscillators called central pattern generators (CPGs) (Büschges, Schmitz, & Bässler, 1995; Ryckebusch & Laurent, 1993). Each joint in each leg has its own CPG. Sensory signals such as joint motion (Bucher, Akay, DiCaprio, & Büschges, 2003; Hess & Büschges, 1997, 1999) and leg strain (Akay, Haehn, Schmitz, & Büschges, 2004; Zill, Schmitz, & Büschges, 2004) provide feedback to the oscillators, adjusting their relative phase and producing coordinated motion. Drastic changes in coordination, such as those seen while insects turn or

walk backward, are thought to be the result of reflex reversals (RR), wherein a sensory input causes the opposite transition in a CPG (Akay & Büschges, 2006; Hellekes, Blincow, Hoffmann, & Büschges, 2011; Hess & Büschges, 1999; Mu & Ritzmann, 2008; Ridgel, Alexander, & Ritzmann, 2007; Szczecinski, Brown, Bender, Quinn, & Ritzmann, 2013). Stimulating areas of the brain whose activity correlates to walking direction can evoke a RR (Guo & Ritzmann, 2013). Other behavioral transitions, such as switching from standing still to walking, are the result of a RR between negative and positive velocity feedback in individual joint controllers (Hellekes et al., 2011).

Insects and robots must also establish communication between their legs to properly time steps and form gaits. Much behavioral data on insect inter-leg coordination exists (Cruse, 1990; Dürr, Schmitz, & Cruse, 2004), but less is known about the neural communication that produces it (Borgmann, Hooper, & Büschges, 2009; Tóth et al., 2015). Inter-leg coordination rarely resembles the clean gaits people visualize, such as a tripod gait, and is better described as probability distributions than hard and fast rules (Dürr & Ebeling, 2005). The front legs, which experience the world first in a forward-walking insect, appear to be the most volitional (Grabowska, Godlewska, Schmidt, & Daun-Gruhn, 2012). When the animal changes direction, the front legs change their direction during stance before the other legs, “pulling” the others along (Dürr & Ebeling, 2005). In addition, the CPGs in the middle and hind legs only activate when a front leg is actively stepping (Borgmann et al., 2009). Additional behavioral data from arthropods (Bender et al., 2011; Cruse, 1990) suggest that more rules may be encoded in the nervous system to help coordinate leg speed and positioning, but most coordination is likely the result of sensory driven leg-level controllers, mechanically coupled through the ground (Borgmann et al., 2009; Zill, Keller, & Duke, 2009). All of these findings suggest that posture

and locomotion are controlled via distributed neural structures that depend on feedback from sensors as well as descending commands from higher command centers.

Biologically Inspired Robot Controllers

Recent biologically inspired hexapod robots have benefitted from increased biological knowledge, resulting in more complete controllers (Dirk & Frank, 2007; Lewinger & Quinn, 2010; Schneider et al., 2012; Szczecinski, Chrzanowski, Cofer, Moore, et al., 2015; von Twickel et al., 2011). Finite state machine controllers, like those on Robot II and BILL-ANT from the Quinn group, captured some of the reflexes seen in animals, but are rigid in their behaviors and difficult to tune or analyze because of their discontinuous dynamics. Other robots such as Octavio (von Twickel et al., 2011) and Hector (Schneider et al., 2012) are controlled by networks of simple "neuroid" models that possess limited internal dynamics. These models are useful because many techniques exist for setting parameters to match observed animal behavior, and both of these robots replicate many behaviors seen in insects. However, the neurons' limited complexity does not enable the engineers to take advantage of what is known about CPG dynamics and how these rhythms may be coordinated (Daun-Gruhn, 2010; Tóth et al., 2015).

Neuromechanical Simulations

Modern day understanding of insect nervous systems coupled with widespread computer power enables scientists to build more detailed dynamical models of insects and their control systems (Borgmann & Büschges, 2015; Schilling, Hoinville, Schmitz, & Cruse, 2013; Szczecinski et al., 2013; Szczecinski, Martin, Ritzmann, & Quinn, 2014). As laid out in (Buschmann, Ewald, Twickel, & Büschges, 2015), there are two main approaches to neuromechanical modeling, "morphological" and "functional". Morphological models start with known neuroanatomy, add hypothetical structures to fill gaps in knowledge, and attempt to replicate animal behavior. Functional models start with animal behavior, ignore known

neuroanatomy, and build a system that captures the animal behavior well. These will be compared and contrasted.

Starting with known neuroanatomy is difficult because only a limited amount of information is available. Therefore it is up to the modeler to analyze the behavior of smaller networks, like CPGs (Daun-Gruhn, Rubin, & Rybak, 2009), and then apply this knowledge to make networks whose behavior is tractable, and mimics the dynamics of animal neural networks. The work of Silvia Daun-Gruhn represents the most successful work of this type in insect locomotion; she has used neural dynamics to help explain gait transitions in stick insects (Daun-Gruhn & Tóth, 2010), the transition between walking forward and backward (Tóth, Knops, & Daun-Gruhn, 2012), curved walking (Knops, Tóth, Guschlbauer, Gruhn, & Daun-Gruhn, 2012), and the role of fast and slow motor neurons (Tóth, Grabowska, Schmidt, Büschges, & Daun-Gruhn, 2013). Morphological models are as simple as possible, enabling tests of necessity and sufficiency to produce certain behaviors (Daun-Gruhn & Tóth, 2010). Such minimalist networks lend themselves to dynamical system analyses such as phase response analysis (Tóth et al., 2015) because the components are well understood, and their impact on behavior is not convoluted by complicated structures.

This morphological method contrasts with the functional approach, in which networks of very simple neurons and synapses are trained with machine learning techniques to reproduce single behaviors seen in animals, and then activated or disabled by a higher level controller. Walknet, a model first developed by Holk Cruse, represents the most sophisticated insect model of this type. To illustrate how this model is “functional,” consider how each leg produces walking motion. Using animal data, separate neural networks are trained: one that can reproduce stance motion, one for swing motion, and one for the transition between swing and stance. These

three networks are then swapped in and out depending on the leg's current state, determined by a higher level controller. This approach successfully captures animal behavioral data, and has been used to control kinematic (Cruse, Kindermann, Schumm, Dean, & Schmitz, 1998) and dynamic simulations (Kindermann, 2001), as well as the robots TarryIIB (Schmitz, Schneider, Schilling, & Cruse, 2008) and Hector (Schneider et al., 2012). Walknet is an effective locomotion controller, and is a useful tool for testing qualitative hypotheses about insect behavior, i.e. insects use one leg joint to control their body height (Cruse, Riemenschneider, & Stammer, 1989). However, the resulting control network reveals little about how the animal might produce its behavior.

My work follows the morphological approach. The models used and many of the networks are based on neuroanatomy. Hypothetical structures that I implement could be sought after in the animal, and has been done so already (Ansgar Bueschges, personal correspondence).

Network Tuning versus Model Based Control

Even if the entire network structure was known, the connections' weights and other parameters still need to be determined. This process is called network tuning. Tuning the dynamics of neurobiological models to match experimental data is a difficult, high-dimensional problem. It is often done by hand (Silvia Daun-Gruhn, personal correspondence), which is time consuming. Tuning a dynamical system is more than just curve fitting, and plausible tuning is required to produce meaningful dynamics. Automating the tuning process potentially shortens the time required and enables the model to more accurately reproduce animal data (Hunt, Szczecinski, Andrada, Fischer, & Quinn, 2015). This requires a framework for running simulations of network behavior, interpreting output, and changing network parameters intelligently. As such network parameter tuning can be treated as an optimization problem, and different solvers such as Newton methods (Dennis & Schnabel, 1983), Simplex methods (Nelder

& Mead, 1965), and Genetic Algorithms (GAs) (Holland, 1975) can be used to minimize an objective that evaluates the network's performance. The method used depends on the complexity of the objective function, but combining two or more is often the most effective (El-Mihoub, Hopgood, Nolle, & Battersby, 2004).

Tuning a model "offline" is fundamentally different from alternative control methods like Model Based Control (MBC) that attempt to compute actuator forces by solving optimization problems in real time (Ames, 2012; Feng, Whitman, Xinjilefu, & Atkeson, 2014; Koolen et al., 2013; Radford et al., 2015). MBC requires huge onboard computational power and an accurate dynamic model of the robot, neither of which my work needs. My work only uses optimization techniques to calculate constant parameters that establish network dynamics such as sensory feedback gains and oscillation frequencies.

Neural Models

In this work, neurons are modeled in Animatlab 2 (Cofer et al., 2010) as conductance based nonspiking neurons with persistent sodium channels (Spardy et al., 2011). The states are their voltage *V*, sodium channel activation *m*, and sodium channel deactivation *h*. The variables *m* and *h* have homologous equations. Each neuron's states change according to:

$$C_{mem}\frac{dV}{dt} = G_{mem}\cdot(E_{rest}-V) + G_{syn}\cdot\left(E_{syn}-V\right) + G_{Na}\cdot m\cdot h\cdot(E_{Na}-V) \tag{1}$$

$$\frac{dm}{dt} = \frac{m_{\infty}(V)-m}{\tau_m(V)} \tag{2}$$

$$\frac{dh}{dt} = \frac{h_{\infty}(V)-h}{\tau_h(V)} \tag{3}$$

where *C* is capacitance, *G* is conductivity, *E* is a static reference voltage (reversal potential), *τ* is a time constant, and subscript *mem* stands for membrane, *syn* stands for synapse, *Na* stands for sodium, and ∞ stands for steady state. Both $m_{\infty}(V)$ and $h_{\infty}(V)$ are sigmoidal functions, but

$m_\infty(V)$ increases monotonically with V, and $h_\infty(V)$ decreases monotonically with V. In addition, $\tau_m \ll \tau_h$, which means that initial rises in voltage are first positively reinforced by m, and then resisted as h decreases over time. Neurons communicate via synapses by changing their conductivity:

$$G_{syn} = \begin{cases} 0 & V < E_{lo} \\ G_{\max} \cdot \dfrac{V - E_{lo}}{E_{hi} - E_{lo}} & V \geq E_{lo} \; and \; V \leq E_{hi} \\ G_{\max} & V > E_{hi} \end{cases} \tag{4}$$

where V is the presynaptic neuron's voltage, and $G_{\max}$, E_{hi}, and E_{lo} are properties of the synapse.

Specific Aims

Aim 1 – Construct a suite of software accompanying the open-source simulator AnimatLab 2 that can change system parameters, run simulations, and collect data. This will be used for testing and tuning parameters to better characterize neuromechanical systems, and select parameters that produce desired simulation behavior.

Aim 2 – Construct neuromechanical models of insects to study selected postural and locomotion tasks: static posture through a distributed controller, directed postural adjustments through descending commands and muscle synergies, forward locomotion by coordinating CPGs at each joint, and transitioning between standing and walking by using descending commands to modulate leg controllers. The tools from Aim 1 will be used to tune these models.

Aim 3 – Combine the functionality of the networks in Aim 2 to control the posture and locomotion of a hexapod robot.

Completed Work and Remaining Work

Aim 1 Publications

Hunt, A. J., Szczecinski, N. S., Andrada, E., Fischer, M. S., & Quinn, R. D. (2015). Using Animal Data and Neural Dynamics to Reverse Engineer a Neuromechanical Rat Model. In Biomimetic and Biohybrid Systems.

Szczecinski, N. S., Hunt, A. J., & Quinn, R. D. (2015). Phase Characterization of Hyperpolarizing and Depolarizing Currents on a Four Neuron CPG Model. In ICRA 2015: CPGs for Locomotion Control.

Aim 1 Completed Work

Optimization programs search a parameter space to find values that make the system in question produce desirable behavior. Quantifying "desirability" with an objective function to minimize allows a computer to guess parameters, observe system performance, and use this observation to wisely pick new parameters that should improve performance. When the parameter space is complicated, methods that evaluate system performance many times may be necessary, either to approximate derivatives (Dennis & Schnabel, 1983) or take a large sample of the parameter space (Holland, 1975). This repeated evaluation motivates using objective functions that are as simple and fast to compute as possible and still yield good results. Because of this, in my preliminary work I have developed two separate software packages in Matlab (Mathworks, Natick, MA) for tuning neural, synaptic and muscular parameters: a steady-state program (SSP) that operates on fast-to-compute, steady-state models, and a full-dynamics program (FDP) that tunes complete, dynamical simulations when steady-state models are insufficient.

SSP imports an AnimatLab simulation file and generates a kinematic map of the animat, which is used to calculate Jacobians and solve inverse kinematics problems. It also imports the location of muscle attachments and computes muscle lengths and velocities for given poses and motions. This information can be used to tune maps between joint angle and muscle length, an abstraction of insect chordotonal organ function (Field & Matheson, 1998). Using the leg

Jacobian, muscle attachment locations and the body mass, antagonistic muscles can be tuned to provide support forces in worst case poses. Because all of these parameters are tuned with simple models, a model with 7,000 parameters (500 neurons, 1000 synapses, 48 muscles) can be tuned to produce a static posture controller in less than 40 minutes (Szczecinski et al., 2014).

If desired walking kinematics and ground reaction forces (GRFs) are provided, SSP can be used to tune connections between sensory neurons, CPGs, and motor neurons (MNs) to produce the desired motion and forces. In simultaneous work by Alexander Hunt, a neuromechanical model of a rat was tuned to produce animal-like walking. In stance phase, the GRFs and leg Jacobians were used to approximate torques acting at the joints. As in Szczecinski et al. (2014), the kinematics were used to find muscle lengths and vectors, determining both active and passive muscle forces, and therefore MN and CPG activations required for walking. After analyzing CPG responses to sensory inputs (Szczecinski, Hunt, & Quinn, 2015), connections were tuned from sensory neurons to the CPGs, with the goal of producing the required CPG activation for walking when the sensory input matched the animal's. With only minimal hand-tuning, the model produced stable locomotion like the animal's (Hunt et al., 2015).

FDP was developed to avoid future hand-tuning. It combines an AnimatLab simulation with a user-written objective function into a function handle in Matlab, enabling rapid testing of parameters' effects on full simulations. This tool was used to perform numerical phase response analysis on a commonly-used CPG model, revealing that excitatory and inhibitory inputs evoke different phase responses (Szczecinski, Hunt, et al., 2015). This information was directly leveraged to produce CPG-based reflexes in a hexapod robot MantisBot, allowing it to

automatically adjust its posture when leg forces were too high or too low, or search for ground contact (Szczecinski, Chrzanowski, Cofer, Terrasi, et al., 2015).

I also used this program to examine the sensitivity of a task-level posture controller for a praying mantis model (Szczecinski, Martin, Bertsch, Ritzmann, & Quinn, 2015). By sweeping feedback gains and thresholds, a model was made to use its legs to move its body toward prey while keeping its feet stationary. Parameters were found that produced accurate motion at speeds similar to those seen in the animal.

Aim 1 Remaining Work

With FDP, the behavior of full neuromechanical simulations may now be optimized. For example, sensory pathways that coordinate CPGs could be tuned to produce coordination patterns observed in the animal (Hunt et al., 2015). Such a problem might have between 10 and 100 parameters, although there is no limit in principle. The resulting parameter space would likely be very complicated, requiring global (Holland, 1975) or gradient-less optimization methods (Nelder & Mead, 1965) to solve. For such complicated problems, hybrid methods are often used (El-Mihoub et al., 2004), first using a global search method like a genetic algorithm (GA) followed by a gradient-less method like the Nelder-Mead (NM) simplex method. These methods will be implemented and refined for use in tuning neural systems controlling dynamic simulations.

The success of these methods, however, is highly dependent on the objective function to be minimized. Simply minimizing the least squares difference between the desired periodic motion and the simulation's output does not yield good results unless additional terms are added to penalize frequency and/or amplitude. Additionally, parameters are often required to stay within bounds, and may have constraints that relate them to others. These can be enforced by adding penalties to the objective function that quantify the violation of boundaries or constraints,

and gradually increasing their importance as the optimization progresses (Griva, Nash, & Sofer, 2009). This improves the accuracy of the results.

The increased accuracy, however, often comes at the expense of additional function evaluations. Dynamic simulations can take a long time to run, and running thousands or tens-of-thousands of simulations may be time prohibitive. This motivates modifying optimization methods to reduce runtime. For example, a GA lends itself to parallelization, because each iteration requires the evaluation of a large "population" of possible solutions. Using Matlab's Parallel Computing Toolbox, I will parallelize my GA to reduce runtime. In addition, duplicate solutions often appear in GAs, especially as the population converges and becomes uniform. Further runtime decreases will come from avoiding evaluating duplicate solutions. These improvements will make a GA a useful tool for minimizing complex objectives, such as ensuring that particular sensory conditions elicit desired reflexes, or that different joints' motion are separated by a desired phase angle.

Aim 2 Publications

Szczecinski, N. S., Brown, A. E., Bender, J. A., Quinn, R. D., & Ritzmann, R. E. (2013). A Neuromechanical Simulation of Insect Walking and Transition to Turning of the Cockroach Blaberus discoidalis. Biological Cybernetics. doi:10.1007/s00422-013-0573-3

Szczecinski, N. S., Martin, J. P., Ritzmann, R. E., & Quinn, R. D. (2014). Neuromechanical Mantis Model Replicates Animal Postures via Biological Neural Models. Biomimetic and Biohybrid Systems, (3), 296–307.

Szczecinski, N. S., Martin, J. P., Bertsch, D. J., Ritzmann, R. E., & Quinn, R. D. (2015). Neuromechanical Model of Praying Mantis Explores the Role of Descending Commands in Pre-Strike Pivots. Bioinspiration & Biomimetics, Accepted.

Aim 2 Completed Work

I started my work in the Quinn Lab developing a distributed neural control system for a simulated cockroach (Szczecinski et al., 2013). This work had two main outcomes. The first was establishing a four-layered model structure for controlling rhythmic activity in walking insects: a sensory layer transduces motion and forces acting on the legs; a sensory integration layer

combines different sensory influences; CPGs, whose timing is controlled by the sensory integration layer, produce rhythmic signals for locomotion; joint controllers that produce muscle force, which are driven rhythmically by the CPGs. Figure 2 illustrates this structure.

The second major outcome of this work was to show that a network of distributed oscillators could explain the phase changes of some joints when cockroaches transitioned from walking straight to along a curved path. Because the CPGs are primarily connected by sensory

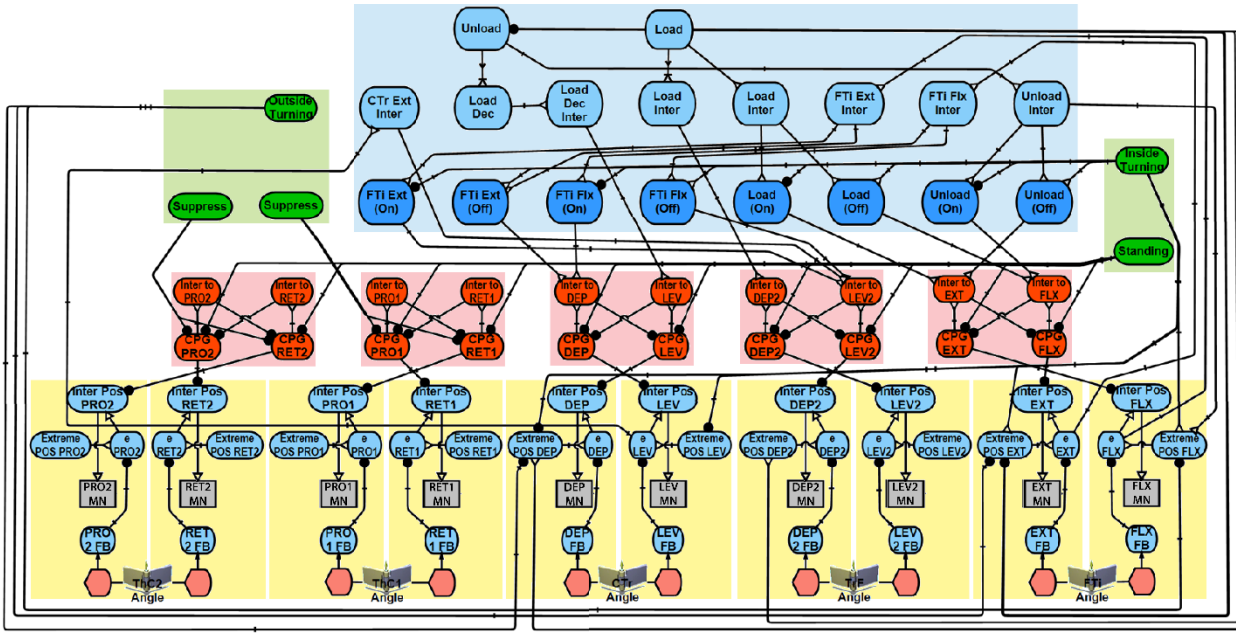

Figure 2 – Hypothetical control network for the middle leg of a cockroach from (Szczecinski et al., 2013). Sensory information is encoded in sensory neurons (blue). These influence CPG timing at each joint (red) to coordinate stepping. CPGs change the gain of muscle control comparators (yellow), generating oscillatory motion. The descending command neurons (green) can influence sensory interneurons (dark blue) to reverse reflexes and transition to turning.

feedback, this requires using descending commands to modulate the strength of some pathways. With additional descending commands to the MNs, the direction of travel could be adjusted. In sum, a network that is built to produce forward running could be modulated by descending inputs to produce inside and outside turning motions as well.

My focus then shifted to the praying mantis, which primarily stands still for camouflage while hunting. When hungry, mantises may keep their feet still and use their legs, body joints, and neck to rotate and translate their heads toward prey. In contrast to the cockroach running

model, feedback control of every joint was necessary. Therefore the major outcome of this work was a biologically plausible neuromuscular joint controller, and a task-level posture controller that interfaced with these controllers, strongly based in insect motor control (Szczecinski, Martin, et al., 2015). Each leg's height is servo-controlled as observed in insects, and head position and rotation is controlled by setting reference values that represent the location of prey in the visual field. The errors from these reference values are encoded as descending commands from the head to the thoracic networks, which produce corrective joint torques. The dependence on feedback makes the controller adaptable, enabling the model to replicate pivots as large as those made by the animal from a variety of starting poses.

Aim 2 Remaining Work

Much is known about how insects control their joints, coordinate their joints to move their legs, and use descending commands to modulate leg activity. The neural controller in this work is intended both to be a robot controller and a hypothesis of how thoracic networks that control insect locomotion are organized. The proposed controller will have network structure whose joint controllers mimic the biological findings listed in Table 1, whose leg controllers mimic the findings in Table 2, and uses descending commands like those in Table 3 to modulate behavior.

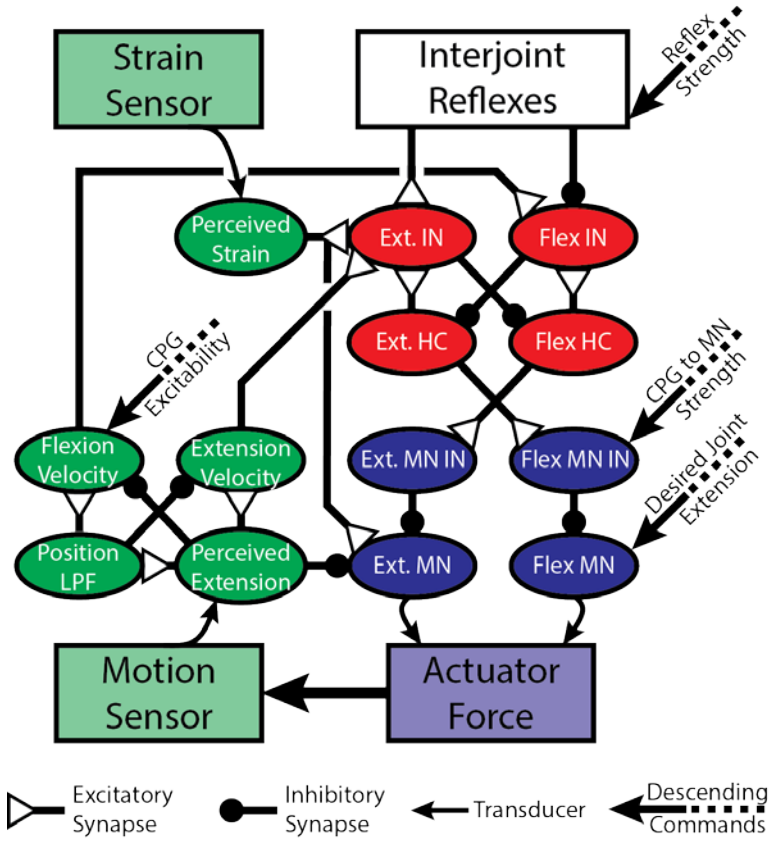

Figure 3 – A diagram of each joint's control network. A CPG (red) provides oscillatory inhibition to the motorneurons (MNs) (violet). MNs cause actuator force, which causes motion that is registered by the network (green). Strain input is also used to modulate output force (green). Interjoint reflexes coordinate joints within a leg (white). Descending commands modulate the network to control positioning and oscillation. IN is an abbreviation of Interneurons.

The network diagram in Figure 3 will be used to capture the observations in Table 1. Each joint possesses a CPG (red) that inhibits the MNs (violet) through parallel pathways of nonspiking neurons. Due to the negative position feedback to the MNs and damping forces (in muscles or servomotors), the controller acts as a low pass filter. MN activity can be increased during stance by using descending commands to change the size (i.e. resistance) of the MN INs (violet), which inhibit the MNs. The reflex reversal between negative and positive feedback can be enacted by disinhibiting the velocity feedback to the CPGs.

Table 1

INSECT SINGLE-JOINT CONTROL	SOURCE
Each joint has a CPG without centralized coupling to others.	(Büschges et al., 1995)
MN activity is driven by parallel antagonistic pathways of nonspiking interneurons. The activity of some correlate with leg position, while the activity of others anti-correlate.	(Wolf & Büschges, 1995)
Due to velocity feedback and muscle filtering, the femoral chordotonal organ (fCO)-muscle feedback loop acts as a low pass filter in the inactive animal. Different insects have systems that are more sensitive to velocity or position depending on their ecological niche.	(Bässler, Büschges, Meditz, & Bässler, 1996)
Chordotonal organs signal joint position and velocity, and their signals stay within the thoracic ganglia.	(Field & Matheson, 1998)
Stance phase joint velocities, and thus animal forward speed, is modulated by increasing MN activity.	(Watson & Ritzmann, 1998)
MNs are generally depolarized, and are inhibited by CPGs.	(Büschges, Ludwar, Bucher, Schmidt, & DiCaprio, 2004)
Passive muscle and skeleton forces dominate active forces in arthropods.	(Zakotnik, Matheson, & Dürr, 2006)
The femur-tibia (FTi) joint is under negative position feedback control when the animal stands still, and positive feedback control when it walks.	(Akay, Ludwar, Göritz, Schmitz, & Büschges, 2007)
fCO feedback signal switches from negative to positive feedback when the animal transitions from standing still to walking.	(Hellekes et al., 2011)

A network like that shown in Figure 4 will coordinate the joints of each leg to produce the behaviors in Table 2. Load sensed by the trochanter campaniform sensilla (trCS) causes stance-phase reactions. FTi motion patterns CTr oscillation, coordinating their motion during

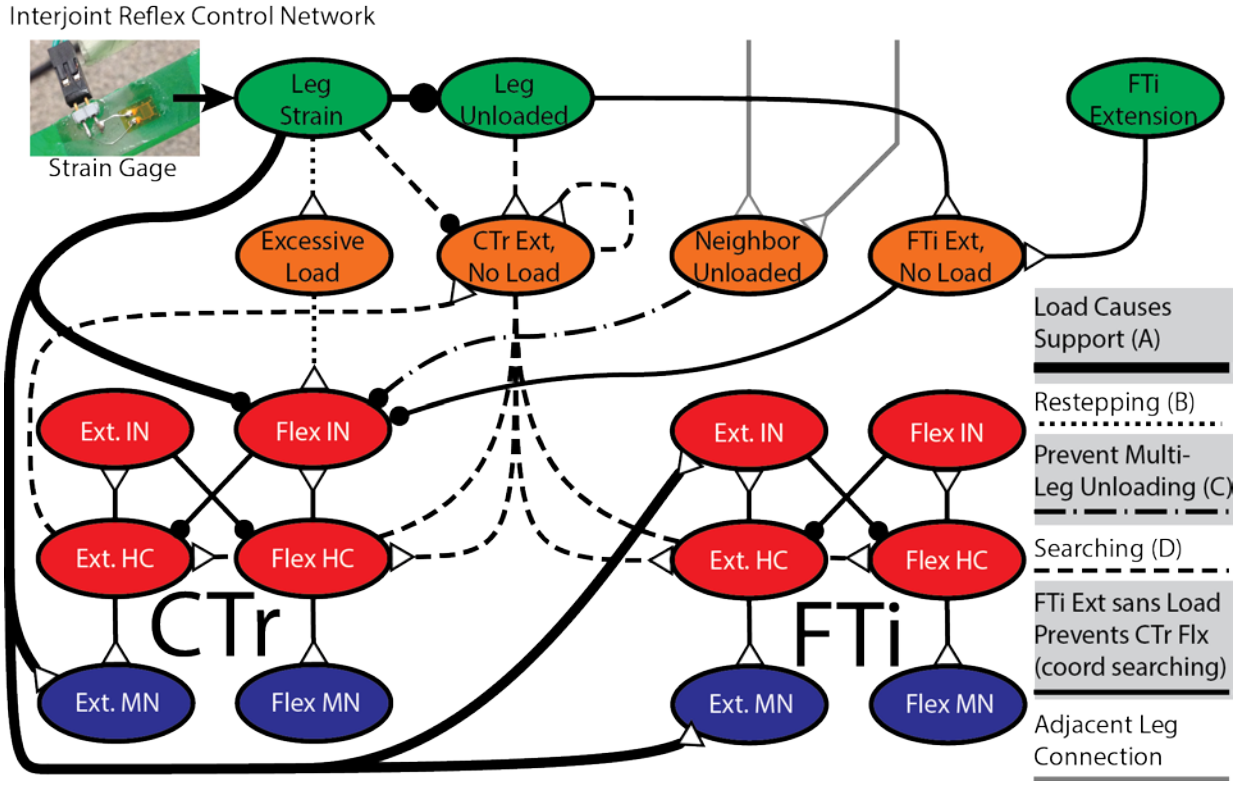

Figure 4 – A diagram of a simplified network that could be used to coordinate joints within a leg, taken from (Szczecinski, Chrzanowski, Cofer, Terrasi, et al., 2015). The proposed work will expand this network to include the ThC joints, as well as additional reflexes necessary for coordinating walking.

searching. These reflexes will also be used for locomotion; when the velocity feedback to the CPGs is disinhibited, the joints will oscillate, coordinated by these reflexes. Additional pathways will be added to coordinate the proximal ThC joints based on load information, enabling forward propulsion. Reflex strengths will also be modulated between static posture and forward locomotion, but ultimately the same network will control both states, as in insects.

Table 2

INSECT SINGLE-LEG CONTROL	SOURCE
Each leg controls its height separately from other legs.	(Cruse et al., 1989)
A leg can restep when under excessive load to improve posture.	(Zill & Frazier, 1992)
FTi extension depolarizes stance phase muscles in the CTr joint.	(Hess & Büschges, 1997)
FTi motion patterns CTr oscillation, and moving the FTi to extreme positions will halt CTr rhythm.	(Hess & Büschges, 1999)
FTi MNs are modulated by fCS and tibial CS activity.	(Akay, Bässler, Gerharz, & Büschges, 2001)
When transitioning to walking, whether the leg enters swing or stance depends on the FTi position.	(Bucher et al., 2003)
trCS is the most important load sensor for determining stance.	(Noah, Quimby, Frazier, & Zill, 2004)
FTi phase reverses in the middle leg on the inside of a turn.	(Mu & Ritzmann, 2005)
Loading information causes FTi flexion or extension depending on whether the animal is walking forward or backward.	(Hellekes et al., 2011)
The same networks appear to control both static posture and active locomotion; the same sensory signals are used, but modulated by higher command centers.	(Buschmann et al., 2015)

Finally, the observations in Table 3 will be used to develop pathways between the legs and from higher command centers to coordinate all of the legs. Inter-leg influences are thought to be very weak in insects, and as such only minimal connections will be implemented between the legs, in the form of shared loading information between legs. Locomotion speed and direction changes will be caused by descending commands that modulate the connections between the CPGs and MNs. In extreme cases, descending commands may reverse reflexes, such as while making tight turns or walking backwards.

Table 3

INSECT MULTI-LEG CONTROL AND DESCENDING COMMANDS	SOURCE
Decreasing load signals from the CS correlate with touchdown of the ipsilateral posterior leg.	(Zill et al., 2009)
Sensory feedback from load sensors in the front legs initiates stepping motion in the middle and hind legs.	(Borgmann et al., 2009)
Spiking frequency in some regions of the central brain region called the central complex (CX) precede changes in locomotion speed.	(Bender, Pollack, & Ritzmann, 2010)
Visual information causes the legs to pivot the body in the direction of prey.	(Yamawaki, Uno, Ikeda, & Toh, 2011)
Asymmetrical activity in the CX precedes turns in that direction.	(Guo & Ritzmann, 2013)

The design tools in Aim 1 will be used to tune the control networks in a bottom-up fashion. First, the motor- and sensory neurons of each single joint controller will be tuned to produce the joint torques and ranges of motion needed based on animal data and worst case loading conditions. Next, the CPG parameters will be set for sensitive switch-like behavior. This will enable sustained oscillation when the velocity feedback is disinhibited by descending commands. The phase response, frequency, and amplitude of the oscillating controller will then be numerically calculated for different velocity feedback strengths and CPG to MN strengths.

Inverse kinematics or animal data, if available, will be used to find joint angle trajectories for each leg that produce appropriate foot trajectories relative to the body. Superfluous degrees of freedom will be handled by adding additional constraints, such as the coupling observed between the CTr and FTi joints in stick insects (Hess & Büschges, 1997). The desired kinematics will be fed through the sensory neurons, and connections to the CPGs in the leg will be weighted to produce the desired transitions. This encodes the proper stepping reflexes into the network without the network simply following predetermined trajectories (Hunt et al., 2015).

Aim 3 Publications

Szczecinski, N. S., Chrzanowski, D. M., Cofer, D. W., Moore, D. R., Terrasi, A. S., Martin, J. P., Ritzmann, R. E., Quinn, R. D. (2015). MantisBot: A Platform for Investigating Mantis Behavior via Real-Time Neural Control. In Living Machines.

Szczecinski, N. S., Chrzanowski, D. M., Cofer, D. W., Terrasi, A. S., Moore, D. R., Martin, J. P., Ritzmann, R.E., Quinn, R. D. (2015). Introducing MantisBot: Hexapod Robot Controlled by a High- Fidelity, Real-Time Neural Simulation. In IEEE International Conference on Intelligent Robots and Systems.

Aim 3 Completed Work

In completed work I oversaw the construction of a mantis-inspired robot (Chrzanowski, 2015), integrated and tuned low-level electronics and software (Szczecinski, Chrzanowski, Cofer, Moore, et al., 2015), and demonstrated that a simulated neural system of this type can control a robot in real time and give a robot stabilizing reflexes (Szczecinski, Chrzanowski, Cofer, Terrasi, et al., 2015). The robot consists of 28 Dynamixel Smart Servos (Robotis, South Korea) arranged in a 13.3:1 scale of a male praying mantis. In addition to position and velocity information from the servos, the robot also uses strain gage on the proximal end of the femur to measure femoral deflection. The neural control system is implemented via the AnimatLab Robotics Toolkit, which links actuators and sensors to those in a simulation, allowing the user to test controllers on a rigid-body model of the robot, and enabling me to use the design tools discussed in Aim 1 Completed Work to find approximate controller parameters for the robot.

As a first step to unify the two controllers described in Aim 2 Completed Work, a postural controller was designed in which the CPGs that control most joints are tuned to be at the bifurcation leading to sustained rhythmic activity. This has two benefits. First, the CPGs act like switches in this configuration, enabling sensory signals to cause rapid changes in joint direction, for example, to lift the leg when the leg strain is excessive. Second, the CPGs can be activated into rhythmicity with the application of a small amount of descending drive, enabling searching when ground contact is expected but not detected.

Aim 3 Remaining Work

In order to further apply the controllers from Aim 2 to a robot, some special considerations need to be made. Preliminary results from MantisBot produced rough, jerky

motion, which caused leg vibration, producing noisy feedback. Infrequent motor updates caused each servo to reach its commanded position long before the next update, leading to step-like motion. To eliminate this problem, the motor speed will be limited to the change in the commanded angle times the refresh rate.

Unlike a rigid-body simulation, a robot is flexible. Therefore we can use strain sensors similar to the campaniform sensilla (CS) on insect legs. These provide analog feedback about the weight on each leg, which will be used to produce positive force feedback for load compensation as observed in insects (Noah, Quimby, Frazier, & Zill, 2001). The surface strain of the proximal end of a beam is proportional to the external bending moment (Gere, 2004), suggesting that a feedforward strain sensor-to-motor neuron (MN) connection may be tuned to automatically cancel forces applied to the leg. It is also known that this reflex is only active when the leg makes a resisted motion (Zill, Chaudhry, Büschges, & Schmitz, 2013), which may limit noise due to inertia-induced vibration. These mechanisms will be investigated, and if fruitful, additional strain sensors will be added to the tibiae (as found in the animal), allowing the CTr and FTi joint in each leg to estimate and counteract external forces.

This force cancellation is especially important when directed postural adjustments are made via descending commands. Using a previously-developed posture control network (Szczecinski, Martin, et al., 2015) and the light-sensitive head sensor seen in Figure 5, MantisBot will move its leg and body joints to direct its head toward “prey,” represented by a bright light. The head sensor indicates total luminosity as a proxy for prey proximity. It also indicates the azimuth and elevation of the centroid of luminosity, which will be used to send “rotate left,” “rotate right,” “rear upward” or “pitch downward” descending commands to the leg controllers. These commands and local feedback will proportionally activate motor synergies to move the

head toward the target. Local force feedback will aid balance, and excessive forces will cause reflexive steps to reduce the load on the legs.

Mantises more aggressively chase prey when they are hungry (Inoue & Matsura, 1983). If a hungry mantis observes prey moving away from it, it will transition from static camouflage to active pursuit. MantisBot will detect this scenario, i.e. receding prey after a proximity threshold is crossed, via its head sensor, and transmit descending commands that enable positive velocity feedback at the joints and increase the strength of inter-joint reflexes necessary for walking. As in the static prey tracking case, the descending command will be analog, causing MantisBot to walk faster after more distant prey by increasing the strength of the connection between CPGs and MNs (Rosenbaum, Schmitz, Schmidt, & Bueschges, 2015; Watson & Ritzmann, 1998). The result will be a robot that autonomously reverses reflexes to change controller modes (i.e. from static posture to active locomotion, and vice versa), controlled entirely by a dynamical neural system based on insect neuroanatomy.

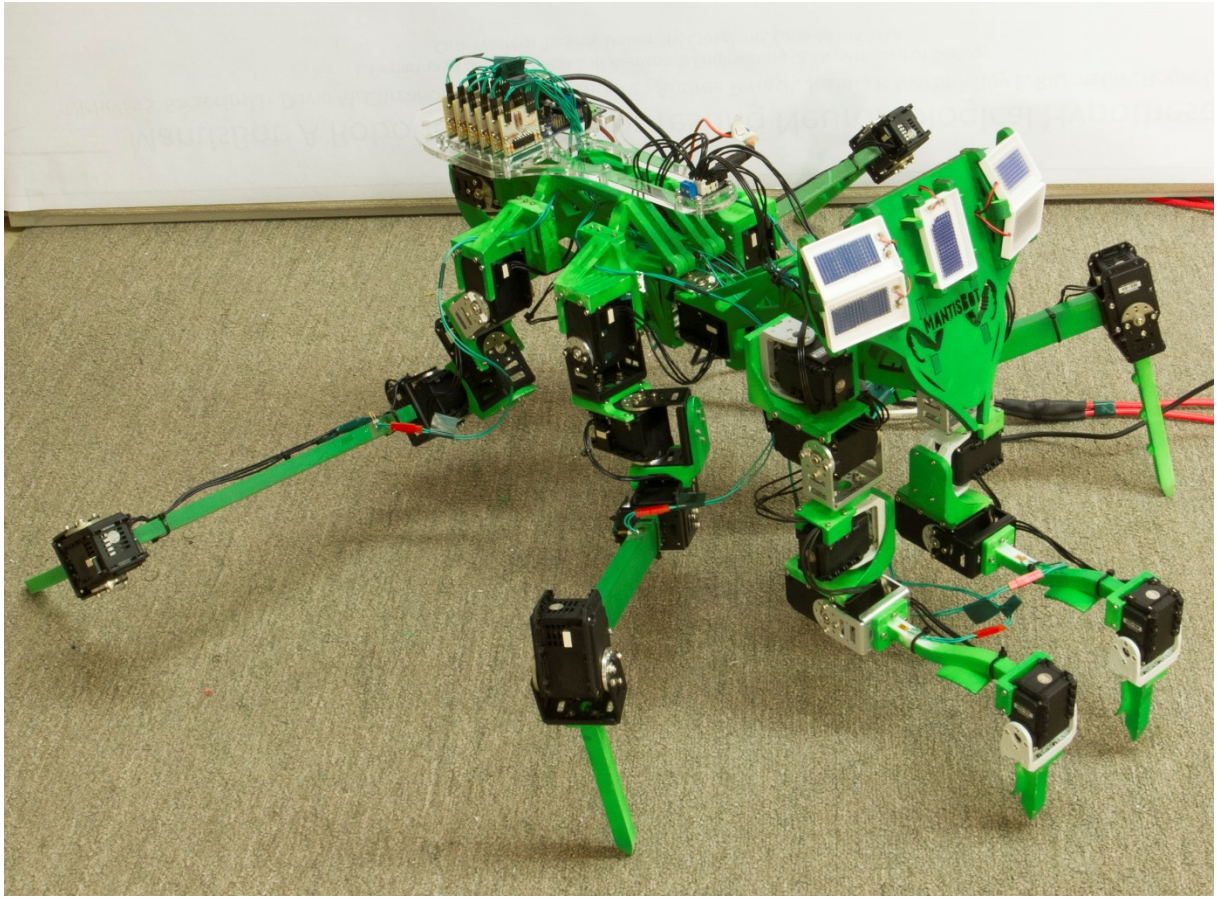

Figure 5 – A photograph of MantisBot supporting its weight on four legs.

References

Akay, T., Bässler, U., Gerharz, P., & Büschges, A. (2001). The role of sensory signals from the insect coxa-trochanteral joint in controlling motor activity of the femur-tibia joint. *Journal of Neurophysiology*, *85*(2), 594.

Akay, T., & Büschges, A. (2006). Load signals assist the generation of movement-dependent reflex reversal in the femur-tibia joint of stick insects. *Journal of Neurophysiology*, *96*(6), 3532–3537.

Akay, T., Haehn, S., Schmitz, J., & Büschges, A. (2004). Signals from load sensors underlie interjoint coordination during stepping movements of the stick insect leg. *Journal of Neurophysiology*, *92*(1), 42–51.

Akay, T., Ludwar, B. C., Göritz, M. L., Schmitz, J., & Büschges, A. (2007). Segment specificity of load signal processing depends on walking direction in the stick insect leg muscle control system. *The Journal of Neuroscience*, *27*(12), 3285–3294.

Ames, A. D. (2012). First steps toward underactuated human-inspired bipedal robotic walking. *Proceedings - IEEE International Conference on Robotics and Automation*, 1011–1017. doi:10.1109/ICRA.2012.6225360

Aschenbeck, K. S. (2006). *Design of a Quadruped Robot Driven by Air Muscles (Master's thesis)*. Case Western Reserve University.

Bässler, D., Büschges, A., Meditz, S., & Bässler, U. (1996). Correlation between muscle structure and filter characteristics of the muscle-joint system in three orthopteran insect species. *The Journal of Experimental Biology*, *199*(Pt 10), 2169–83. Retrieved from http://www.ncbi.nlm.nih.gov/pubmed/9320083

Beer, R. D., Chiel, H. J., Quinn, R. D., & Espenschied, K. S. (1992). A Distributed Neural Network Architecture for Hexapod Robot Locomotion. *Neural Computation*, *4*, 356–365.

Bender, J. A., Pollack, A. J., & Ritzmann, R. E. (2010). Neural activity in the central complex of the insect brain is linked to locomotor changes. *Current Biology*, *20*(10), 921–926. Retrieved from http://www.ncbi.nlm.nih.gov/pubmed/20451382

Bender, J. A., Simpson, E. M., Tietz, B. R., Daltorio, K. A., Quinn, R. D., & Ritzmann, R. E. (2011). Kinematic and behavioral evidence for a distinction between trotting and ambling gaits in the cockroach Blaberus discoidalis. *Journal of Experimental Biology*, *214*(12), 2057–2064. doi:10.1242/jeb.056481

Borgmann, A., & Büschges, A. (2015). Insect motor control: methodological advances, descending control and inter-leg coordination on the move. *Current Opinion in Neurobiology*, *33C*, 8–15. doi:10.1016/j.conb.2014.12.010

Borgmann, A., Hooper, S. L., & Büschges, A. (2009). Sensory feedback induced by front-leg stepping entrains the activity of central pattern generators in caudal segments of the stick insect walking system. *The Journal of Neuroscience*, *29*(9), 2972–2983. doi:10.1523/JNEUROSCI.3155-08.2009

Bucher, D., Akay, T., DiCaprio, R. A., & Büschges, A. (2003). Interjoint coordination in the stick insect leg-control system: the role of positional signaling. *Journal of Neurophysiology*, *89*(3), 1245–1255. Retrieved from http://www.ncbi.nlm.nih.gov/pubmed/12626610

Büschges, A., Ludwar, B. C., Bucher, D., Schmidt, J., & DiCaprio, R. a. (2004). Synaptic drive contributing to rhythmic activation of motoneurons in the deafferented stick insect walking system. *The European Journal of Neuroscience*, *19*(7), 1856–1862. doi:10.1111/j.1460-9568.2004.03312.x

Büschges, A., Schmitz, J., & Bässler, U. (1995). Rhythmic patterns in the thoracic nerve cord of the stick insect induced by pilocarpine. *Journal of Experimental Biology*, *198*(Pt 2), 435–456. Retrieved from http://www.ncbi.nlm.nih.gov/pubmed/9318078

Buschmann, T., Ewald, A., Twickel, A. Von, & Büschges, A. (2015). Controlling legs for locomotion—insights from robotics and neurobiology. *Bioinspiration & Biomimetics*, *10*(4), 041001. doi:10.1088/1748-3190/10/4/041001

Chiel, H. J., Beer, R. D., Quinn, R. D., & Espenschied, K. S. (1992). Robustness of a distributed neural network controller for locomotion in a hexapod robot. *IEEE Transactions on Robotics and Automation*, *8*(3), 293–303. doi:10.1109/70.143348

Chrzanowski, D. M. (2015). *MantisBot: A Robotic Platform for Development of Complex Neural Control*.

Cofer, D. W., Cymbalyuk, G., Reid, J., Zhu, Y., Heitler, W. J., & Edwards, D. H. (2010). AnimatLab: a 3D graphics environment for neuromechanical simulations. *Journal of Neuroscience Methods*, *187*(2), 280–288. doi:10.1016/j.jneumeth.2010.01.005

Cruse, H. (1990). What mechanisms coordinate leg movement in walking arthropods? *Trends in Neurosciences*, *13*(1990), 15–21.

Cruse, H., Kindermann, T., Schumm, M., Dean, J., & Schmitz, J. (1998). Walknet-a biologically inspired network to control six-legged walking. *Neural Networks : The Official Journal of the International Neural Network Society*, *11*(7-8), 1435–1447. Retrieved from http://www.ncbi.nlm.nih.gov/pubmed/12662760

Cruse, H., Riemenschneider, D., & Stammer, W. (1989). Control of Body Position of a Stick Insect Standing on Uneven Surfaces. *Biological Cybernetics*, *61*, 71–77.

Daun-Gruhn, S. (2010). A mathematical modeling study of inter-segmental coordination during stick insect walking. *Journal of Computational Neuroscience*, *30*(2), 255–278. doi:10.1007/s10827-010-0254-3

Daun-Gruhn, S., Rubin, J. E., & Rybak, I. A. (2009). Control of oscillation periods and phase durations in half-center central pattern generators: a comparative mechanistic analysis. *Journal of Computational Neuroscience*, *27*(1), 3–36. doi:10.1007/s10827-008-0124-4

Daun-Gruhn, S., & Tóth, T. I. (2010). An inter-segmental network model and its use in elucidating gait-switches in the stick insect. *Journal of Computational Neuroscience*. doi:10.1007/s10827-010-0300-1

Delcomyn, F. (1971). The Locomotion of the Cockroach Periplaneta Americana. *Journal of Experimental Biology*, *54*(2), 443–452. Retrieved from http://jeb.biologists.org/cgi/content/abstract/54/2/443

Dennis, J. E., & Schnabel, R. B. (1983). *Numerical Methods for Unconstrained Optimization and Nonlinear Equations* (1st ed.). Englewood Cliffs, New Jersey 07632: Prentice-Hall.

Dirk, S., & Frank, K. (2007). The Bio-Inspired SCORPION Robot: Design, Control & Lessons Learned. In H. Zhang (Ed.), *Climbing and Walking Robots, Towards New Applications* (pp. 197–218). Vienna, Austria: Itech Education and Publishing. doi:10.5772/5081

Dürr, V., & Ebeling, W. (2005). The behavioural transition from straight to curve walking: kinetics of leg movement parameters and the initiation of turning. *The Journal of Experimental Biology*, *208*(Pt 12), 2237–2252. doi:10.1242/jeb.01637

Dürr, V., Schmitz, J., & Cruse, H. (2004). Behaviour-based modelling of hexapod locomotion : linking biology and technical application. *Arthropod Structure & Development*, *33*, 237–250. doi:10.16/j.asd.2004.05.004

El-Mihoub, T. A., Hopgood, A. A., Nolle, L., & Battersby, A. (2004). Performance of Hybrid Genetic Algorithms Incorporating Local Search. In *Proceedings 18th European Simulation Multiconference* (Vol. 4, pp. 154–160). Magdeburg, Germany.

Espenschied, K. S., Quinn, R. D., Beer, R. D., & Chiel, H. J. (1996). Biologically based distributed control and local reflexes improve rough terrain locomotion in a hexapod robot. *Robotics and Autonomous Systems*, *18*(1-2), 59–64. doi:10.1016/0921-8890(96)00003-6

Feng, S., Whitman, E., Xinjilefu, X., & Atkeson, C. (2014). Optimization-based Full Body Control for the DARPA Robotics Challenge. *Journal of Field Robotics*. doi:10.1002/rob

Field, L. H., & Matheson, T. (1998). Chordotonal Organs of Insects. *Advances In Insect Physiology*, *27*, 1–230.

Gere, J. M. (2004). *Mechanics of Materials* (6th ed.). Thomson Learning, Inc.

Grabowska, M., Godlewska, E., Schmidt, J., & Daun-Gruhn, S. (2012). Quadrupedal gaits in hexapod animals - inter-leg coordination in free-walking adult stick insects. *Journal of Experimental Biology*, 4255–4266. doi:10.1242/jeb.073643

Griva, I., Nash, S., & Sofer, A. (2009). *Linear and Nonlinear Optimization* (2nd ed.). Philedelphia: Society for Industrial and Applied Mathematics.

Guo, P., & Ritzmann, R. E. (2013). Neural activity in the central complex of the cockroach brain is linked to turning behaviors. *The Journal of Experimental Biology*, *216*(Pt 6), 992–1002. doi:10.1242/jeb.080473

Hellekes, K., Blincow, E., Hoffmann, J., & Büschges, A. (2011). Control of reflex reversal in stick insect walking: effects of intersegmental signals, changes in direction and optomotor induced turning. *Journal of Neurophysiology*, *107*(1), 239–249. doi:10.1152/jn.00718.2011

Hess, D., & Büschges, A. (1997). Sensorimotor pathways involved in interjoint reflex action of an insect leg. *Journal of Neurobiology*, *33*(7), 891–913.

Hess, D., & Büschges, A. (1999). Role of Proprioceptive Signals From an Insect Femur-Tibia Joint in Patterning Motoneuronal Activity of an Adjacent Leg Joint. *Journal of Neurophysiology*, *81*(4), 1856–1865. Retrieved from http://www.ncbi.nlm.nih.gov/pubmed/10200220

Holland, J. H. (1975). *Adaptation in Natural and Artificial Systems*. *University of Michigan Press*. Ann Arbor, MI.

Hunt, A. J., Szczecinski, N. S., Andrada, E., Fischer, M. S., & Quinn, R. D. (2015). Using Animal Data and Neural Dynamics to Reverse Engineer a Neuromechanical Rat Model. In *Biomimetic and Biohybrid Systems*.

Hyun, D. J., Seok, S., Lee, J., & Kim, S. (2014). High Speed Trot-running : Implementation of a Hierarchical Controller using Proprioceptive Impedance Control on the MIT Cheetah, (January), 1–25. doi:10.1177/0278364914532150

Ijspeert, A. J., Crespi, A., Ryczko, D., & Cabelguen, J.-M. (2007). From swimming to walking with a salamander robot driven by a spinal cord model. *Science*, *315*(5817), 1416–1420. Retrieved from http://www.ncbi.nlm.nih.gov/pubmed/17347441

Inoue, T., & Matsura, T. (1983). Foraging Strategy of a Mantid, Paratenodera angustipennis S.: Mechanisms of Switching Tactics Between Ambush and Active Search. *Oecologia*, *56*, 264–271.

Kindermann, T. (2001). Behavior and Adaptability of a Six-Legged Walking System with Highly Distributed Control. *Adaptive Behavior*, *9*(1), 16–41. doi:10.1177/105971230200900103

Knops, S. A., Tóth, T. I., Guschlbauer, C., Gruhn, M., & Daun-Gruhn, S. (2012). A neuro-mechanical model for the neural basis of curve walking in the stick insect. *Journal of Neurophysiology*, 679–691. doi:10.1152/jn.00648.2012

Koolen, T., Smith, J., Thomas, G., Bertrand, S., Carff, J., Mertins, N., … Pratt, J. (2013). Summary of Team IHMC's Virtual Robotics Challenge Entry. *Humanoid Robots, IEEE-RAS International Conference on*.

Lewinger, W. A., & Quinn, R. D. (2010). A Hexapod Walks Over Irregular Terrain Using a Controller Adapted from an Insect's Nervous System. *IEEE Int Conf on Intelligent Robots and Systems*, 3386–3391. Retrieved from http://ieeexplore.ieee.org/xpls/abs_all.jsp?arnumber=5650200

Mu, L., & Ritzmann, R. E. (2005). Kinematics and motor activity during tethered walking and turning in the cockroach, Blaberus discoidalis. *Journal of Comparative Physiology. A, Neuroethology, Sensory, Neural, and Behavioral Physiology*, *191*(11), 1037–1054. doi:10.1007/s00359-005-0029-x

Mu, L., & Ritzmann, R. E. (2008). Interaction between descending input and thoracic reflexes for joint coordination in cockroach. II comparative studies on tethered turning and searching. *Journal of Comparative Physiology. A*, *194*(3), 299–312. doi:10.1007/s00359-007-0309-8

Nelder, J., & Mead, R. (1965). A simplex method for function minimization. *Computing Journal*, 308–313.

Nelson, G. M., & Quinn, R. D. (1998). Posture Control of a Cockroach-like Robot. In *International Conference on Robotics and Automation Video Proceedings*. Belgium.

Noah, J. A., Quimby, L., Frazier, F., & Zill, S. (2001). Force detection in cockroach walking reconsidered: discharges of proximal tibial campaniform sensilla when body load is altered. *Journal of Comparative Physiology A: Sensory, Neural, and Behavioral Physiology*, *187*(10), 769–784. doi:10.1007/s00359-001-0247-9

Noah, J. A., Quimby, L., Frazier, S. F., & Zill, S. N. (2004). Walking on a "peg leg": extensor muscle activities and sensory feedback after distal leg denervation in cockroaches. *Journal of Comparative Physiology. A, Neuroethology, Sensory, Neural, and Behavioral Physiology*, *190*(3), 217–231. doi:10.1007/s00359-003-0488-x

Radford, N. A., Strawser, P., Hambuchen, K., Mehling, J. S., Verdeyen, W. K., Donnan, S., … Ames, A. (2015). Valkyrie : NASA's First Bipedal Humanoid Robot.

Ridgel, A. L., Alexander, B. E., & Ritzmann, R. E. (2007). Descending control of turning behavior in the cockroach, Blaberus discoidalis. *Journal of Comparative Physiology a-Neuroethology Sensory Neural and Behavioral Physiology*, *193*(4), 385–402. doi:10.1007/s00359-006-0193-7

Rosenbaum, P., Schmitz, J., Schmidt, J., & Bueschges, A. (2015). Task-dependent Modification of Leg Motor Neuron Synaptic Input Underlying Changes in Walking Direction and Walking Speed. *Journal of Neurophysiology*, jn.00006.2015. doi:10.1152/jn.00006.2015

Ryckebusch, S., & Laurent, G. (1993). Rhythmic patterns evoked in locust leg motor neurons by the muscarinic agonist pilocarpine. *Journal of Neurophysiology*, *69*(5), 1583–1595. Retrieved from http://www.ncbi.nlm.nih.gov/pubmed/8389831

Schilling, M., Hoinville, T., Schmitz, J., & Cruse, H. (2013). Walknet, a bio-inspired controller for hexapod walking. *Biological Cybernetics*, *107*(4), 397–419. doi:10.1007/s00422-013-0563-5

Schmitz, J., Schneider, A., Schilling, M., & Cruse, H. (2008). No need for a body model: Positive velocity feedback for the control of an 18-DOF robot walker. *Applied Bionics and Biomechanics*, *5*(3), 135–147.

Schneider, A., Paskarbeit, J., Schaeffersmann, M., & Schmitz, J. (2012). HECTOR, a new hexapod robot platform with increased mobility-control approach, design and communication. *Advances in Autonomous Mini Robots*, 249–264. doi:10.1007/978-3-642-27482-4_24

Spardy, L. E., Markin, S. N., Shevtsova, N. A., Prilutsky, B. I., Rybak, I. A., & Rubin, J. E. (2011). A dynamical systems analysis of afferent control in a neuromechanical model of locomotion: I. Rhythm generation. *Journal of Neural Engineering*, *8*(6), 65003. doi:10.1088/1741-2560/8/6/065003

Spröwitz, A. T., Ajallooeian, M., Tuleu, A., & Ijspeert, A. J. (2014). Kinematic primitives for walking and trotting gaits of a quadruped robot with compliant legs. *Frontiers in Computational Neuroscience*, *8*(March), 27. doi:10.3389/fncom.2014.00027

Szczecinski, N. S., Brown, A. E., Bender, J. A., Quinn, R. D., & Ritzmann, R. E. (2013). A Neuromechanical Simulation of Insect Walking and Transition to Turning of the Cockroach Blaberus discoidalis. *Biological Cybernetics*. doi:10.1007/s00422-013-0573-3

Szczecinski, N. S., Chrzanowski, D. M., Cofer, D. W., Moore, D. R., Terrasi, A. S., Martin, J. P., … Quinn, R. D. (2015). MantisBot: A Platform for Investigating Mantis Behavior via Real-Time Neural Control. In *Living Machines*.

Szczecinski, N. S., Chrzanowski, D. M., Cofer, D. W., Terrasi, A. S., Moore, D. R., Martin, J. P., … Quinn, R. D. (2015). Introducing MantisBot: Hexapod Robot Controlled by a High-Fidelity, Real-Time Neural Simulation. In *IEEE International Conference on Intelligent Robots and Systems*.

Szczecinski, N. S., Hunt, A. J., & Quinn, R. D. (2015). Phase Characterization of Hyperpolarizing and Depolarizing Currents on a Four Neuron CPG Model. In *ICRA 2015: CPGs for Locomotion Control*.

Szczecinski, N. S., Martin, J. P., Bertsch, D. J., Ritzmann, R. E., & Quinn, R. D. (2015). Neuromechanical Model of Praying Mantis Explores the Role of Descending Commands in Pre-Strike Pivots. *Bioinspiration & Biomimetics*, Accepted.

Szczecinski, N. S., Martin, J. P., Ritzmann, R. E., & Quinn, R. D. (2014). Neuromechanical Mantis Model Replicates Animal Postures via Biological Neural Models. *Biomimetic and Biohybrid Systems*, (3), 296–307.

Tóth, T. I., Grabowska, M., Rosjat, N., Hellekes, K., Borgmann, A., & Daun-Gruhn, S. (2015). Investigating inter-segmental connections between thoracic ganglia in the stick insect by means of experimental and simulated phase response curves. *Biological Cybernetics*, (123). doi:10.1007/s00422-015-0647-5

Tóth, T. I., Grabowska, M., Schmidt, J., Büschges, A., & Daun-Gruhn, S. (2013). A neuro-mechanical model explaining the physiological role of fast and slow muscle fibres at stop and start of stepping of an insect leg. *PloS One*, *8*(11), e78246. doi:10.1371/journal.pone.0078246

Tóth, T. I., Knops, S., & Daun-Gruhn, S. (2012). A neuromechanical model explaining forward and backward stepping in the stick insect. *Journal of Neurophysiology*, *107*(12), 3267–3280. doi:10.1152/jn.01124.2011

Von Twickel, A., Büschges, A., & Pasemann, F. (2011). Deriving neural network controllers from neuro-biological data: implementation of a single-leg stick insect controller. *Biological Cybernetics*, *104*(1-2), 95–119. doi:10.1007/s00422-011-0422-1

Watson, J. T., & Ritzmann, R. E. (1998). Leg kinematics and muscle activity during treadmill running in the cockroach, Blaberus discoidalis: I. Slow running. *Journal of Comparative Physiology. A, Sensory, Neural, and Behavioral Physiology*, *182*(1), 11–22. Retrieved from http://www.ncbi.nlm.nih.gov/pubmed/9447710

Wolf, H., & Büschges, A. (1995). Nonspiking local interneurons in insect leg motor control. II. Role of nonspiking local interneurons in the control of leg swing during walking. *Journal of Neurophysiology*, *73*(5), 1861–75. Retrieved from http://www.ncbi.nlm.nih.gov/pubmed/7623086

Yamawaki, Y., Uno, K., Ikeda, R., & Toh, Y. (2011). Coordinated movements of the head and body during orienting behaviour in the praying mantis Tenodera aridifolia. *Journal of Insect Physiology*, *57*(7), 1010–1016. doi:10.1016/j.jinsphys.2011.04.018

Zakotnik, J., Matheson, T., & Dürr, V. (2006). Co-contraction and passive forces facilitate load compensation of aimed limb movements. *The Journal of Neuroscience : The Official Journal of the Society for Neuroscience*, *26*(19), 4995–5007. doi:10.1523/JNEUROSCI.0161-06.2006

Zill, S. N., Chaudhry, S., Büschges, A., & Schmitz, J. (2013). Directional specificity and encoding of muscle forces and loads by stick insect tibial campaniform sensilla, including receptors with round cuticular caps. *Arthropod Structure & Development*, *42*(6), 455–67. doi:10.1016/j.asd.2013.10.001

Zill, S. N., & Frazier, S. F. (1992). Characteristics of dynamic postural reactions in the locust hindleg. *Journal Of Comparative Physiology A*, *170*, 761–772.

Zill, S. N., Keller, B. R., & Duke, E. R. (2009, May). Sensory Signals of Unloading in One Leg Follow Stance Onset in Another Leg: Transfer of Load and Emergent Coordination in Cockroach Walking. *Journal of Neurophysiology*. doi:10.1152/jn.00056.2009

Zill, S. N., Schmitz, J., & Büschges, A. (2004). Load sensing and control of posture and locomotion. *Arthropod Structure & Development*, *33*(3), 273–286. doi:10.1016/j.asd.2004.05.005