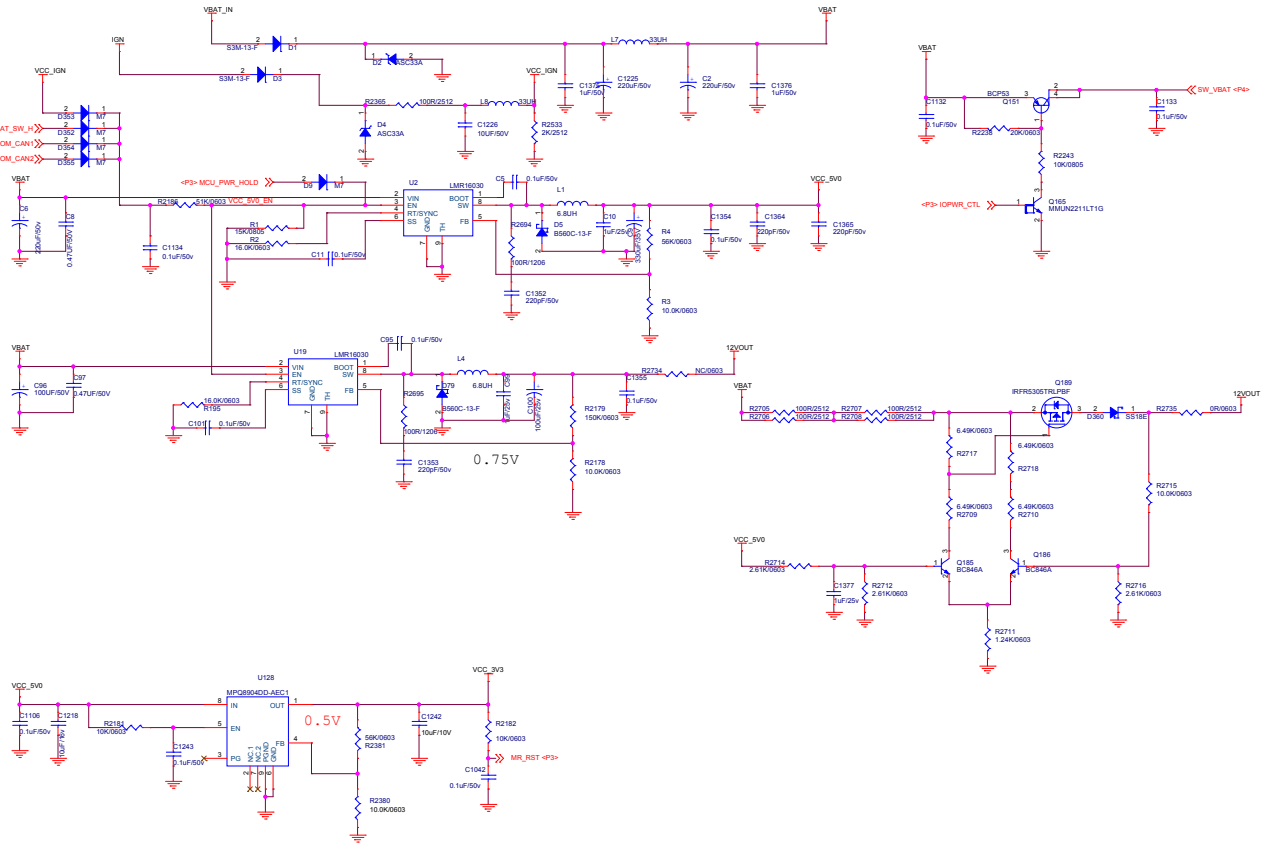

Fab Number:

PCB,Draco-KT1A-C1 4 layer PCB

Shanghai Fangyan			
Title	ZB299		
Size Custom	Document Number <Doc>		Rev 2.0
Date: Monday, December 02, 2019	Sheet 1 of 10		

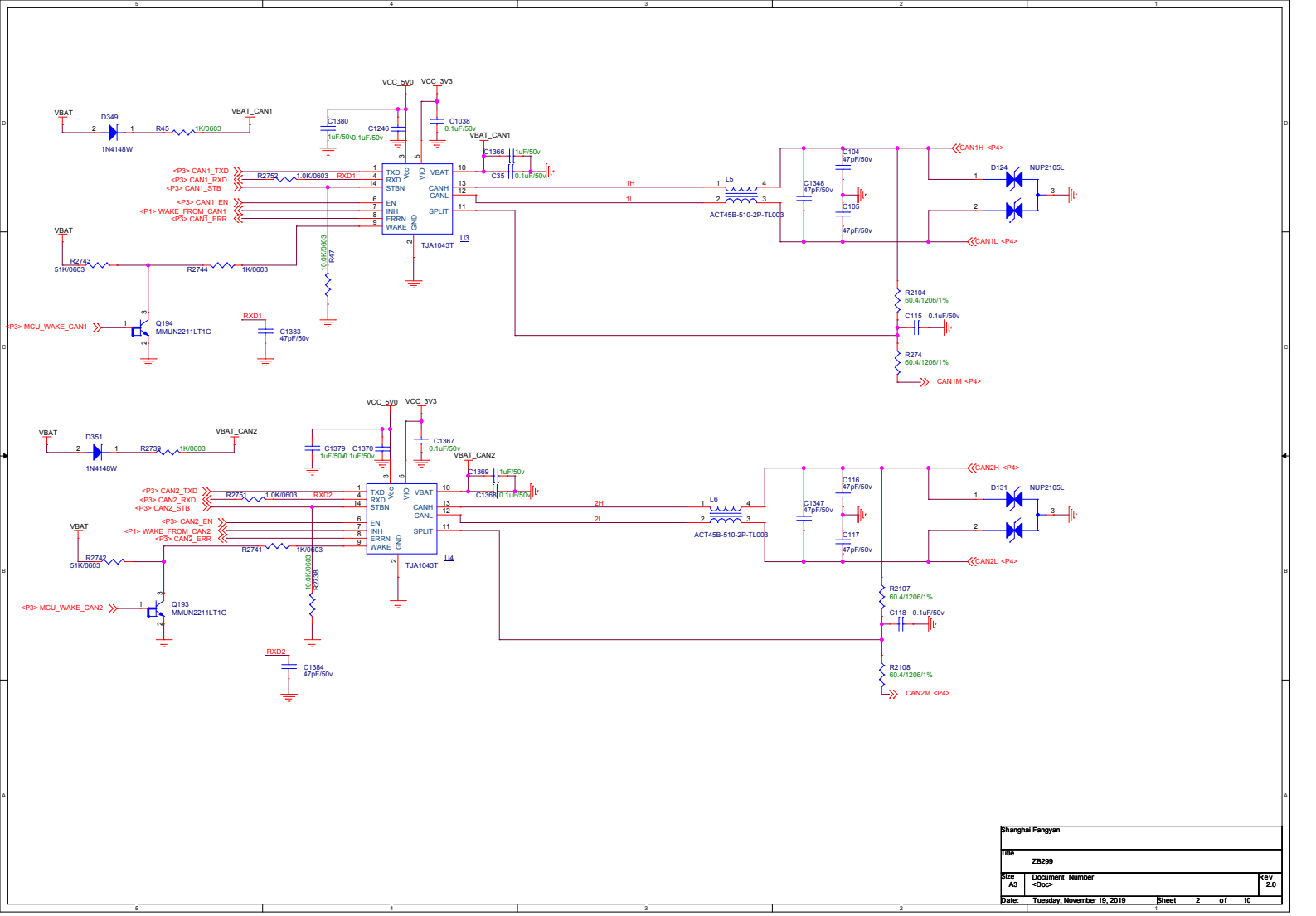

Shanghai Fangyan			
Title	ZB299		
Size A3	Document Number <Doc>		Rev 2.0
Date: Tuesday, November 19, 2019	Sheet 2 of 10		

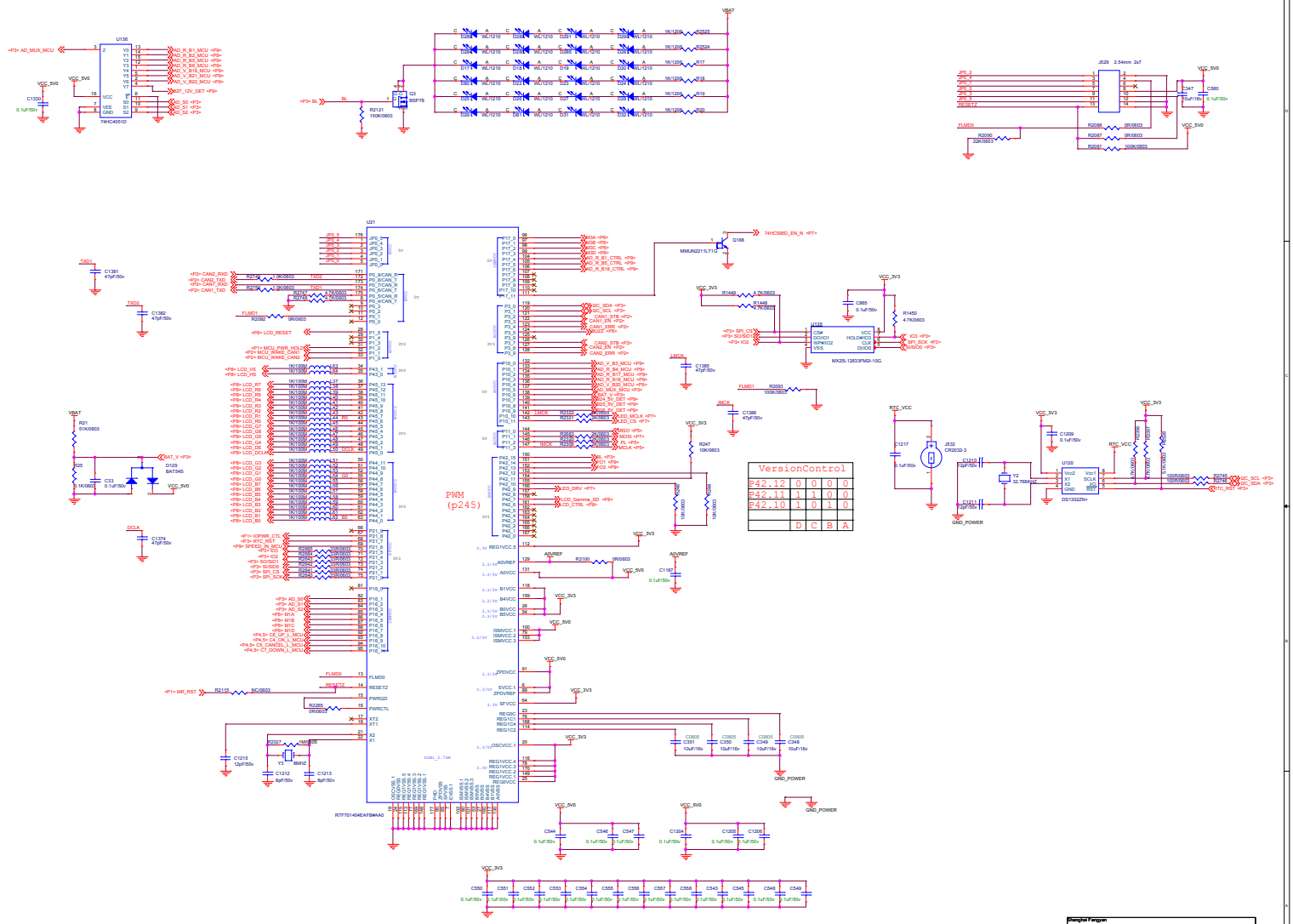
U136
74HC4051D
VBAT
JS29 2.54mm 2x7
U21
PWM
(p245)
R7F701404EAFB#AA0
U120
DS1302ZN+
JS32
CR2032-3
Q188
MMUN2211LT1G
74HC595D_EN_N
U135
MX25L12833FM2I-10G
VersionControl
P42.12 0 0 0 0
P42.11 1 1 0 0
P42.10 1 0 1 0
D C B A
Shanghai Fengyan
Title
28299
Size
Document Number
CustomDoc+
Rev
2.0
Date: Friday, November 29, 2019
Sheet 3 of 19

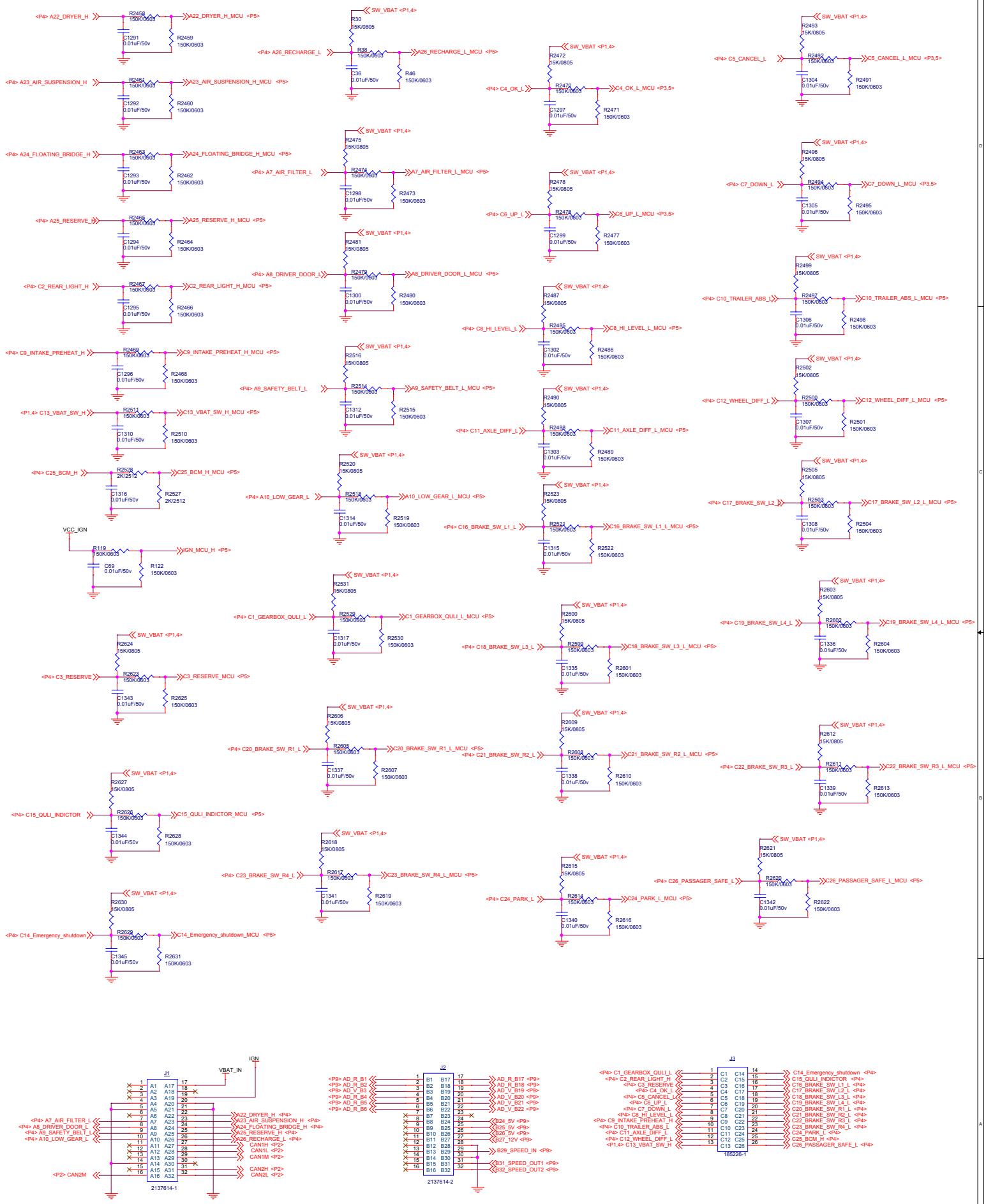

Shanghai Fangyan	
Title	ZB299
Size: Custom	Document Number: <Doc>	Rev: 2.0
Date: Wednesday, October 23, 2019	Sheet 4 of 10

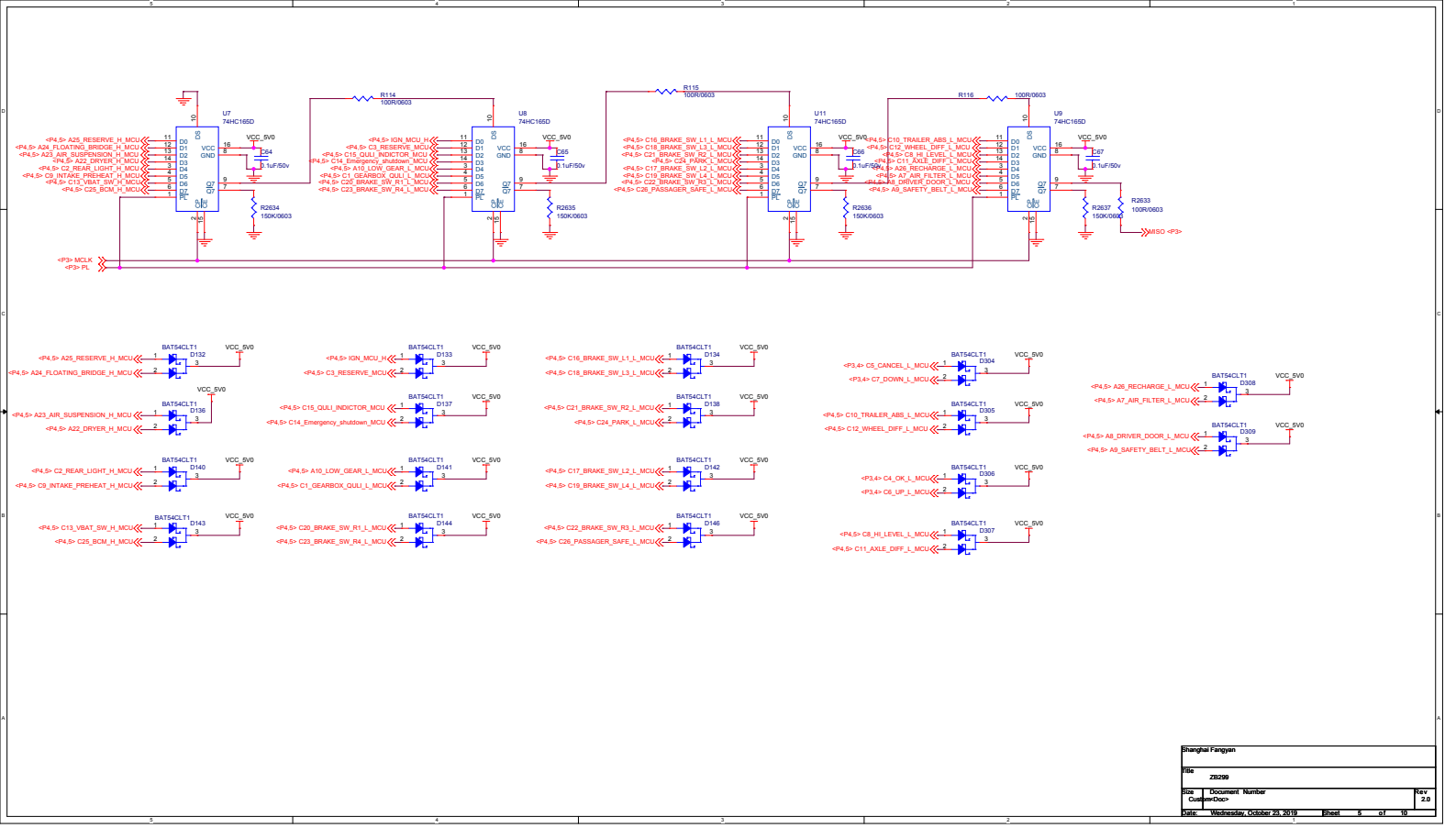

Shanghai Fangyan			
Title: ZB290			
Size: Custom	Document Number: <Doc>		Rev: 2.0
Date: Wednesday, October 23, 2019	Sheet 5 of 10		

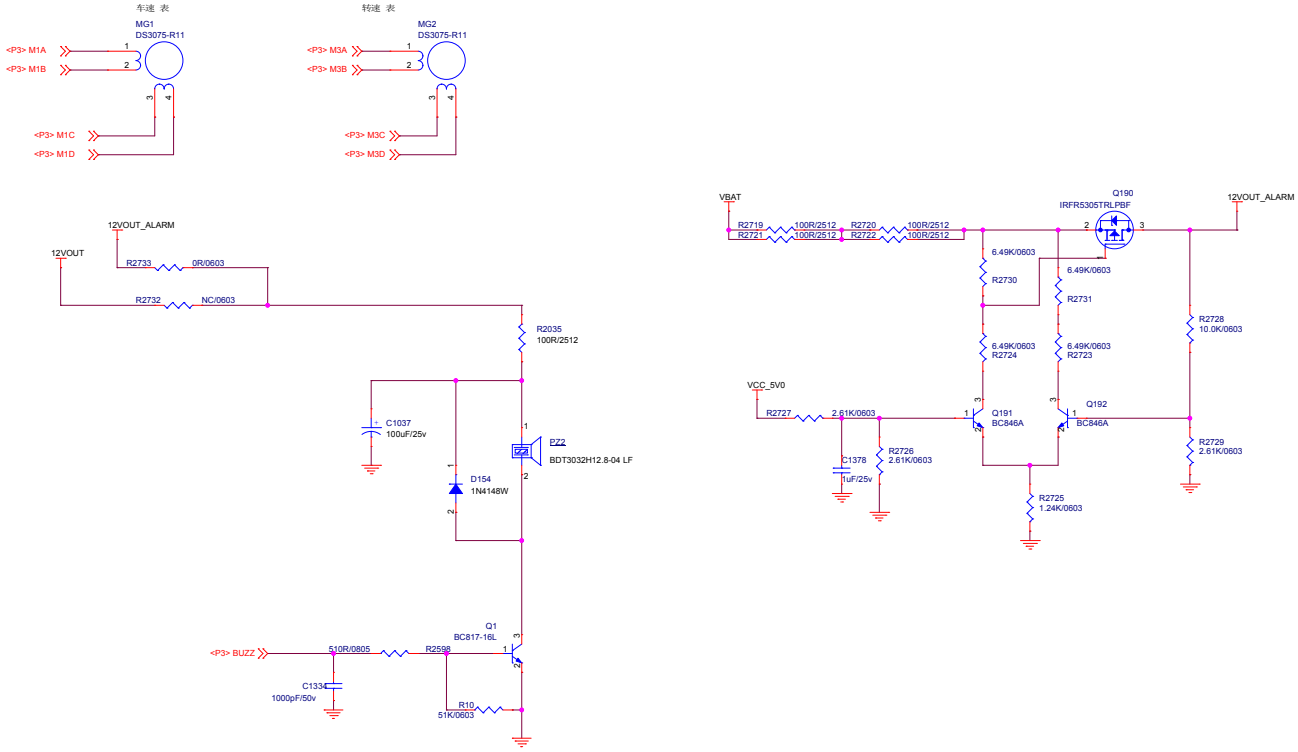

Shanghai Fangyan		
Title: ZB299		
Size: A3	Document Number: <Doc>	Rev: 2.0
Date: Friday, November 15, 2019	Sheet 6 of 10	

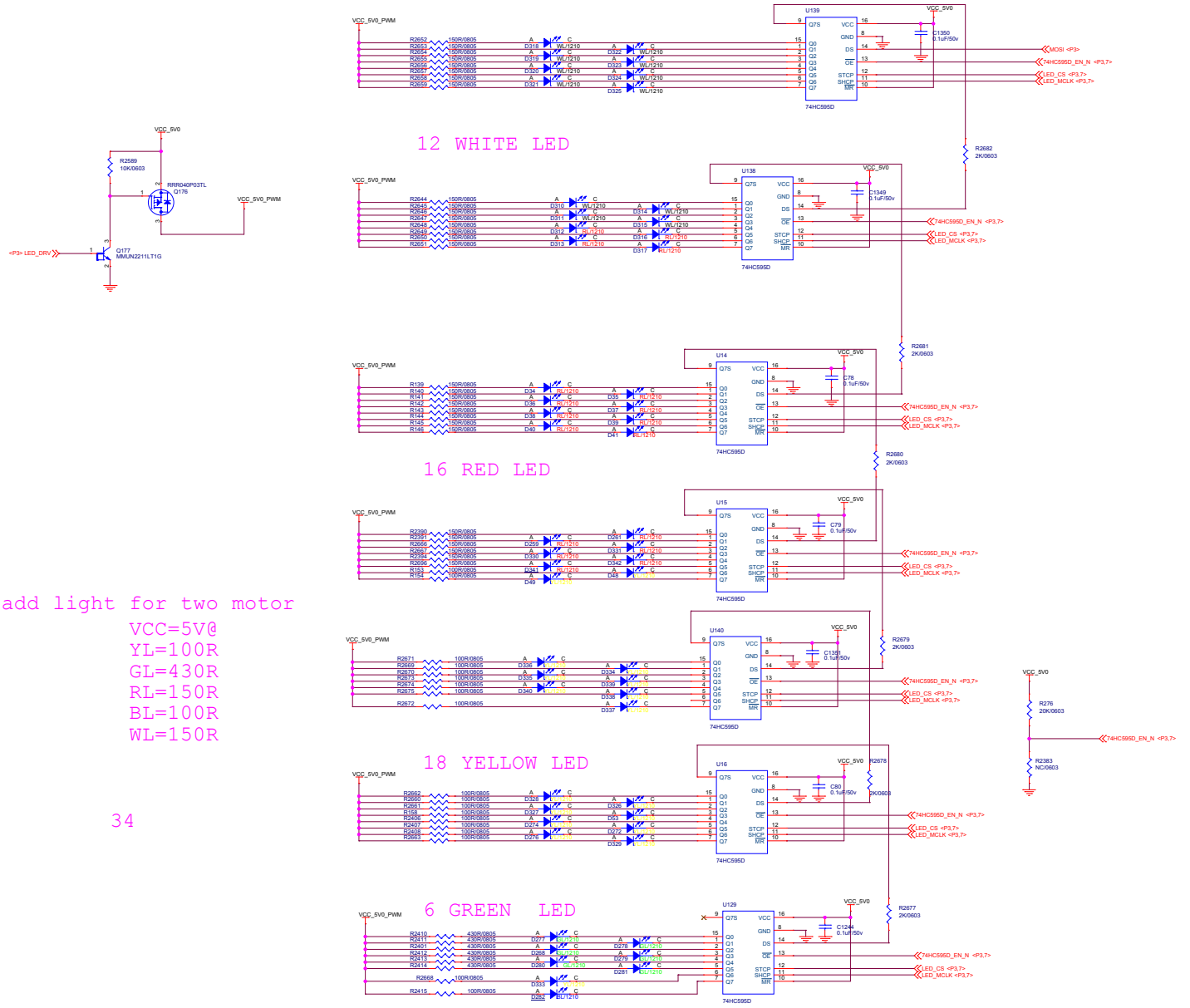

add light for two motor

VCC=5V@

YL=100R

GL=430R

RL=150R

BL=100R

WL=150R

34

Shanghai Fangyan			
Title	ZB299		
Size	Document Number		Rev
Custom	<Doc>		2.0
Date: Friday, November 15, 2019	Sheet 7 of 10		

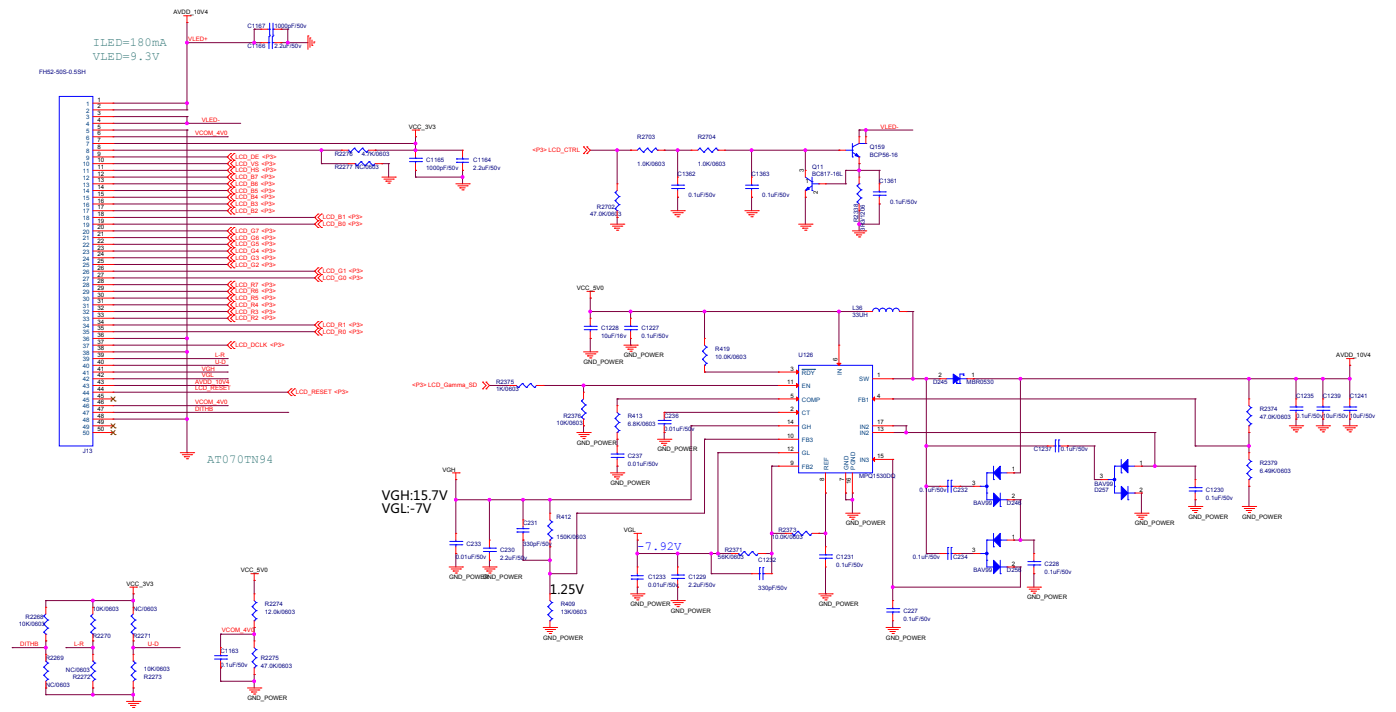
ILED=180mA
VLED=9.3V
FH52-50S-0.5SH
J13
AT070TN94
AVDD_10V4
VLED+
VLED-
VCOM_4V0
VCC_3V3
VCC_5V0
LCD_DE <P3>
LCD_VS <P3>
LCD_HS <P3>
LCD_B7 <P3>
LCD_B6 <P3>
LCD_B5 <P3>
LCD_B4 <P3>
LCD_B3 <P3>
LCD_B2 <P3>
LCD_B1 <P3>
LCD_B0 <P3>
LCD_G7 <P3>
LCD_G6 <P3>
LCD_G5 <P3>
LCD_G4 <P3>
LCD_G3 <P3>
LCD_G2 <P3>
LCD_G1 <P3>
LCD_G0 <P3>
LCD_R7 <P3>
LCD_R6 <P3>
LCD_R5 <P3>
LCD_R4 <P3>
LCD_R3 <P3>
LCD_R2 <P3>
LCD_R1 <P3>
LCD_R0 <P3>
LCD_DCLK <P3>
L-R
U-D
VGH
VGL
AVDD_10V4
LCD_RESET
VCOM_4V0
DITHB
LCD_RESET <P3>
<P3> LCD_CTRL
<P3> LCD_Gamma_SD
Q159
BCP56-16
Q11
BC817-16L
U126
L36
33UH
D245
MBR0530
VGH:15.7V
VGL:-7V
-7.92V
1.25V
BAV99
D247
D256
D257
MPC1530DD
DITHB
L-R
U-D
Shanghai Fangyan
Title
ZB299
Size
A2
Document Number
<Doc>
Rev
2.0
Date: Monday, October 28, 2019
Sheet 8 of 10

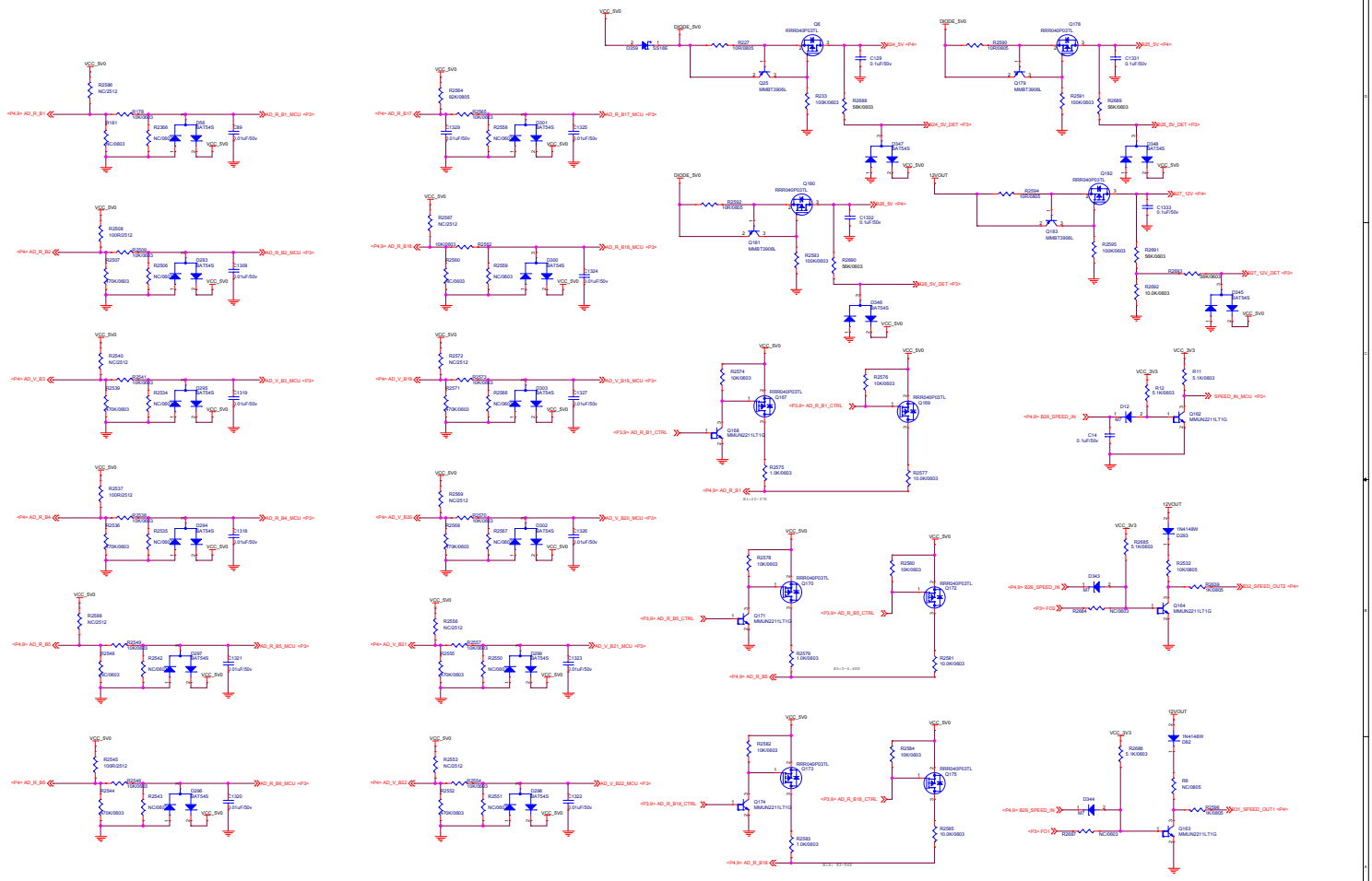
VCC_5V0
DIODE_5V0
Q6
RRR040P03TL
Q178
Q25
MMBT3906L
Q179
Q180
Q181
Q182
Q183
12VOUT
VCC_3V3
D12
Q162
MMUN2211LT1G
D343
Q164
D344
Q163
Q168
Q169
Q170
Q171
Q172
Q173
Q174
Q175
D347
D346
D345
D294
D297
D296
D295
D298
D299
D300
D301
D302
D303
D304
D305
D306
D307
D308
D309
D310
D311
D312
D313
D314
D315
D316
D317
D318
D319
D320
D321
D322
D323
D324
D325
D326
D327
D328
D329
D330
D331
D332
D333
D334
D335
D336
D337
D338
D339
D340
D341
D342
D343
D344
D345
D346
D347
C129
C1331
C1332
C1333
C14
R11
R12
R6
R2532
R2533
R2534
R2535
R2536
R2537
R2538
R2539
R2540
R2541
R2542
R2543
R2544
R2545
R2546
R2547
R2548
R2549
R2550
R2551
R2552
R2553
R2554
R2555
R2556
R2557
R2558
R2559
R2560
R2561
R2562
R2563
R2564
R2565
R2566
R2567
R2568
R2569
R2570
R2571

Draco_KT1A DIAGRAM

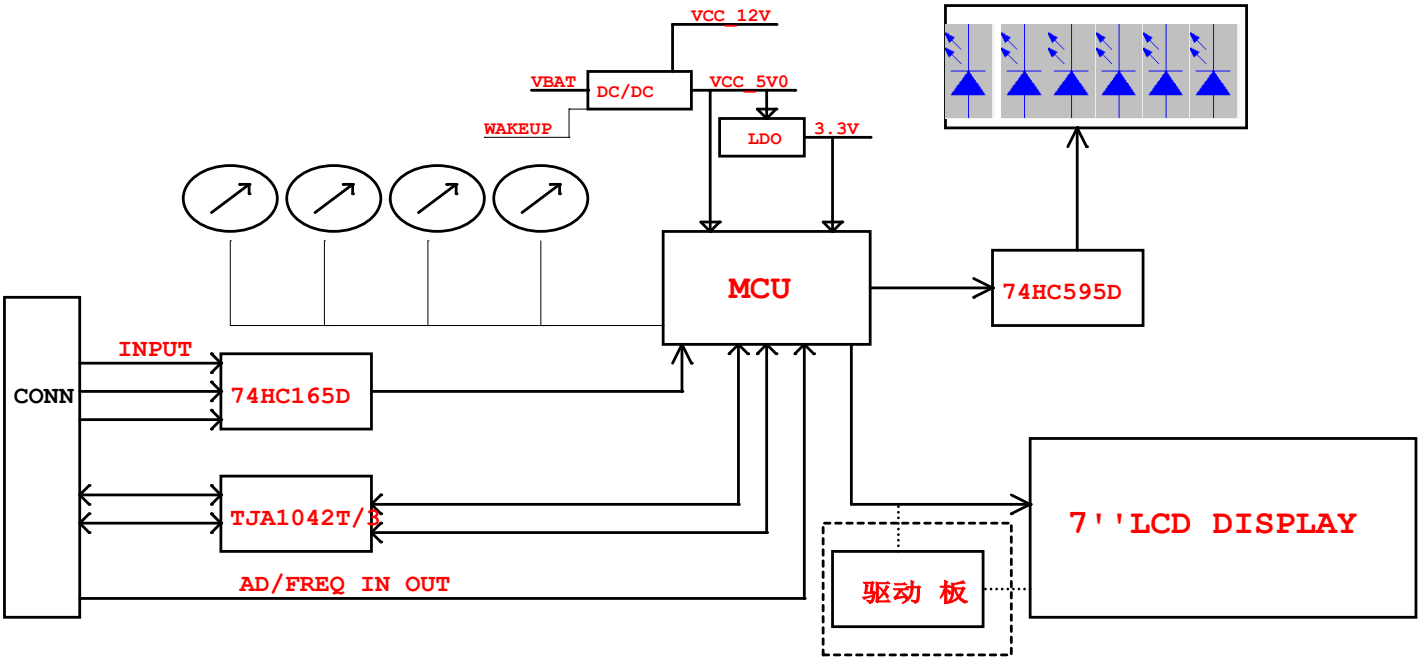

Shanghai Fangyan			
Title	ZB299		
Size A3	Document Number <Doc>		Rev 2.0
Date: Wednesday, October 23, 2019	Sheet 10 of 10		