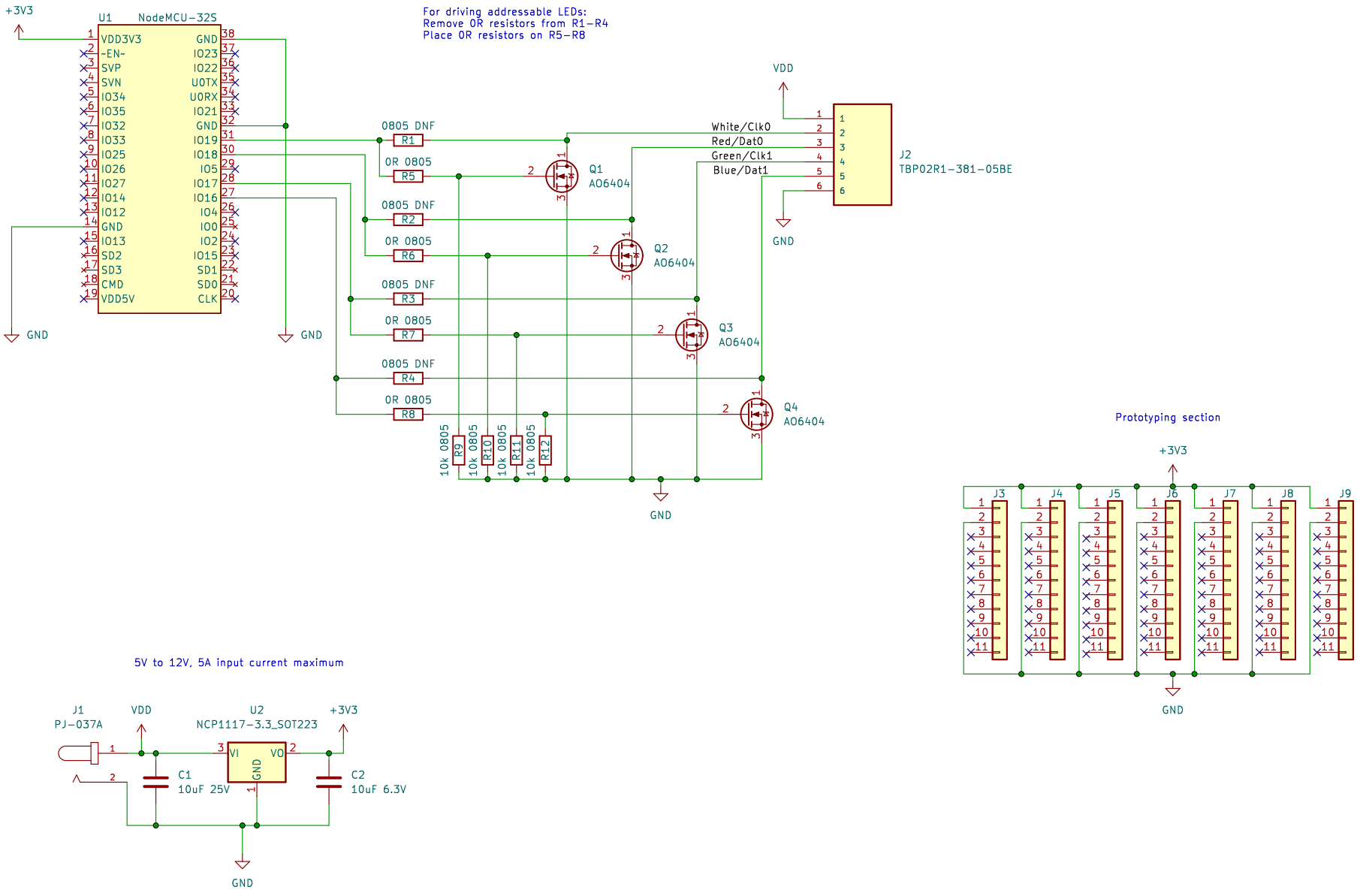
For driving addressable LEDs:
Remove 0R resistors from R1–R4
Place 0R resistors on R5–R8
U1 NodeMCU-32S
+3V3
VDD3V3
~EN~
SVP
SVN
IO34
IO35
IO32
IO33
IO25
IO26
IO27
IO14
IO12
GND
IO13
SD2
SD3
CMD
VDD5V
GND
IO23
IO22
U0TX
U0RX
IO21
GND
IO19
IO18
IO5
IO17
IO16
IO4
IO0
IO2
IO15
SD1
SD0
CLK
GND
0805 DNF R1
0R 0805 R5
0805 DNF R2
0R 0805 R6
0805 DNF R3
0R 0805 R7
0805 DNF R4
0R 0805 R8
Q1 AO6404
Q2 AO6404
Q3 AO6404
Q4 AO6404
10k 0805 R9
10k 0805 R10
10k 0805 R11
10k 0805 R12
GND
VDD
White/Clk0
Red/Dat0
Green/Clk1
Blue/Dat1
J2 TBP02R1-381-05BE
GND
Prototyping section
+3V3
J3
J4
J5
J6
J7
J8
J9
GND
5V to 12V, 5A input current maximum
J1 PJ-037A
VDD
U2 NCP1117-3.3_SOT223
+3V3
VI
VO
GND
C1 10uF 25V
C2 10uF 6.3V
GND