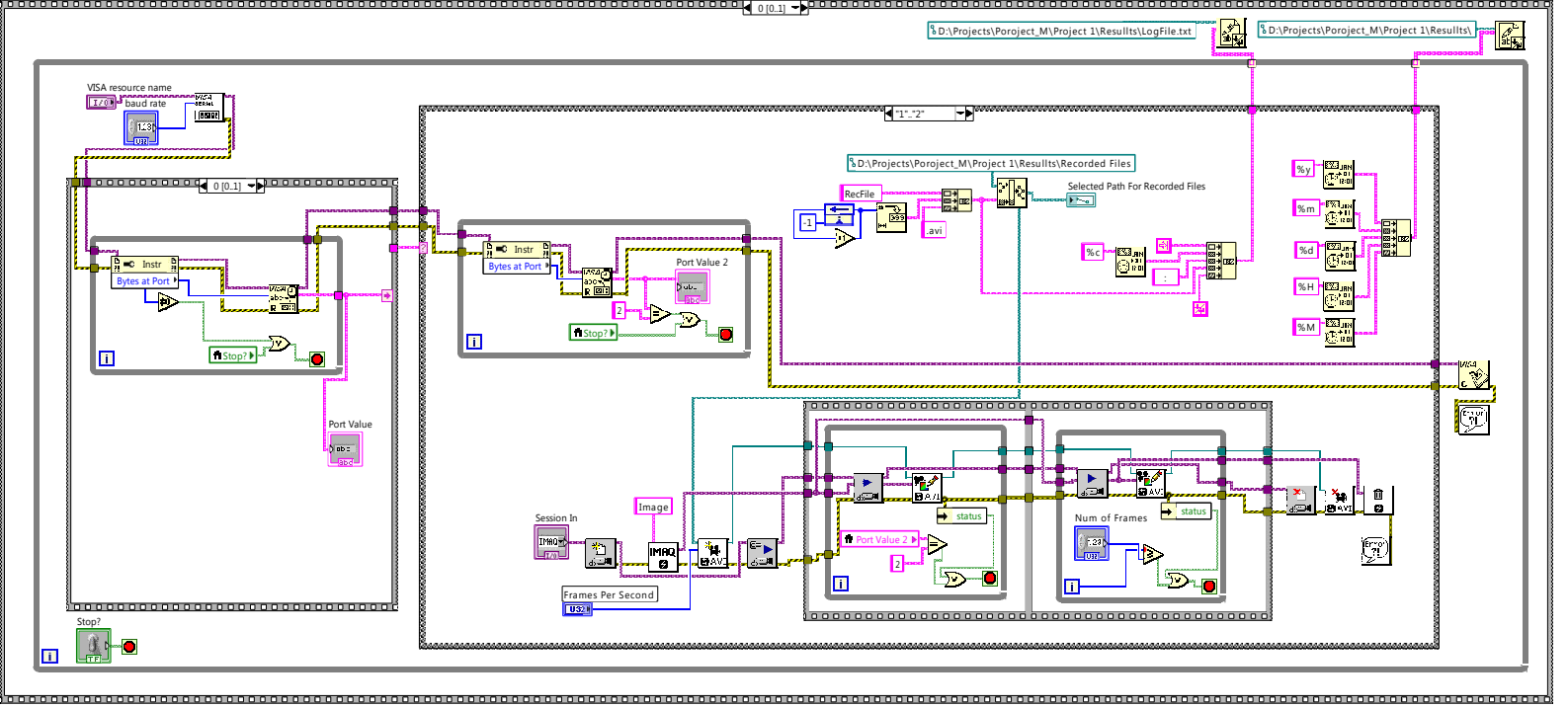
0 [0..1]
D:\Projects\Poroject_M\Project 1\Resullts\LogFile.txt
D:\Projects\Poroject_M\Project 1\Resullts\
VISA resource name
baud rate
Instr
Bytes at Port
Stop?
Port Value
"1"..."2"
D:\Projects\Poroject_M\Project 1\Resullts\Recorded Files
RecFile
.avi
Selected Path For Recorded Files
%y
%m
%d
%H
%M
%c
Port Value 2
Session In
Image
Frames Per Second
status
Num of Frames

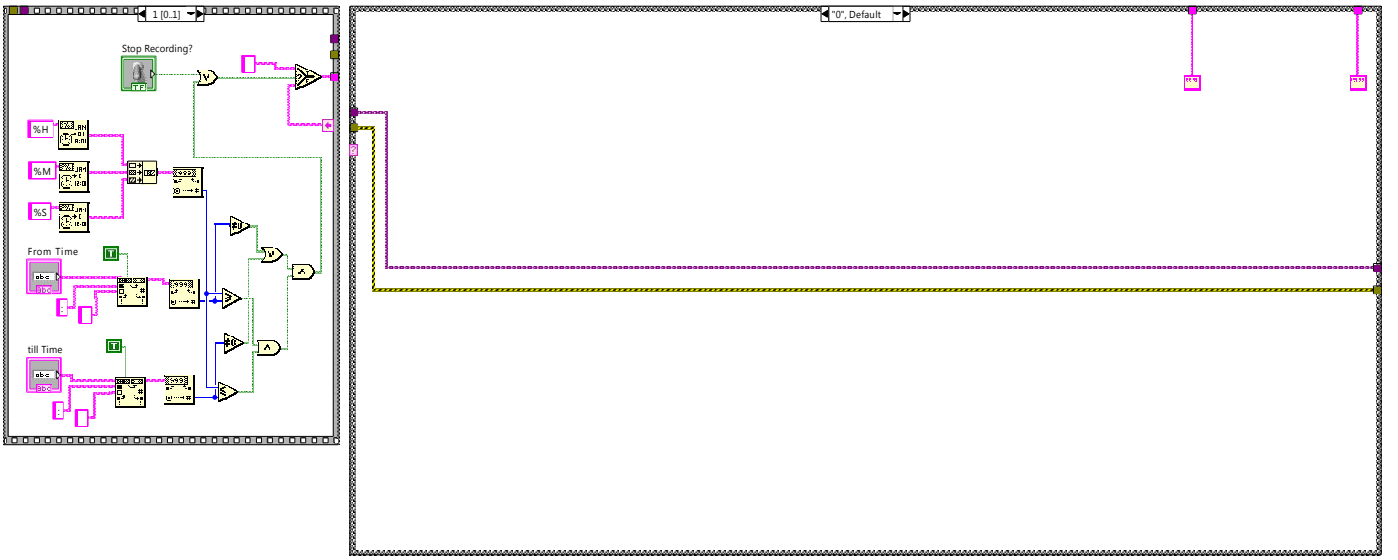
1 [0..1]
Stop Recording?
%H
%M
%S
From Time
till Time
"0", Default

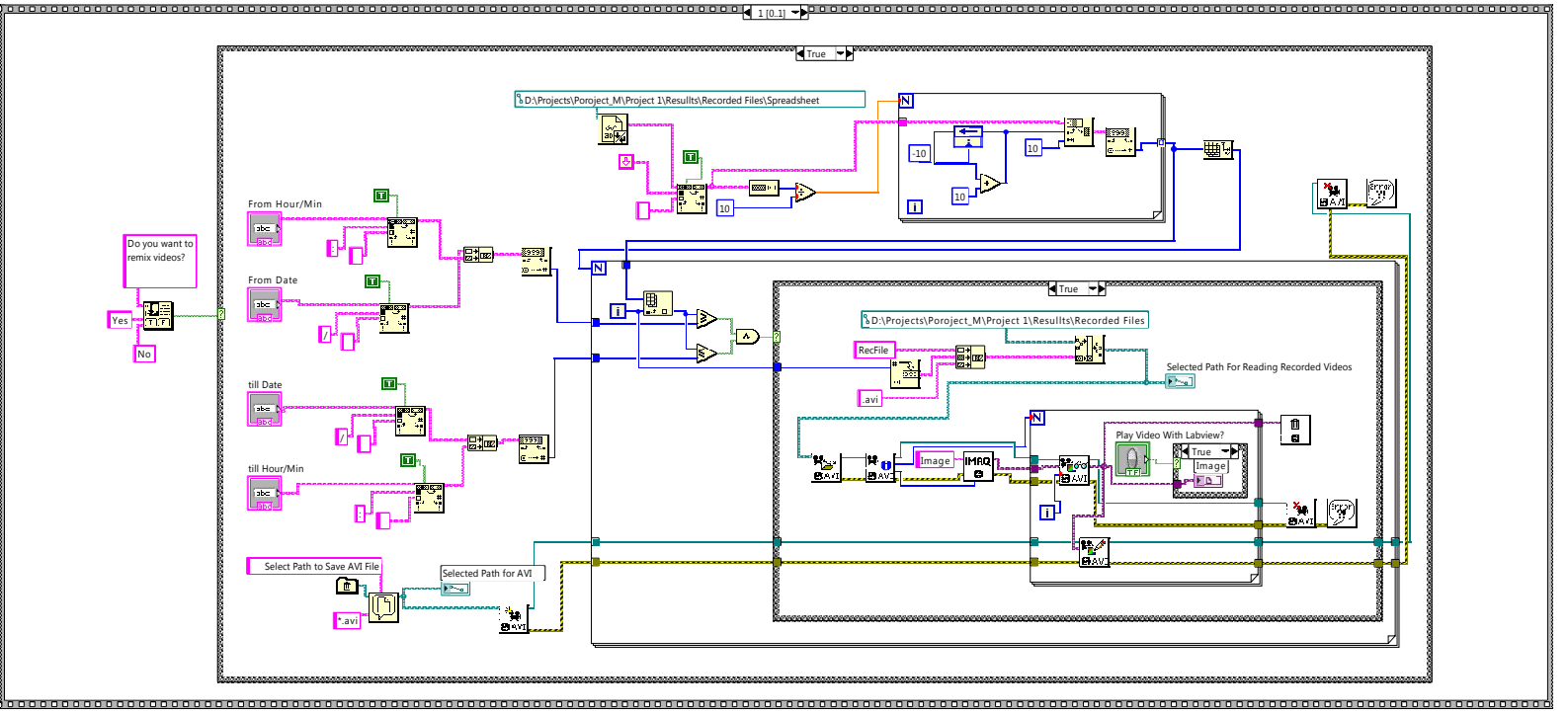
1 [0..1]
True
D:\Projects\Poroject_M\Project 1\Resullts\Recorded Files\Spreadsheet
From Hour/Min
From Date
till Date
till Hour/Min
Do you want to remix videos?
Yes
No
D:\Projects\Poroject_M\Project 1\Resullts\Recorded Files
RecFile
.avi
Selected Path For Reading Recorded Videos
Play Video With Labview?
Image
Select Path to Save AVI File
*.avi
Selected Path for AVI

False

False
False