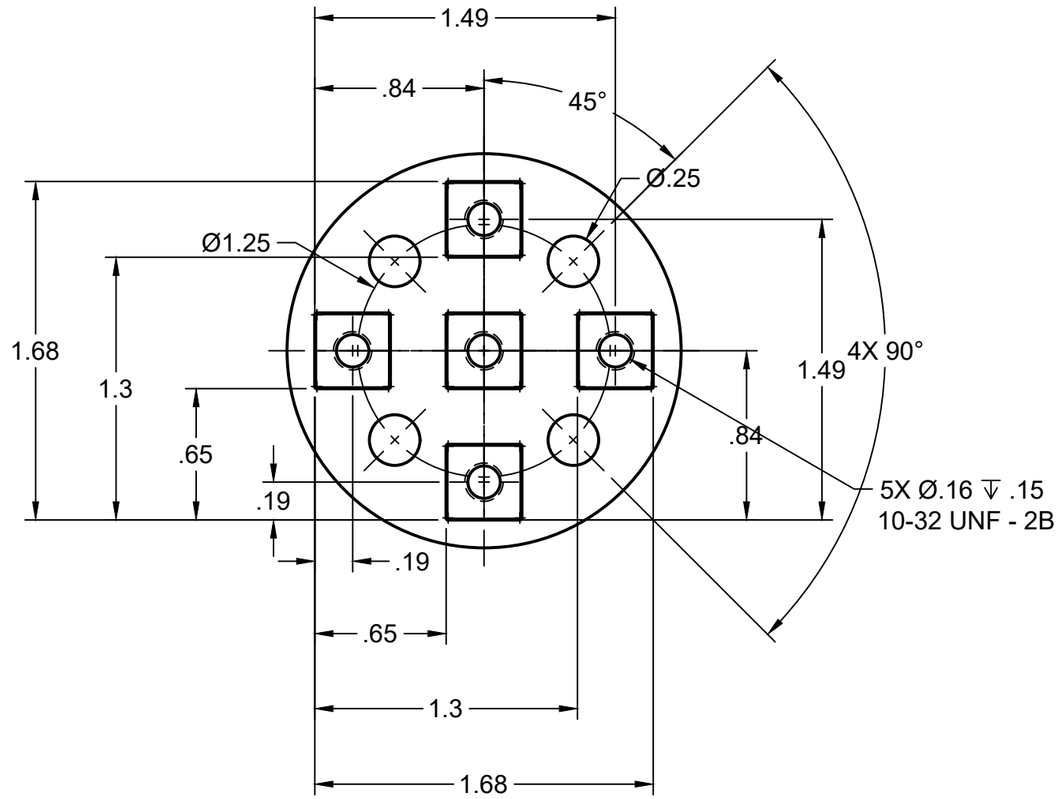

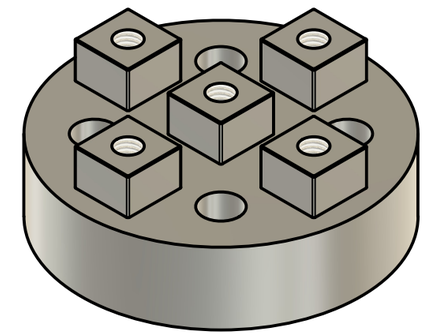

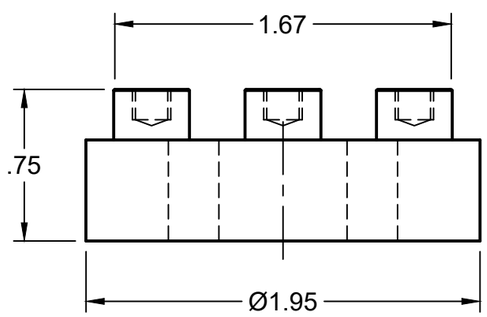

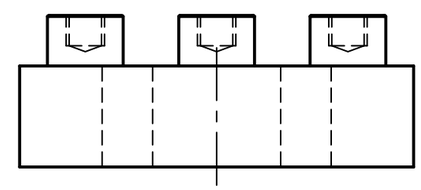

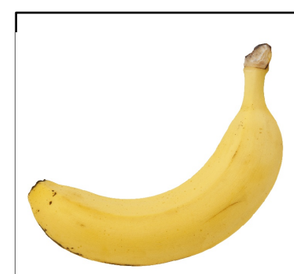

PROJECT Titan Academy				
TITLE 6M				
APPROVED	SIZE B	CODE	DWG NO	REV
CHECKED				
DRAWN Matthew Jeide 9/30/2025	SCALE 1:.75 (From parent)	WEIGHT		SHEET 1/1