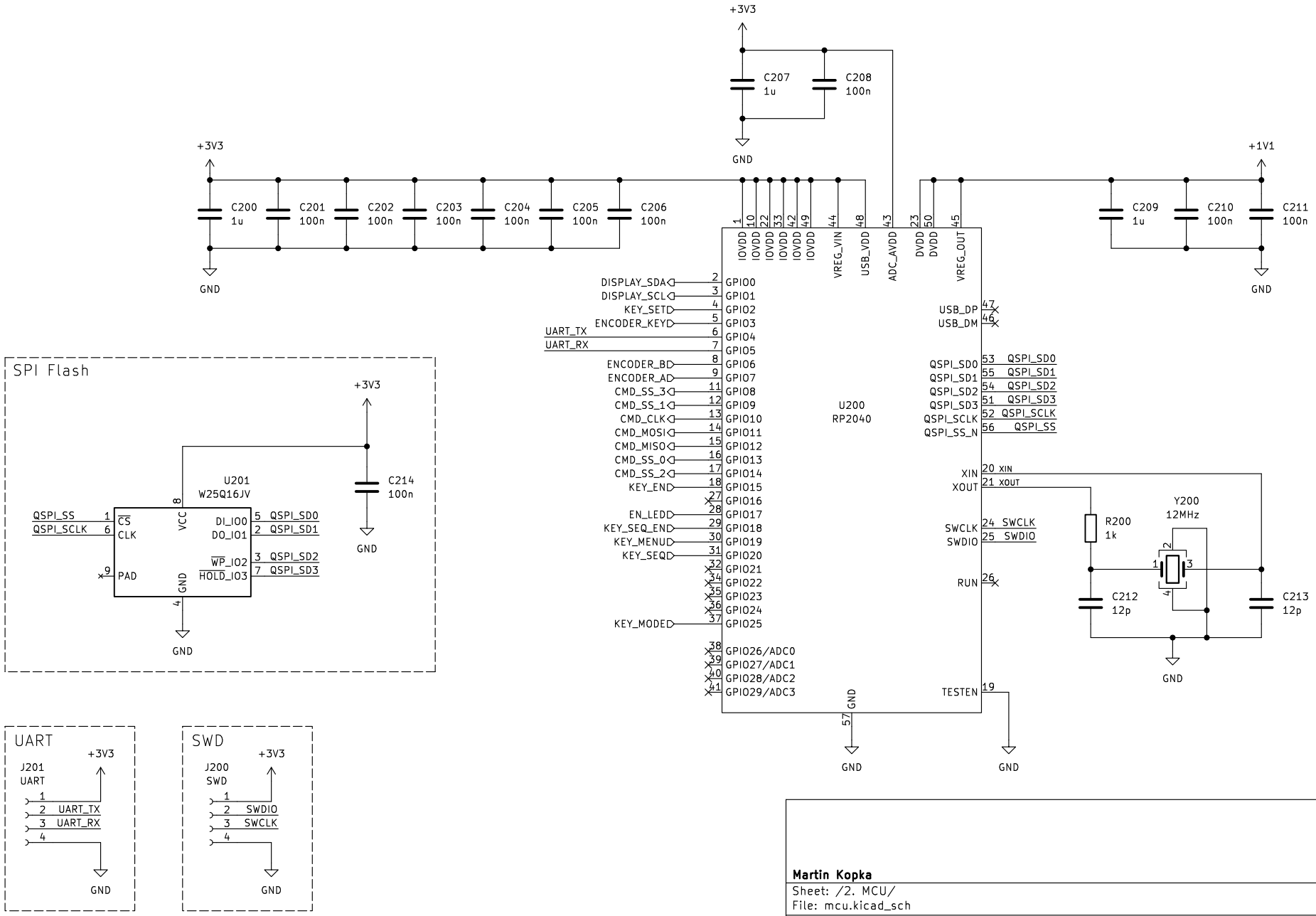

Martin Kopka

Sheet: /2. MCU/

File: mcu.kicad_sch

Title: MCU

Size: A4	Date: 03/2024	**Rev: 1**
KiCad E.D.A. 8.0.1		Id: 3/4