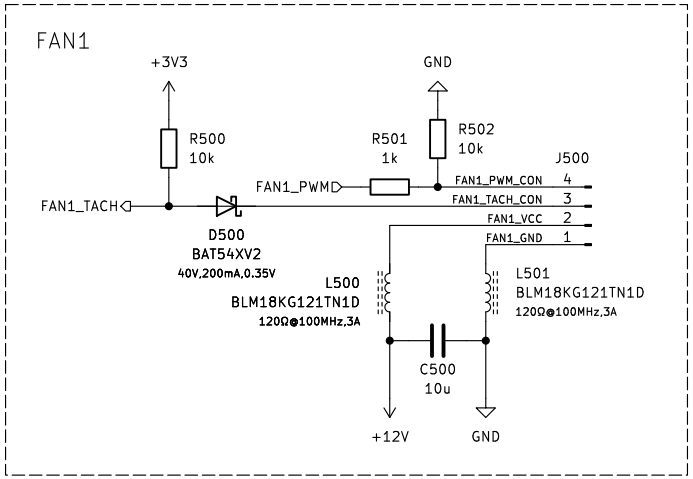

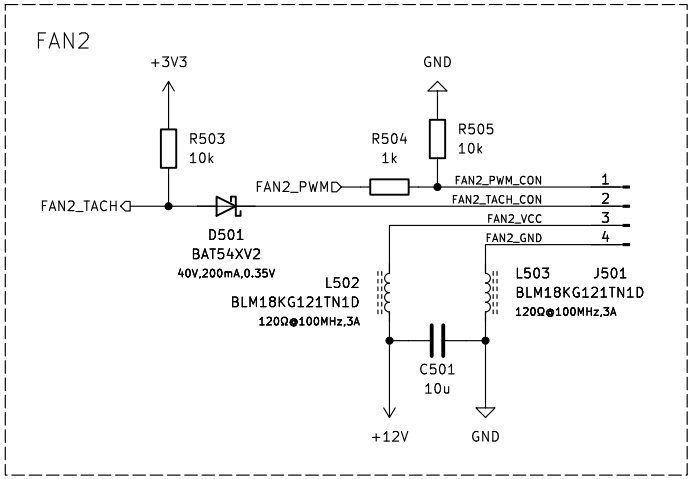

Martin Kopka

Sheet: /5. Fan Control/
File: fan-control.kicad_sch

Title: Fan Control

Size: A4	Date: 02/2024	**Rev:**
KiCad E.D.A. 8.0.1		Id: 5/6