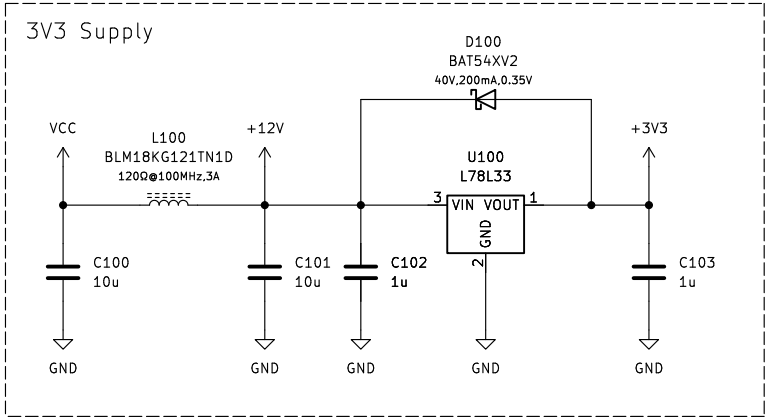

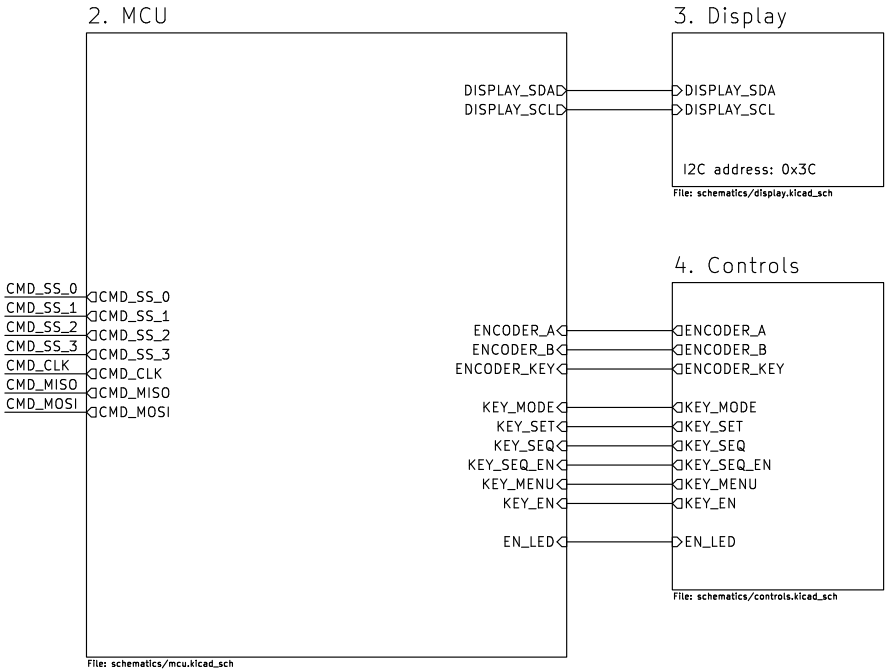

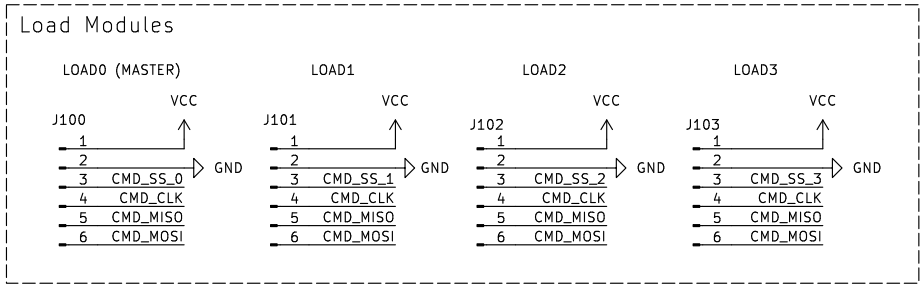

H1 MountingHole
H2 MountingHole
H3 MountingHole
H4 MountingHole
H5 MountingHole
H6 MountingHole

Martin Kopka

Sheet: /
File: dcload-interface-board.kicad_sch

Title: DC Load User Intefrace Board

Size: A4	Date: 03/2024	**Rev: 1**
KiCad E.D.A. 8.0.1		Id: 1/4