# Spatio-Temporal Heterogeneous Graph-Based Modeling and Temperature Prediction for Data Center Indoor System

Haobo Guo, Mengwei Dai, Na Sun, Siyuan Yang, Jie Wu, Junyu Chen, Mingyang Wang, Xianhao Liu, Wenquan Tao*

Xi'an Key Laboratory of Data Center Energy Saving and Low Carbon Technology

Key Laboratory of Thermo-Fluid Science and Engineering of MOE

Xi'an Jiaotong University, Shaanxi 710049, China

Xi'an ShuFeng Technological Information, Ltd., Xi'an 710000, China

Alibaba Cloud Computing, Alibaba Group, Hangzhou 311121, China

**Abstract:**

The rapid growth of data centers driven by digital transformation and artificial intelligence has brought increasing attention to their high energy consumption, particularly from cooling systems. Accurate and efficient prediction of indoor temperature distributions is critical for enabling real-time control and energy optimization of cooling strategies. However, existing modeling approaches—ranging from simplified zero-dimensional models to computationally intensive CFD simulations—either lack spatial resolution or are unsuitable for real-time applications due to their high computational costs. To address these challenges, this study proposes a novel spatio-temporal heterogeneous graph-based modeling approach that captures the complex interactions between equipment operational conditions and thermal dynamics within data center environments. Temperatures measured by distributed sensors are encoded as node features, while equipment states such as CRAH fan speed rates and rack power consumption are integrated as edge features with heterogeneous types. A specialized graph neural network, ST-HEGAT, is developed within this framework to achieve rapid and accurate prediction of the indoor temperature field. The model was trained using real-world operational data collected from a large-scale data center in

Preprint not peer reviewed

This preprint research paper has not been peer reviewed. Electronic copy available at: https://ssrn.com/abstract=5292473

Shanghai, China. To identify the optimal graph structure and hyperparameter settings, Bayesian optimization was employed across four graph structures. The best-performing structure achieved a RMSE of 0.187 ± 0.098 °C. The model demonstrates high prediction accuracy, robust long-horizon stability, and four orders of magnitude faster inference compared to traditional CFD methods. Owing to its structural generalizability and computational efficiency, the proposed approach provides a practical foundation for intelligent thermal management and energy-efficient control in modern data centers.

**Key words:** real-time temperature prediction, spatio-temporal modeling, heterogeneous graph, graph neural network, data center

## 1 Introduction

With the rapid advancement of the digital economy and artificial intelligence (AI), data centers have become the backbone of modern computing infrastructure, supporting large-scale data storage, processing, and cloud services [1]. However, the high energy consumption of cooling systems in data centers presents a significant challenge, as air conditioning units and mechanical refrigeration systems can account for up to 38% of the total power usage [2]. Ensuring efficient thermal management to maintain a stable operation of electronic equipment while minimize energy consumption is therefore a critical issue for the data center design and operation[3] .

To achieve an effective thermal management, an optimized cooling strategy is needed which relies on the accurate and efficient prediction of indoor temperature distribution [4]. In cooling system modeling for control purpose, indoor environmental temperature is either abstracted as a zero-dimensional value [5-8], determined by averaging multiple measurement points by using a single-point measurement, or establishing a fitted relationship of temperature

Preprint not peer reviewed

This preprint research paper has not been peer reviewed. Electronic copy available at: https://ssrn.com/abstract=5292473

with the heat load and supply air conditions. While this assumption may be reasonable for small-scale data centers, modern data center typically exceed 1000 m² in indoor area [9], making such simplifications inadequate and potentially containing factors that affect reliability.

Computational Fluid Dynamics (CFD) is a widely adopted technique in the design and operation of data centers [10-13], offering detailed insights into airflow and temperature distribution by solving flow and heat transfer governing equations. Although CFD provides high-resolution of spatial temperature data, its computational cost and time-intensive nature significantly limit its applicability in real-time cooling system control and optimization. Given the increasing demands for efficient and rapid-responsive thermal management, developing a fast and accurate transient temperature prediction model remains a critical challenge for next-generation data center operations.

Data-driven methods have gained increasing attention in indoor environment temperature prediction due to their advantages over CFD techniques, particularly in terms of lower computational cost and reduced inference time while maintaining high predictive accuracy. These characteristics make data-driven approaches being better suited for real-time control and optimization applications. Followings is a brief review on the recent studies in this regard.

Fang et al. [14] proposed a multi-step ahead indoor temperature prediction model based on a sequence-to-sequence (seq2seq) architecture with Long Short-Term Memory (LSTM) networks. The model utilizes historical indoor temperature data from multiple rooms, along with outdoor environmental variables (e.g., outdoor temperature and solar radiation), to predict future indoor temperature variations. Although predictive accuracy declines as the forecasting horizon extends—ranging from an Root Mean Square Error (RMSE) of 0.267 at a 1-hour horizon to

Preprint not peer reviewed

This preprint research paper has not been peer reviewed. Electronic copy available at: https://ssrn.com/abstract=5292473

0.663 at a 168-hour horizon—the model still demonstrates robust predictive performance. Wang et al. [15] developed a Transient Thermal System Model (TTSM) specifically designed for data centers utilizing row-based or rack-based cooling systems. This framework extends the LSTM approach to support multi-input, multi-output (MIMO) predictions, which are widely required in Industrial Internet of Things (IIoT) applications. By leveraging historical data on server loads, cooling power consumption and room temperature, the model predicts key temperature-related variables, including inlet and outlet temperatures of server rooms as well as server temperatures. On the test dataset, the model achieved high predictive accuracy, with Mean Absolute Percentage Errors (MAPE) of 2.43% and 1.66% for inlet and outlet temperatures, respectively. Tabrizchi et al. [16] introduced a temperature prediction model, which integrates Convolutional Neural Networks (CNNs) with multi-layer Bi-directional Long Short-Term Memory (BiLSTM) networks for temperature forecasting. The model incorporates a time-series representation of server states—including power consumption, CPU temperature, CPU utilization degree, memory usage, fan speed, and the number of running virtual machines—along with cooling system energy consumption and indoor environmental parameters (e.g., temperature, humidity, and airflow). The model demonstrated strong predictive performance, achieving an RMSE of 0.2892 and a Relative Mean Absolute Error (RMAE) of 0.5003. Fang et al.[17] combined numerical modeling with deep learning algorithms to develop a data-driven server temperature prediction model. The proposed Attention-DNN-Bayesian model predicts the steady-state server temperature based on server power, supply air temperature, and airflow velocity. The model achieved an average absolute error of 0.65°C, with an inference time of 97 ms—significantly outperforming CFD-based methods, which require approximately 5 minutes for computation.

Preprint not peer reviewed

This preprint research paper has not been peer reviewed. Electronic copy available at: https://ssrn.com/abstract=5292473

In the above-mentioned studies, the prediction models primarily rely on vector-based or tabular data structures, which fail to capture spatial correlations inherent in the data, such as the effects of airflow distribution and the relative distances between different locations. This limitation necessitates the use of more complex neural network architectures to model spatial dependencies within the system. Moreover, as the scale of the building increases, the number of model parameters grows exponentially, leading to significantly higher computational costs and greater data requirements for training. These challenges ultimately hinder the scalability of such models and limit their practical applicability in real-world engineering scenarios. Very recently many scholars have conducted research on spatio-temporal data modeling and prediction models, where the modeling process explicitly considers the temporal and spatial correlations between the data. Among them, graph structures, as a data structure that describes spatial correlations, are widely used. Zhang et al.[18] proposed a spatio-temporal data-driven prediction model for central air-conditioning systems, which considers both temporal and spatial correlations between the data through spatio-temporal graph modeling. The proposed graph neural network-recurrent neural network architecture predicts the system temperature based on the temperature data collected by various IoT sensors in the building, achieving higher accuracy than the traditional CNN-RNN architecture, with an RMSE of 0.39°C. Hu et al. [19] proposed a hybrid self-learning dynamic graph neural network with a self-attention mechanism for air conditioning prediction. The model overcomes the limitations of static graph structures by constructing an evolving adjacency matrix integrated with gated recurrent units and self-attention, effectively capturing the dynamic relationships between feature changes and describing dynamic spatial impact patterns. It performs with a Correlation Coefficient ($R^2$) of 0.935 in multi-task prediction (MTP)

Preprint not peer reviewed

This preprint research paper has not been peer reviewed. Electronic copy available at: https://ssrn.com/abstract=5292473

tasks, showing a 20.18% improvement over the traditional LSTM model (which does not consider spatial correlations). Jia et al.[20] proposed a graph-based method that uses a temporal graph attention network (TGAT) model for building thermal load prediction, considering both spatial and temporal dependencies in different thermal zones. Using outdoor environmental information along with historical data on relative humidity and the occupancy status in different areas as inputs, the model predicts the temperature of different regions at the next time step. The model attains a Mean Squared Error (MSE) of 0.02 when utilizing a 6-hour lookback period and 4 attention heads. Li et al.[21] represented the building air conditioning system as a graph for machine learning, where the nodes and edges represent physical entities (e.g., VAV terminals) and their connections (e.g., ductwork), reflecting the spatial relationships between different entities. Using historical temperature and flow data recorded by sensors within the building, the system predicts the future temperature distribution to facilitate energy consumption management in the building. Wang et al.[22] modeled various zones in large and complex buildings as nodes in a graph structure, thus capturing the interactions between different regions. Graph convolutional network (GCN) is used to extract the spatial relationships between the states of different regions, while LSTM extracts temporal features of the states, such as temperature, lighting, and power consumption within each region, to predict the temperature of each region. The model integrates both spatial and temporal features from the data, with a Mean Absolute Error (MAE) of 0.477 on the test set. Yang et al.[23] proposed a graph model embedded with compact physical equations to simulate the thermal dynamics of buildings. To account for the interactions between different zones, the multi-zone building is represented as a graph, where the zones are treated as nodes, and any heat flow across zones is modeled as edges based on prior

Preprint not peer reviewed

This preprint research paper has not been peer reviewed. Electronic copy available at: https://ssrn.com/abstract=5292473

knowledge of the building's structure. The model uses inputs such as supply air volume, supply air temperature, ambient temperature, and indoor temperature to predict future indoor temperatures, achieving a normalized open-loop MSE of 0.0012 over 288 time steps. Zou et al.[24] proposed a deep learning method, control relationship graph Informer (CRG-Informer), which integrates spatio-temporal features to improve multi-step forecasting performance. The spatial relationships are established based on the physical structure and control characteristics of the cooling system, reflecting the actual physical processes. The model uses an informer model with a self-attention mechanism to capture long-term dependencies in the time-series data. The input consists of historical data corresponding to each node, while the output is the cooling load sequence for the building over a future period. The model outperforms existing prediction models in tasks with 5-30 minute intervals, with an MSE of 0.063 for 6-step cooling load forecasting when the data interval is 5 minutes. Liu et al.[25] developed a hybrid indoor temperature distribution prediction model that combines mechanism-based and data-driven approaches. By utilizing the building's structural features, they constructed a spatio-temporal tensor and developed a deep spatio-temporal convolutional network to capture spatial and temporal correlations, effectively describing the dynamic relationship between input features and the resulting temperature distribution. The input and output are based on a globally structured indoor grid system, where historical data for each grid, including temperature, thermal power, and operational conditions of various devices, are used to predict temperature distribution. The model achieves an average RMSE of 0.794 across three target scenarios, with a computation time of 0.289s, which is three orders of magnitude faster compared to CFD methods.

However, there are some issues in the above-mentioned modeling approaches. First, the

Preprint not peer reviewed

This preprint research paper has not been peer reviewed. Electronic copy available at: https://ssrn.com/abstract=5292473

models usually treat the influence between all nodes as equal, without considering the dominant relationships between different physical processes and the states of the nodes. This assumption is not suitable for the complex flows within data centers. Second, when constructing the data structure, all variables are treated as nodes, ignoring the physical significance of differences between different types of input variables. These modeling approaches limit the models' expressiveness when there are many input types (e.g., sensor temperatures and various device operating conditions in data centers), resulting in increased training and inference costs and a decline in model performance.

To address the limitations of the existing prediction methods in modeling indoor temperature distribution within data centers, this study proposes a novel approach for temperature field modeling and forecasting. The primary contributions of this work are twofold: (1) a modeling approach based on a spatio-temporal heterogeneous graph is proposed and (2) a temperature prediction model is established leveraging the spatio-temporal heterogeneous edge-enhanced graph attention network (ST-HEGAT).

The remainder of this paper is organized as follows. Section 2 introduces the proposed spatio-temporal heterogeneous graph-based modeling approach and the development of the predictive network. This spatio-temporal heterogeneous graph is employed to capture both the temporal and spatial correlations between equipment operating conditions and system temperature. In this framework, temperatures at different locations are represented as node features, while equipment operating conditions are encoded as edge features. The heterogeneous graph structure allows edges to have different types, enabling a more precise representation of heat transfer characteristics across different regions within the data center. In this section the ST-

Preprint not peer reviewed

This preprint research paper has not been peer reviewed. Electronic copy available at: https://ssrn.com/abstract=5292473

HEGAT network model is designed specifically for temperature field prediction in data center server rooms by using the proposed heterogeneous-graph-based framework. This model leverages spatio-temporal heterogeneous graphs with multiple edge types to enable fast and accurate temperature forecasting. Section 3 presents the case study on an operating data center located in Shanghai, China, including the modeling of a real-world data center and the data collection, model training and evaluation process. The prediction model was trained and tested using operational data collected from the facility. Section 4 discusses the performance and limitations of the model in terms of data acquisition, training, and generalization. Finally, Section 5 presents the conclusions of this study.

## 2 Methodology

The proposed methodology consists of two key components. The first part is the graph-based spatio-temporal data integration, which aims to integrate spatio-temporal data of the data center's indoor thermal system using graph-based representations. This includes system temperatures at various locations and the operational states of equipment within the data center. The system temperatures and equipment states are represented as nodes and edges in the graph, respectively, ensuring that all nodes and edges share consistent physical significance. The second part is the spatio-temporal neural network, which is designed to predict transient changes in the indoor thermal system of the data center. The graph structure derived from the first part will be used as input to the neural network to capture the spatio-temporal relationships between the indoor environment and the equipment within the server room. The two parts are described in detail in the following presentation.

Preprint not peer reviewed

This preprint research paper has not been peer reviewed. Electronic copy available at: https://ssrn.com/abstract=5292473

## 2.1 Graph-based spatio-temporal data integration

Currently, data centers generate vast amounts of data during operation, such as power usage, heat dissipation, and cooling demands. Due to the continuous operation and the large variety and quantity of devices, data centers produce an extensive and diverse dataset. To effectively build a model, it is necessary to clearly define the relationships between the variables involved. Taking the indoor temperature field of a data center as an example, it is influenced not only by the historical temperature distribution but also by the operational history of the equipment. This influence can be understood in two dimensions: spatial and temporal. To describe the various data within the data center using a spatio-temporal graph-based structure, the spatial and temporal relationships in the data are introduced in order as follows.

### 2.1.1 Spatial relationships of data in data center indoor system

The indoor thermal environment of a data center is a complex system where the temperatures at different locations influence one another. This environment consists of interconnected spaces, and the temperature at one location affects surrounding and downstream areas through diffusion and convection. In air-cooled data centers, these thermal interactions are largely governed by airflow distribution patterns. For instance, in a data center with a cold aisle containment layout, locations on either side of the cold aisle partition are physically close but exhibit no direct thermal interactions. The airflow distribution in a normally operating data center typically follows a stable pattern, enabling the determination of temperature interactions based on the airflow distribution. The reachability of these interactions depends on the airflow organization, only locations with upstream-downstream relationships exhibit thermal influence. And the extent of

Preprint not peer reviewed

This preprint research paper has not been peer reviewed. Electronic copy available at: https://ssrn.com/abstract=5292473

this influence is determined by the operating conditions of nearby equipment. For example, the impact of supply air temperature from air conditioning units on the cold aisle temperature depends on the fan speeds of adjacent air conditioning units. Similarly, the effect of the cold aisle temperature on the hot aisle temperature is influenced by the load of the traversing racks.

Graph structures are inherently well-suited for modeling the discrete temperature field within a data center, as they can effectively represent the interrelationships between these operating data.

### 2.1.2 Temporal relationships of data in data center indoor system

The indoor thermal environment of a data center exhibits significant thermal inertia [26], causing a time delay between changes in observable temperature variations and system inputs (such as supply air temperature and IT load). Therefore, temperature changes at any given location are the result of past thermal states and equipment operating conditions. Given the characteristics of the indoor thermal environment, it is essential to incorporate the influence of historical system states and equipment conditions when predicting future temperature changes, as shown in Equation (1)

$$x_{t+1} = f(x_t, u_t, x_{t-1}, u_{t-1}, x_{t-2}, u_{t-2}, \ldots, x_{t-k}, u_{t-k}) \tag{1}$$

where $x_t$ and $u_t$ represent the system state and system input at timestep *t*.

### 2.1.3 Graph-based data structure

A graph is widely recognized as one of the most versatile, informative, and interpretable formats for data representation [27, 28]. A graph ***G*** can be defined by Equation (2):

Preprint not peer reviewed

This preprint research paper has not been peer reviewed. Electronic copy available at: https://ssrn.com/abstract=5292473

$$\boldsymbol{G} = (\boldsymbol{V}, \boldsymbol{E}) \tag{2}$$

where $\boldsymbol{V}$ is the set of nodes and $\boldsymbol{E}$ is the set of edges. A node $v_i \in \boldsymbol{V}$ represents a vertex, and an edge $e_{ij} = (v_i, v_j) \in E$ connects nodes $v_i$ and $v_j$.

The graph structure is typically described using an adjacency matrix, while the attributes of the nodes and edges are represented by a feature matrix. For a directed and connected graph with $N$ nodes, the adjacency matrix $\boldsymbol{A} = [a_{ij}] \in \mathbb{R}^{N \times N}$ is a Boolean matrix where $a_{ij} = 1$ if there is an edge from $v_i$ to $v_j$ (i.e., $e_{ij} \in E$), and $a_{ij} = 0$ if no edge exists between these nodes (i.e., $e_{ij} \notin E$).

For a graph with $N$ nodes, each having $M$-dimensional features over a time sequence $T$, the node/edge feature matrix $\boldsymbol{X} = [x_{i,k}^t] \in \mathbb{R}^{N \times M \times T}$ stores the associated attributes of the nodes and edges over time.

Graphs can be broadly classified into homogeneous and heterogeneous graphs. A homogeneous graph consists of a single type of nodes and edges, where the relationships between entities are of the same type. In contrast, a heterogeneous graph is associated with a node type mapping function $\varphi: \boldsymbol{V} \rightarrow \boldsymbol{P}$ and a edge type mapping function $\psi: \boldsymbol{E} \rightarrow \boldsymbol{R}$. Here, $\boldsymbol{P}$ and $\boldsymbol{R}$ are the sets of predefined node types and edge types, respectively, where $|\boldsymbol{P}| + |\boldsymbol{R}| > 2$.

In the context of predicting the indoor temperature field in data centers, while the node types are consistent (representing specific locations or areas within the facility), the influences between nodes are heterogeneous. Specifically, the relationships between nodes in the hot aisle are distinct from those between the cold aisle and hot aisle nodes, due to the different physical processes that govern these interactions. For instance, the thermal interactions in the hot aisle are primarily influenced by the airflow between nodes, whereas the interactions between the cold

Preprint not peer reviewed

This preprint research paper has not been peer reviewed. Electronic copy available at: https://ssrn.com/abstract=5292473

aisle and the hot aisle are primarily driven by the heat dissipation from the equipment in the racks. These variations necessitate the use of different edges to represent the distinct physical interactions between nodes.

Given this, a heterogeneous graph is required to effectively model the complex thermal environment within a data center. By employing a heterogeneous graph, we can capture the diverse physical processes and interactions between different areas of the data center, which is crucial for accurately predicting temperature distribution and dynamics. The ability to represent varying types of relationships between nodes enables a more precise understanding of the system's behavior, ultimately leading to more reliable predictions of the indoor thermal environment.

### 2.1.4 Heterogeneous graph representation of data center indoor thermal system

This section proposes a generic graph-based representation to model the indoor thermal environment of data centers, incorporating spatial and temporal information, as well as the influences between nodes. The spatial information in this representation includes the system state and location information stored at each node. The system state typically corresponds to physical quantities, such as temperature, at a given location, while the location information reflects the spatial characteristics of the node's position within the data center. The temporal aspect, on the other hand, incorporates time-dependent operating data, capturing how system states evolve over time. Finally, the spatial influences between nodes, which are primarily determined by factors such as location proximity and airflow patterns, govern how the system temperature at different locations interact with each other.

Preprint not peer reviewed

This preprint research paper has not been peer reviewed. Electronic copy available at: https://ssrn.com/abstract=5292473

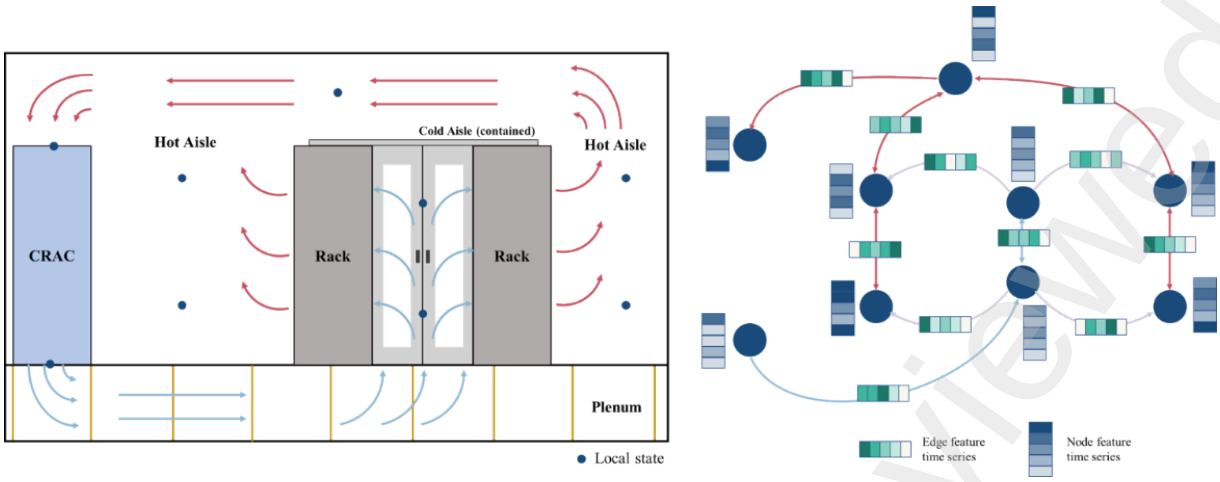


(a)Data center (b) Graph presentation

Fig. 1 Airflow organization in a data center and the spatio-temporal heterogeneous-graph-based data structure.

An example of a heterogeneous-graph-based representation for a data center with cold aisle containment is presented in Fig. 1(b) to illustrate the application of the proposed method. Fig. 1 (a) illustrates the airflow organization of an underfloor air distribution, cold aisle containment data center and Fig. 1(b) shows its corresponding spatio-temporal heterogeneous graph representation. In this structure, data are sequentially stored on both nodes and edges, where blue features represent node attributes, and green features represent edge attributes. The connections capture the influence between different nodes. A detailed description of the proposed heterogeneous-graph-based representation is provided, covering the node features, adjacency matrix, edge attributes, and edge types.

1) Node feature

In the graph-based representation, nodes represent the system states of the indoor thermal environment in the data center. Each node features both physical characteristics and spatial coordinates, which collectively describe its state and location. The physical feature is denoted as

Preprint not peer reviewed

This preprint research paper has not been peer reviewed. Electronic copy available at: https://ssrn.com/abstract=5292473

***h***, and the spatial coordinate feature is denoted as ***pos***, representing the state and location of the $i$-th node, respectively.

Temperature is commonly used as the key indicator of the system's state, and the feature of the $i$-th node at time $t$ is defined as shown in Equation (3):

$$h_{i,t} = T_{i,t} \tag{3}$$

The physical quantities representing local temperatures in the data are divided into two types based on their data sources. The first type consists of sensor measurements, which reflect the local temperature at the sensor's location. The second type is derived from the operational conditions of the equipment, such as the supply air temperature of the air conditioning units. It is important to note that, although the supply air temperature would typically be treated as an input and sensor temperature as an output in traditional system models, the graph structure itself describes the interactions between nodes and does not follow the traditional distinction between system inputs and outputs. In graph-based prediction, both input and output are represented as graphs. However, the prediction of variables such as supply air temperature, which are determined by the HVAC system, does not carry meaningful value on its own. During both training and inference, these variables should be appropriately handled to ensure that the causal relationships in the model are correctly maintained. Therefore, similar to sensor temperatures, supply air temperature and return air temperature also represent the local temperatures at the corresponding equipment locations within the enclosure.

2) Adjacency matrix

The adjacency matrix is commonly used to represent a graph, where the elements indicate the

Preprint not peer reviewed

This preprint research paper has not been peer reviewed. Electronic copy available at: https://ssrn.com/abstract=5292473

presence or absence of edges between pairs of nodes. The adjacency matrix reflects the physical configuration of the data center, where system states (i.e., temperature) at different locations are interconnected. This influence is typically approximated as existing only between nodes that are spatially close. The distance threshold for connectivity can be determined based on the size of the data center and the configuration of the cold and hot aisles. A different distance threshold indicates the extent of influence the system state at a particular location has on the surrounding locations. For modeling purposes, this threshold is considered a constant across the entire data center. Additionally, the layout of the data center directly affects the indoor airflow pattern. For areas that are physically separated, the influence between them follows the actual airflow isolation. In the case of a complete seal—such as the area above and below the floor or the partition between hot and cold aisles—there is no connection between the areas. In contrast, for incompletely sealed areas, such as the front and rear of racks with airflow leakage, the connections are bi-directional. Connections along the main airflow direction of the racks represent influence transmitted through the racks, while pairs of connections indicate the leakage through racks.

3) Edge attribute

In graph convolutional processes, edge features play a crucial role in influencing the features of their target nodes. Therefore, edge features should include variables that impact the indoor thermal environment of a server room. For example, when the node feature is local temperature, relevant variables such as rack power and CRAH fan speed should be incorporated as edge features. However, directly using all environmental variables as edge features introduces

Preprint not peer reviewed

This preprint research paper has not been peer reviewed. Electronic copy available at: https://ssrn.com/abstract=5292473

significant challenges in model implementation. First, the large number of variables affecting the indoor thermal environment increases the model's complexity and training cost. A typical server room houses hundreds of racks and dozens of air conditioning units, making the inclusion of all these variables as edge features impractical. This not only inflates the number of model parameters but also requires larger training datasets to achieve the desired prediction accuracy.

Second, the system's state at a given location is primarily influenced by nearby equipment. Given that the floor area of a common operational server room is typically around 1,000 square meters, and the area represented by each feature point is approximately 10 square meters, the equipment influencing a given area is often localized. Therefore, to improve model feasibility and align with the practical server room environment, only the parameters of devices in close proximity to the area between two nodes are considered as edge features. When selecting edge features, the proximity can be determined either by the physical dimensions of the server room or by identifying the nearest $N$ devices. In this study, the latter approach is adopted, where the $N$ closest devices are selected to define edge features, ensuring consistent dimensionality for all edge features within the graph.

4) Edge type

The type of an edge determines how the source node influences the target node. Different physical processes lead to different types of interactions between nodes. For instance, the interactions between nodes in the cold aisle differ from those in the hot aisle, representing two distinct edge types. Similarly, for nodes located between the hot and cold aisles in front of racks, the influence along the airflow direction differs from that along the leakage direction (opposite

Preprint not peer reviewed

This preprint research paper has not been peer reviewed. Electronic copy available at: https://ssrn.com/abstract=5292473

to the airflow). These differences in interaction modes should be reflected as distinct edge types.

**2.2 GNN**

As indicated in [29], graph Neural Networks (GNNs) are a class of deep learning models designed to process graph-structured data. Unlike traditional neural networks, such as Convolutional Neural Networks (CNNs), which are primarily used for grid-like data such as images [30], GNNs are capable of learning from irregular structures where data points are connected by edges. GNNs work by iteratively aggregating information from neighboring nodes in a graph, allowing the model to capture complex relationships between data points that are linked through edges. As a type of convolutional network, GNNs share similarities with CNNs, such as their ability to process local interactions and learn hierarchical representations. However, unlike traditional Artificial Neural Networks (ANNs), which rely on fully connected layers and learn individual weights for each connection, GNNs use shared parameters across nodes and edges, enabling the model to generalize better across large and diverse graph structures. This parameter sharing mechanism, similar to CNNs, allows GNNs to efficiently capture local dependencies and scale well with graph size, making them highly suitable for tasks involving large, complex networks.

On the other hand, while CNNs excel at processing regular grid data (such as images) by using local receptive fields and pooling operations, they are limited when it comes to irregular data structures. CNNs assume that the relationships between neighboring data points are fixed and equally spaced, which does not hold true for graph-structured data. In contrast, GNNs are designed specifically to handle the flexible, sparse connections that define graph structures. This

Preprint not peer reviewed

This preprint research paper has not been peer reviewed. Electronic copy available at: https://ssrn.com/abstract=5292473

makes GNNs highly effective at processing non-Euclidean data, where the spatial or topological relationships between nodes are critical, such as in the case of modeling the interactions between various locations in a data center's thermal environment.

### 2.2.1 Massage passing

Graph neural networks (GNNs) utilize an information propagation process to capture dependencies between nodes in a graph structure. Each layer in a GNN aggregates information from neighboring nodes and updates node features accordingly [31]. This process can be described mathematically as Equation (4):

$$\boldsymbol{H}^{(l+1)} = \sigma\left(\tilde{\boldsymbol{D}}^{-\frac{1}{2}}\tilde{\boldsymbol{A}}\tilde{\boldsymbol{D}}^{-\frac{1}{2}}\boldsymbol{H}^{(l)}\boldsymbol{W}^{(l)}\right) \tag{4}$$

where $\boldsymbol{H}^{(l)}$ represents the node feature matrix at layer $l$, $\tilde{\boldsymbol{A}}$ is the normalized adjacency matrix, and $\tilde{\boldsymbol{D}}$ is the degree matrix. The matrix multiplication is followed by a non-linear activation function $\sigma$, such as ReLU, which allows the model to learn complex relationships.

The matrix-based formulation can also be expressed as a node-level equation to more clearly illustrate the information propagation between nodes, as Equation (5):

$$h_i^{(l+1)} = \sum_{j\in\mathcal{N}(i)} \frac{1}{\sqrt{\deg(i)}\cdot\sqrt{\deg(j)}} \cdot \left(\boldsymbol{W}^T \cdot h_j^{(l)}\right) + \boldsymbol{b} \tag{5}$$

here, $h_i^{(l)}$ denotes the feature vector of node $i$ at layer $l$, and $\mathcal{N}(i)$ represents the neighboring nodes of node $i$. This aggregation involves combining the features of neighboring nodes in a normalized manner, ensuring that nodes with varying degrees contribute proportionally to the updated feature.

When considering edge features, the information propagation process is modified to include the edge attributes, which reflect the interactions between nodes. For instance, in the context of

Preprint not peer reviewed

This preprint research paper has not been peer reviewed. Electronic copy available at: https://ssrn.com/abstract=5292473

a data center thermal environment, edge features may represent factors such as airflow, power loads, or heat transfer rates, as shown by Equation (6):

$$h_i^{(l+1)} = \sum_{j \in \mathcal{N}(i)} \frac{1}{\sqrt{\deg(i)} \cdot \sqrt{\deg(j)}} \cdot \left(h_i^{(l)} + \boldsymbol{W}^T \cdot [h_j^{(l)} || e_{ij}]\right) + \boldsymbol{b} \tag{6}$$

In this equation, $e_{i,j}$ represents the edge feature between nodes i and j, and || denotes the concatenation of the node features and edge features. Equation (6) enables the model to account for both neighboring node features and the influence of edge-based interactions between nodes.

It is important to note that the future temperature of each node in the graph-represented data center not only depends on the temperature of its neighboring nodes but also on its own history temperature. This temporal aspect is crucial for accurately modeling the thermal dynamics. Therefore, the term $h_i^{(l)}$ , representing the feature of node $i$ at layer $l$, is included in the equation. This term accounts for the self-influence of the node, ensuring that its own state (including past temperatures) is considered when updating the node's feature in subsequent layers. This is particularly important for modeling systems with significant inertia, as such temperature fields for which past conditions heavily influence future states.

### 2.2.2 Heterogeneous edge-enhanced graph attention network (HEGAT) layer

Fig. 2 illustrates the structure of an HEGAT layer, demonstrating the message passing process for node $i$, which encapsulates the execution mechanism of the proposed network. This process enables the model to aggregate information from neighboring nodes and edges, capturing spatial dependencies within the heterogeneous graph. The proposed layer primarily consists of four components: node projection, edge projection, multi-head attention mechanism, and node feature aggregation.

Preprint not peer reviewed

This preprint research paper has not been peer reviewed. Electronic copy available at: https://ssrn.com/abstract=5292473

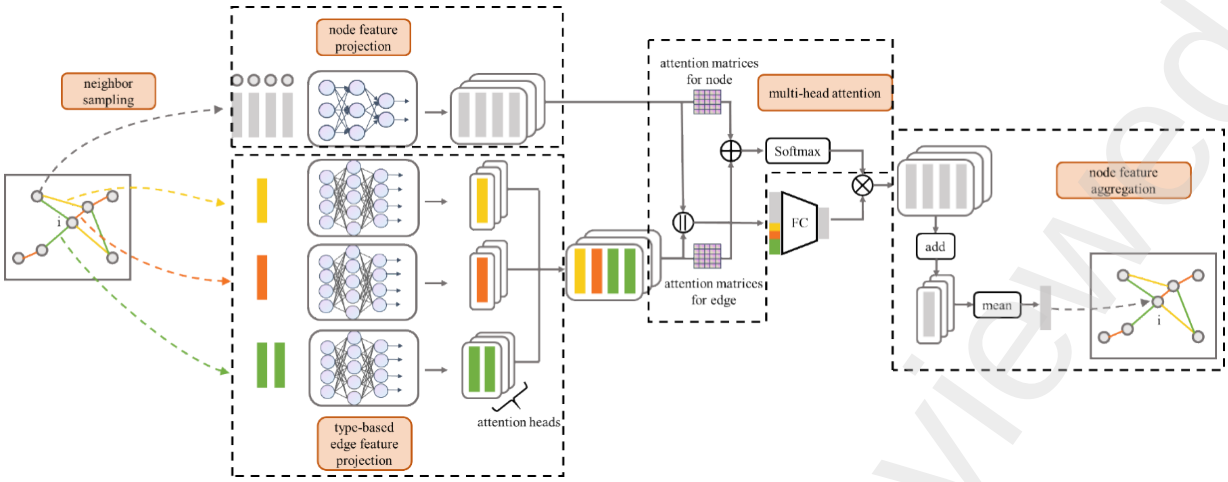


Fig. 2 Schematic diagram of the HEGAT layer structure.

1) Node feature projection

In this step, the node features are projected into a higher-dimensional space to capture richer representations of the data. Since all nodes are of the same type, a shared projection transformation is applied to all nodes. The node projection operation can be expressed as Equation (7):

$$h'_i = \boldsymbol{\Theta_h} h_i \tag{7}$$

where $h_i$ represents the feature vector of the $i$-th node, and $h'_i$ denotes the projected node feature in the higher-dimensional space. And $\boldsymbol{\Theta_h}$ represents the learnable projection parameters (e.g., weight matrices) for node features.

2) Edge feature projection

In the previous work[32] on heterogeneous graph neural networks with multiple edge types, edge types are often treated as edge features, or combined with edge features to form new feature representations. However, this approach is not appropriate for the temperature field prediction

Preprint not peer reviewed

This preprint research paper has not been peer reviewed. Electronic copy available at: https://ssrn.com/abstract=5292473

scenario in data center enclosures. In this scenario, each edge in the heterogeneous graph is associated with local device operational conditions as features, and different edge types represent distinct physical processes. While the method adopted in work[32] reduces the number of trainable parameters and required samples by concatenating edge type indicators (e.g., 0, 1, 2, 3) with edge features and projecting the combined representation into a higher-dimensional space via globally shared parameters, it may not be well suited for modeling data center environments. This approach implicitly assumes that the influences of different edge types are sufficiently similar to be captured by a single shared transformation. However, in data center scenarios where the interactions between nodes vary significantly across different spatial zones, such parameter sharing will limit the model's capacity to distinguish heterogeneous relational patterns. Nonetheless, the approach of concatenating additional information into edge features can help address the spatial relationships between nodes. Hence, the edge projection is formulated as Equation (8):

$$e'^{attr}_{ij} = \sum_{\boldsymbol{t} \in \boldsymbol{e}^{type}} \boldsymbol{\Theta}^{\boldsymbol{t}}_{\boldsymbol{e}} [e^{attr}_{ij} || pos_i - pos_j] \tag{8}$$

where || represents the concatenation operation, which combines the edge feature vector $e^{attr}_{ij}$ with the relative spatial information $pos_i - pos_j$ into a unified representation that incorporates both attribute features and spatial relationships. $\boldsymbol{\Theta}^{\boldsymbol{t}}_{\boldsymbol{e}}$ represents the learnable projection parameters (e.g., weight matrices) for edge type $t$, which are used to map the concatenated features into a latent space. And the summation over all edge types aggregates their contributions, resulting in the projected edge attribute $e'^{attr}_{ij}$ that effectively captures the multi-type edge information in the heterogeneous graph.

The masking mechanism in the formula ensures type-specific processing, where the

Preprint not peer reviewed

This preprint research paper has not been peer reviewed. Electronic copy available at: https://ssrn.com/abstract=5292473

projected features of edges that do not belong to the current type $t$ are set to zero. This ensures that only features of valid edge types contribute to the projection, enabling the model to effectively handle heterogeneous graphs.

3) Multi-head attention mechanism

The attention mechanism employed in this work is inspired by the Graph Attention Network (GAT) [33], where attention coefficients are computed to capture the importance of neighboring nodes during the message passing process. In a GAT-based approach, attention is calculated by learning a set of attention weights for each pair of neighboring nodes. This allows the model to selectively focus on the most relevant neighbors and disregard less influential ones. The attention calculation is expressed as Equation (9):

$$\alpha_{ij} = \frac{\exp\left(\mathrm{LeakyReLU}\left(a_s^\top h'_i + a_t^\top h'_j + a_e^\top e'^{attr}_{ij}\right)\right)}{\sum^{k\in\mathcal{N}_i} \exp\left(\mathrm{LeakyReLU}\left(a_s^\top h'_i + a_t^\top h'_k + a_e^\top e'^{attr}_{ik}\right)\right)} \tag{9}$$

where $\alpha_{ij}$ represents the attention weight between node $i$ and node $j$, and the attention weight is computed based on the projected features of the nodes ($h'_i$, $h'_j$) as well as the projected edge features ($e'^{attr}_{ij}$). The LeakyReLU activation function introduces non-linearity to the attention mechanism. The division by the sum in the denominator normalizes the attention scores across all neighboring nodes. This normalization operation helps to reduce the influence of nodes with excessively high attention weights, preventing overfitting and promoting more stable learning.

The attention mechanism offers several key advantages in graph-based models. Firstly, it allows for selective focus on the most relevant neighbors by assigning varying attention weights, enabling the model to efficiently capture complex dependencies in the graph. This flexibility is particularly useful for handling graphs with nodes of varying degrees, as the mechanism

Preprint not peer reviewed

This preprint research paper has not been peer reviewed. Electronic copy available at: https://ssrn.com/abstract=5292473

adaptively adjusts the influence of each neighbor, regardless of its degree. Secondly, the attention mechanism facilitates inductive learning, enabling the model to generalize to unseen nodes or graphs. This makes it highly suitable for the applications where the model must handle new, previously unseen data, such as predicting temperature distributions in different data center configurations.

4) Node feature aggregation

For node feature updating, we adopt the message passing framework described in Section 2.2.1. During the aggregation of neighboring node information, attention coefficients are introduced to weigh the influence of different nodes. This ensures that the contribution of each neighboring node is appropriately scaled according to its relevance to the target node.

The node feature aggregation is formulated as Equation (10):

$$h'_i = \frac{1}{M}\sum_{m=1}^{M} \left(h'^{m}_{i} + \sum_{j\in\mathcal{N}_i} \alpha^{m}_{ij}\, \mathbf{W}^{m}_{h}\, [h'^{m}_{i} || e'^{m,attr}_{ij}]\right) \tag{10}$$

here, $M$ represents the number of attention heads, which are used to capture multiple perspectives of the node's neighborhood. Each attention head corresponds to a distinct set of parameters and learns a different representation of the node and its neighbors. The subscript $m$ indicates the attention head index. For each $m$, the model computes a distinct weighted sum of neighboring node features and edge features. The results from all attention heads are then averaged (normalized by $\frac{1}{M}$) to form the final aggregated node feature, $h'_i$.

By using multiple attention heads, the model can capture a broader range of relationships and improve its capacity to model complex graph structures. The averaging operation ensures that the influence of each attention head is equally weighted in the final aggregation, promoting

Preprint not peer reviewed

This preprint research paper has not been peer reviewed. Electronic copy available at: https://ssrn.com/abstract=5292473

a more robust and balanced feature representation.

## 2.3 RNN

Recurrent Neural Networks (RNNs) are a class of deep learning models designed to handle sequential data [34], such as time-series, text, audio, and video. Unlike feedforward neural networks, RNNs possess a recurrent structure that allows them to maintain memory of previous time steps. This ability to pass information from one time step to the next makes RNNs well-suited for tasks involving sequential dependencies. A standard RNN consists of recurrent cells, such as sigma or tanh cells, which transform input data at each time step based on previous hidden states. The operation of an RNN at time step $t$ is typically expressed as Equation (11) and (12):

$$h_t = \sigma(W_h h_{t-1} + W_x x_t + b) \tag{11}$$

$$y_t = h_t \tag{12}$$

where $h_t$ is the hidden state at time $t$, $x_t$ is the input at time $t$, $W_h$ and $W_x$ are weight matrices, $b$ is the bias term, and $\sigma$ is a non-linear activation function, typically sigmoid or tanh.

Despite their potential, traditional RNNs face significant challenges when learning long-range dependencies in sequences. Specifically, they are prone to the vanishing gradient problem, where the gradients used to update the network's parameters become very small during backpropagation through many time steps. This prevents the network from effectively learning long-term dependencies. Conversely, RNNs can also suffer from the exploding gradient problem, where large gradients cause the model's weights to update too drastically, resulting in instability during training.

Preprint not peer reviewed

This preprint research paper has not been peer reviewed. Electronic copy available at: https://ssrn.com/abstract=5292473

To address these issues, advanced variants of RNNs, such as Long Short-Term Memory (LSTM) networks, have been introduced [35]. LSTMs are designed to overcome the limitations of traditional RNNs by incorporating special components called gates that control the flow of information. These gates allow the network to selectively retain or forget information, thereby enabling it to capture long-term dependencies. The key gates in an LSTM are the forget gate, the input gate, the candidate gate, and the output gate. These gates work together to regulate the cell state, which acts as a memory unit. The LSTM equations for these gates are represented by Equations (13) - (18) [36]:

$$f_t = \sigma(W_{fh}h_{t-1} + b_{fh} + W_{fx}x_t + b_{fx}) \tag{13}$$

$$i_t = \sigma(W_{ih}h_{t-1} + b_{ih} + W_{ix}x_t + b_{ix}) \tag{14}$$

$$\tilde{c}_t = tanh(W_{\tilde{c}h}h_{t-1} + b_{\tilde{c}h} + W_{\tilde{c}x}x_t + b_{\tilde{c}x}) \tag{15}$$

$$c_t = f_t \cdot c_{t-1} + i_t \cdot \tilde{c}_t \tag{16}$$

$$o_t = \sigma(W_{oh}h_{t-1} + b_{oh} + W_{ox}x_t + b_{ox}) \tag{17}$$

$$h_t = o_t \cdot tanh(c_t) \tag{18}$$

where $h_t$ is the hidden state at time $t$, $c_t$ is the cell state at time $t$, $x_t$ is the input at time $t$. The variables $i_t$, $f_t$, $\tilde{c}_t$, and $o_t$ are the input, forget, candidate, and output gates, respectively. $\sigma$ is the sigmoid activation function, and $\cdot$ represents the Hadamard (element-wise) product.

The LSTM allows information from earlier time steps to be reinjected into the network by determining what percentage of past information should affect the present. This mechanism mitigates the vanishing gradient problem by enabling the network to retain important information over long sequences, thus allowing LSTMs to learn long-term dependencies more effectively than traditional RNNs. The introduction of LSTM networks has greatly improved the ability of

Preprint not peer reviewed

This preprint research paper has not been peer reviewed. Electronic copy available at: https://ssrn.com/abstract=5292473

RNNs to handle tasks that require learning from long-term temporal patterns, such as speech recognition, machine translation, and time-series prediction.

## 2.4 RNN-HEGAT model for spatio-temporal modeling

As illustrated in Fig. 3, a stacked RNN-HEGAT network is employed to predict the indoor thermal environment in data centers. The model utilizes historical local temperature and operating conditions of the equipment over multiple time periods to forecast the future system temperature at the next time step. It primarily consists of two components: the LSTM layer, introduced in Section 2.3, which captures the temporal dependencies of the features, and the HEGAT layer, described in Section 2.2, which extracts the spatial relationships among the features.

The input to the model is a spatio-temporal graph that includes the adjacency matrix $\boldsymbol{A} = [a_{ij}] \in \mathbb{R}^{N\times N}$, node feature matrix $\boldsymbol{h} = [T_{i,t}] \in \mathbb{R}^{N\times T\times 1}$(node feature with one dimension, T), edge feature matrix $\boldsymbol{e^{attr}} = [e_{ij}^{attr,t}] \in \mathbb{R}^{M\times T\times Q}$, node position matrix $\boldsymbol{pos} = [x_i, y_i, z_i] \in \mathbb{R}^{N\times 3}$, and edge type matrix$\boldsymbol{e^{type}} = [e_{ij}^{type}] \in \mathbb{R}^{M\times 1}$, which can be described as Equation (19).

$$\boldsymbol{G_{input}} = (\boldsymbol{A}, \boldsymbol{h}, \boldsymbol{pos}, \boldsymbol{e^{attr}}, \boldsymbol{e^{type}}) \tag{19}$$

The output is the node feature matrix at the next time step $\boldsymbol{h^{(l+1)}}$, which represents the system temperature distribution. Since the predicted locations correspond one-to-one with the nodes in the input graph, the output matrix serves as the node feature matrix for the next time step. This ensures that the model can be iteratively executed in iterative prediction scenarios.

Preprint not peer reviewed

This preprint research paper has not been peer reviewed. Electronic copy available at: https://ssrn.com/abstract=5292473

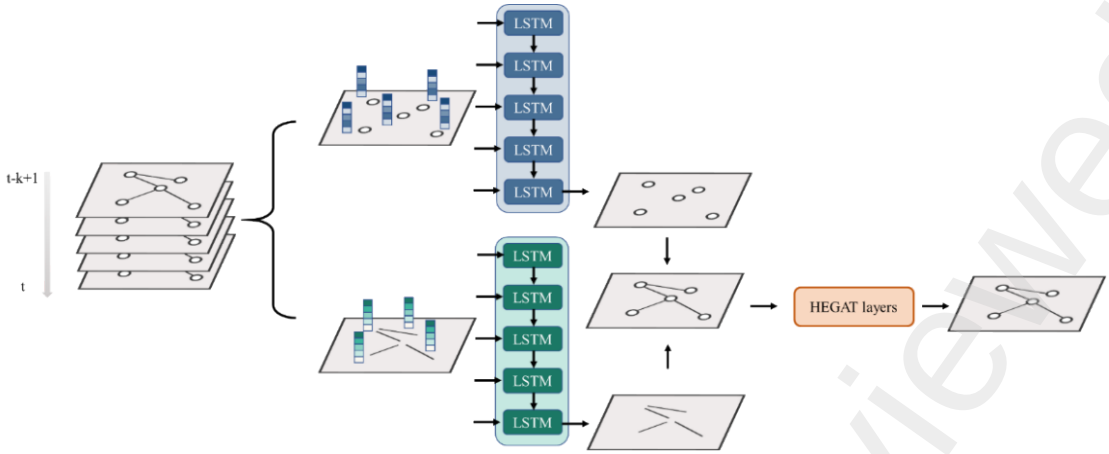


Fig. 3 Network architecture of the spatio-temporal prediction model for DC indoor thermal environment.

# 3 Case study

## 3.1 Introduction and data description of the target data center's indoor thermal system

The case study is conducted on a data center in operation, located in Shanghai, China[9]. Each compartment within the data center features similar layout and structure, utilizing a dispersed air supply system with a hot aisle containment and ceiling return airflow organization. Each compartment is equipped with two CRAH (Computer Room Air Handler), each housing eight CRAH units, totaling 16 units that cool 176 racks arranged in ten rows, as shown in Fig. 4.

A total of 28 temperature sensors are distributed in the hot and cold aisles at a height of 2.1 meters to monitor the temperature distribution within the data center. Simultaneously, the supply air temperature, return air temperature, fan speed rate, and the load of each rack are measured by sensors within the equipment and uploaded to the monitoring platform for record-keeping. Data collection occurred on March 28, 2024, and the statistical data is shown in Table 1. The sensor sampling frequency is 10 seconds, and to capture the short-term impact of rack loads on the

Preprint not peer reviewed

This preprint research paper has not been peer reviewed. Electronic copy available at: https://ssrn.com/abstract=5292473

temperature field, no averaging is performed over a larger time range.

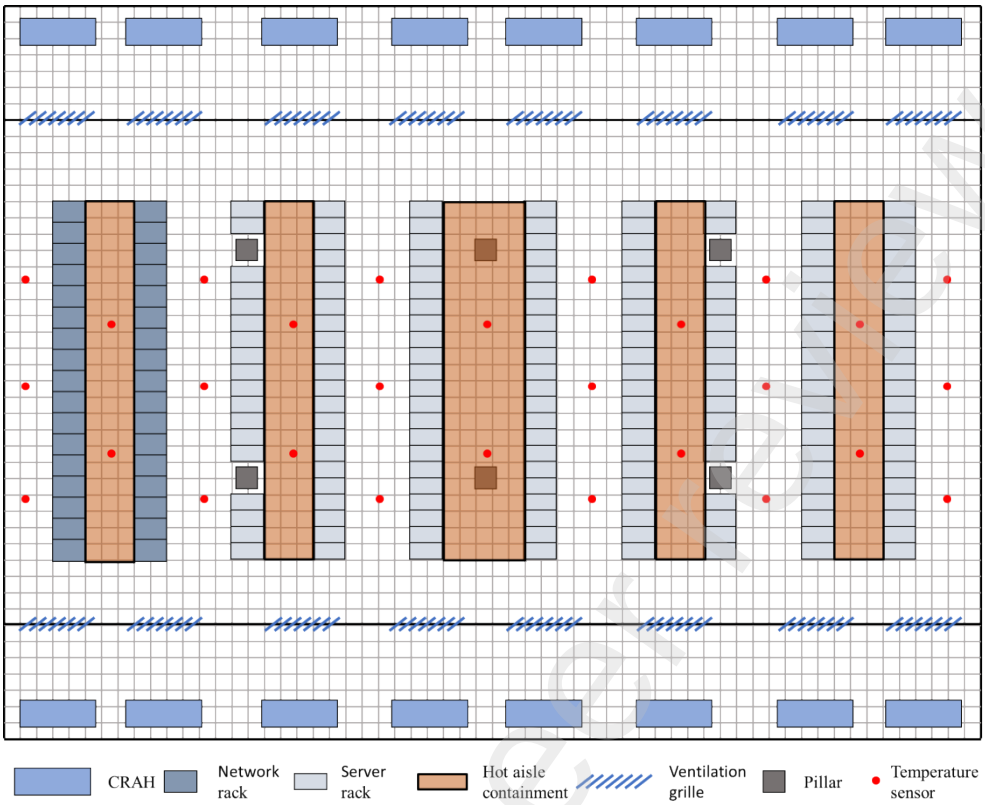


Fig. 4 Schematic layout of the data center server room.

Table 1 Description of the historical data.

| Device | Quantity | Measurements | Max | Min |
|---|---|---|---|---|
| CRAH unit | 16 | Fan speed rate(%) | 76.2 | 0 |
| | | Supply air temperature(℃) | 26.7 | 19.7 |
| | | Return air temperature(℃) | 35 | 22.4 |
| Rack | 218 | Power(kW) | 15.54 | 0 |
| IoT sensor(at 2.1 m) | 28 | Temperature(℃) | 38.6 | 21.2 |

To ensure that all variables are within the same range, min-max normalization is adopted. After eliminating invalid data, the entire dataset is segmented into 8580 time slices in chronological order via a sliding-window manner. After slicing, data with noticeable variations

Preprint not peer reviewed

This preprint research paper has not been peer reviewed. Electronic copy available at: https://ssrn.com/abstract=5292473

in input variables (approximately 5%) is selected for the test set. The remaining data is split into training and validation sets at an 8:2 ratio.

### 3.2 Data structure for the graph-based spatio-temperal model

In this section, we model the actual server room described in Section 3.1 using the heterogeneous graph representation introduced in Section 2.1.4. The node features of the heterogeneous graph correspond to sensor-recorded temperatures. The following discussion focuses on the determination of node connectivity, edge features, and edge types.

For the server room described in Section 3.1, nodes are connected based on the scheme illustrated in Fig. 5. For clarity, only a single hot aisle and its surrounding area are displayed. In Fig. 5, different colors represent different edge types, each corresponding to a distinct physical process, while arrow directions indicate the direction of influence between nodes. In the implementation, adjacency matrices and tensors are used to encode the connectivity patterns and edge types.

Edge features are selected according to the method described in Section 2.1.4. Specifically, the fan speeds rate of the four nearest air conditioning units and the loads of the eight nearest server racks are chosen as edge attributes. For edges that do not pass through operating racks, the corresponding power feature are assigned a value of zero. A graph-based representation of the entire data center server room is shown in Fig. 6.

Preprint not peer reviewed

This preprint research paper has not been peer reviewed. Electronic copy available at: https://ssrn.com/abstract=5292473

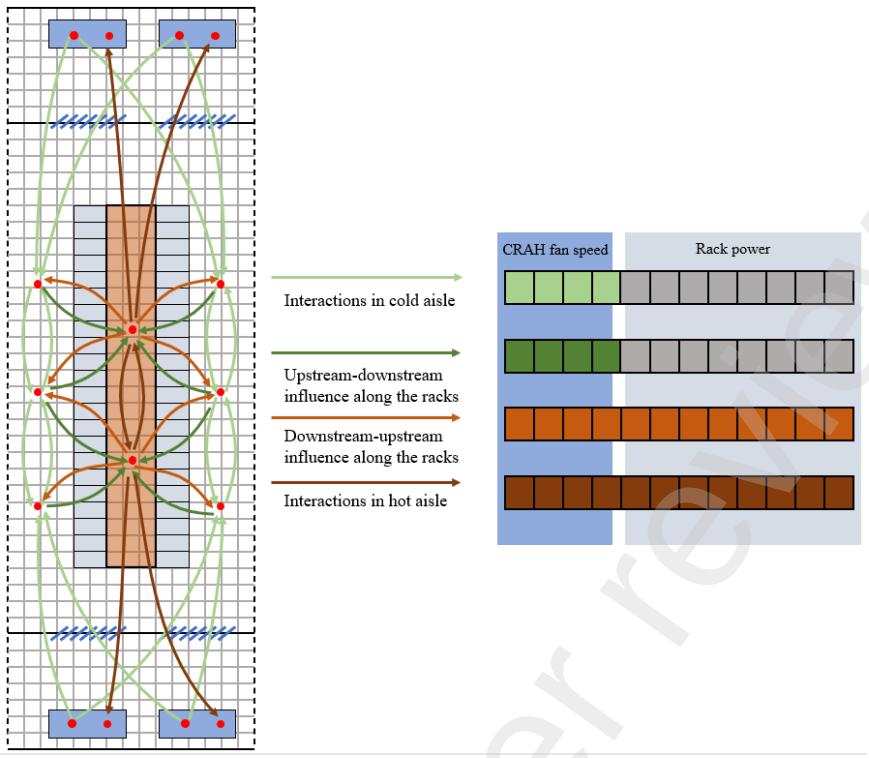


Fig. 5 Illustration of a heterogeneous graph structure near a hot aisle and the selection of edge features and types

Preprint not peer reviewed

This preprint research paper has not been peer reviewed. Electronic copy available at: https://ssrn.com/abstract=5292473

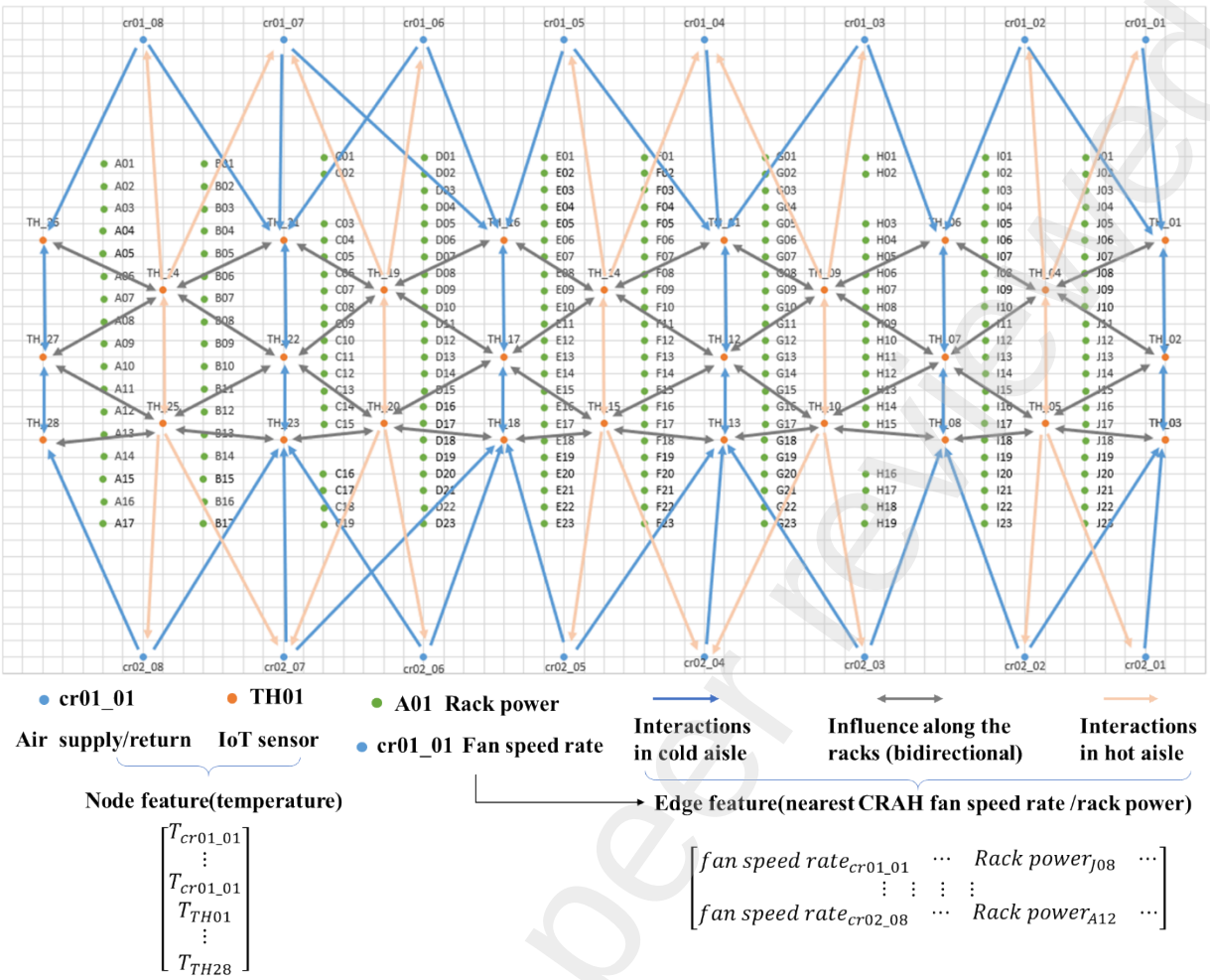


Fig. 6 Graph-based representation of the data center server room

### 3.3 Hyperparameter tuning and training

Both the data structure and the predictive model were implemented using the Python programming language, with PyTorch Geometric [37] as the underlying framework. During training, the MSE was employed as both the loss function and the evaluation metric, defined by Equation (20):

$$MSE = \frac{1}{n}\sum_{i=1}^{n} (y_i - \hat{y}_i)^2 \tag{20}$$

To identify the most accurate combination of node connectivity strategy and edge feature selection method, we evaluated the model's performance under two different connectivity

Preprint not peer reviewed

This preprint research paper has not been peer reviewed. Electronic copy available at: https://ssrn.com/abstract=5292473

strategies and two different edge feature selection approaches, comparing their MSE on the validation set. The specific configurations are summarized in Table 2, where:

a) The two connectivity strategies correspond to distance thresholds of 10 m and 12 m.

b) The two edge feature selection methods include:

Feature Set 1: Fan speeds from the four nearest air conditioning units and loads from the eight nearest server racks.

Feature Set 2: Fan speeds from the six nearest air conditioning units and loads from the twelve nearest server racks.

Table 2 Connectivity and edge feature selection strategies for different graph structures.

| Graph structure | A | B | C | D |
|---|---|---|---|---|
| Node connectivity | Connectivity Type 1 | Connectivity Type 1 | Connectivity Type 2 | Connectivity Type 2 |
| Edge feature | Feature Set 1 | Feature Set 1 | Feature Set 2 | Feature Set 2 |

For each structural configuration, Bayesian Optimization (BO) was employed for hyperparameter tuning. Compared with grid search and random search, BO requires fewer iterations to achieve optimal performance. The optimized hyperparameters for each configuration are presented in Table 3.

Preprint not peer reviewed

This preprint research paper has not been peer reviewed. Electronic copy available at: https://ssrn.com/abstract=5292473

Table 3 Hyperparameter optimization settings for different structures.

| Hyperparameters | Value range | Best value found | | | |
|---|---|---|---|---|---|
| | | Structure A | Structure B | Structure C | Structure D |
| Number of recurrent units in node recurrent layer | 4, 8, 12 | 8 | 4 | 4 | 4 |
| Number of recurrent units in edge recurrent layer | 8, 12, 16 | 12 | 12 | 12 | 4 |
| Attention head number in GAT layer | 8, 12, 16 | 12 | 12 | 16 | 8 |
| Number of MLP layers for node feature projection | 2, 4, 6 | 2 | 2 | 2 | 2 |
| Number of MLP layers for edge feature projection | 2, 4, 6 | 2 | 2 | 2 | 2 |

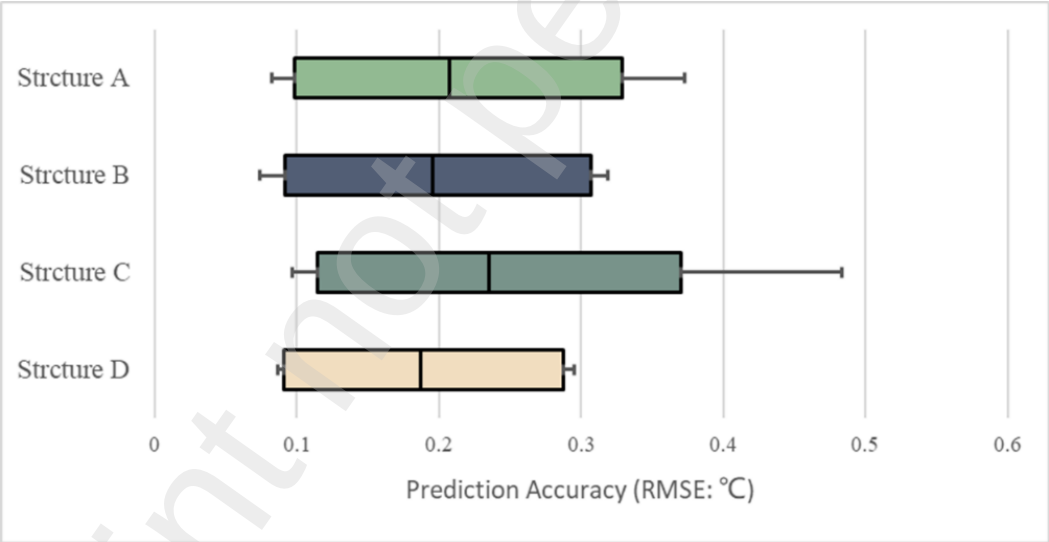


Fig. 7 Model prediction accuracy with different structures.

Each model structure undergoes 20 independent training runs, and the corresponding prediction accuracy results are shown in Fig. 7. Based on the comparative analysis of different graph structures and their impact on prediction accuracy, structure D was selected for subsequent experiments and discussions.

Preprint not peer reviewed

This preprint research paper has not been peer reviewed. Electronic copy available at: https://ssrn.com/abstract=5292473

To mitigate overfitting on the training set, Early Stopping (ES) was applied during training. Specifically, if the validation loss did not improve after a predefined number of iterations (in this study is set as 100), the model parameters corresponding to the best validation performance were saved.

### 3.4 Iterative spatio-temporal prediction evaluation

In this section, the proposed prediction model is evaluated under an iterative forecasting scenario to predict the temperature distribution in the data center server room. Iterative forecasting refers to a prediction strategy where the model's output at the previous time step—i.e., the predicted temperatures at all observation points—is used as input for the next time step.

Although error accumulation is an inherent issue in iterative forecasting—where prediction errors at each step propagate and influence subsequent predictions, leading to increasing discrepancies over extended forecasting horizons—such an approach is essential for model-based control algorithms. These algorithms rely on the model's ability to provide accurate long-term temperature field predictions under dynamic equipment operating conditions, ensuring optimal system performance.

Given this practical application scenario, the model evaluation in this subsection is conducted entirely under the iterative forecasting setting. The test dataset used for iterative forecasting is the same as that selected in Section 3.1. Since this dataset exhibits significant fluctuations, it serves as a suitable test case to assess the model's long-term predictive performance under highly dynamic conditions.

Preprint not peer reviewed

This preprint research paper has not been peer reviewed. Electronic copy available at: https://ssrn.com/abstract=5292473

### 3.4.1 Iterative forecasting curves

Fig. 8 presents the iterative forecasting results of the model on the test set. To evaluate the model's performance under conditions with high input variability, we selected measurement points located in the cold and hot aisles near the air conditioning unit with the most significant fluctuations in supply air temperature. The variations in supply air temperature, fan speed, and the corresponding air conditioning unit's location are illustrated in Fig. 8(a) and Fig. 8(b). To enhance clarity, the selected prediction results for these measurement points are presented in Fig. 8(c)-(h), where the blue curve represents the iterative forecasted outputs, and the yellow curve denotes the ground truth.

At approximately 500 seconds, the supply air temperature of the selected air conditioning unit begins to decrease, followed by an increase, while the fan speed starts to decrease at around 550 seconds. The temperature variations in the cold aisle measurement points are directly influenced by changes in supply air temperature, leading to a similar trend. As shown in Fig. 8(c) to Fig. 8(f), the predicted temperature curve successfully captures this trend, indicating that the model accurately forecasts both the pattern and magnitude of temperature variations in the cold aisle.

In contrast, the temperature in the hot aisle is influenced by the operating conditions of multiple adjacent air conditioning units, making it less sensitive to changes in any single unit. Consequently, its temperature variation does not precisely mirror that of a single air conditioning unit, but it still reflects its overall impact. The forecasted results in Fig.8 (g) demonstrate that the temperature in the hot aisle exhibits a gradual increase in response to the overall rise in supply air temperature, aligning well with the actual measured values. This suggests that the model

Preprint not peer reviewed

This preprint research paper has not been peer reviewed. Electronic copy available at: https://ssrn.com/abstract=5292473

effectively captures the distinct relationships between temperature variations in the cold and hot aisles.

Finally, return air temperature is directly influenced by the temperature in the hot aisle, resulting in a trend similar to that of the adjacent hot aisle nodes. Due to the sensor's resolution of 0.1°C, the measured return air temperature curve appears somewhat discrete. However, as shown in Fig. 8(h), the predicted outputs align well with the ground truth, maintaining overall trend consistency.

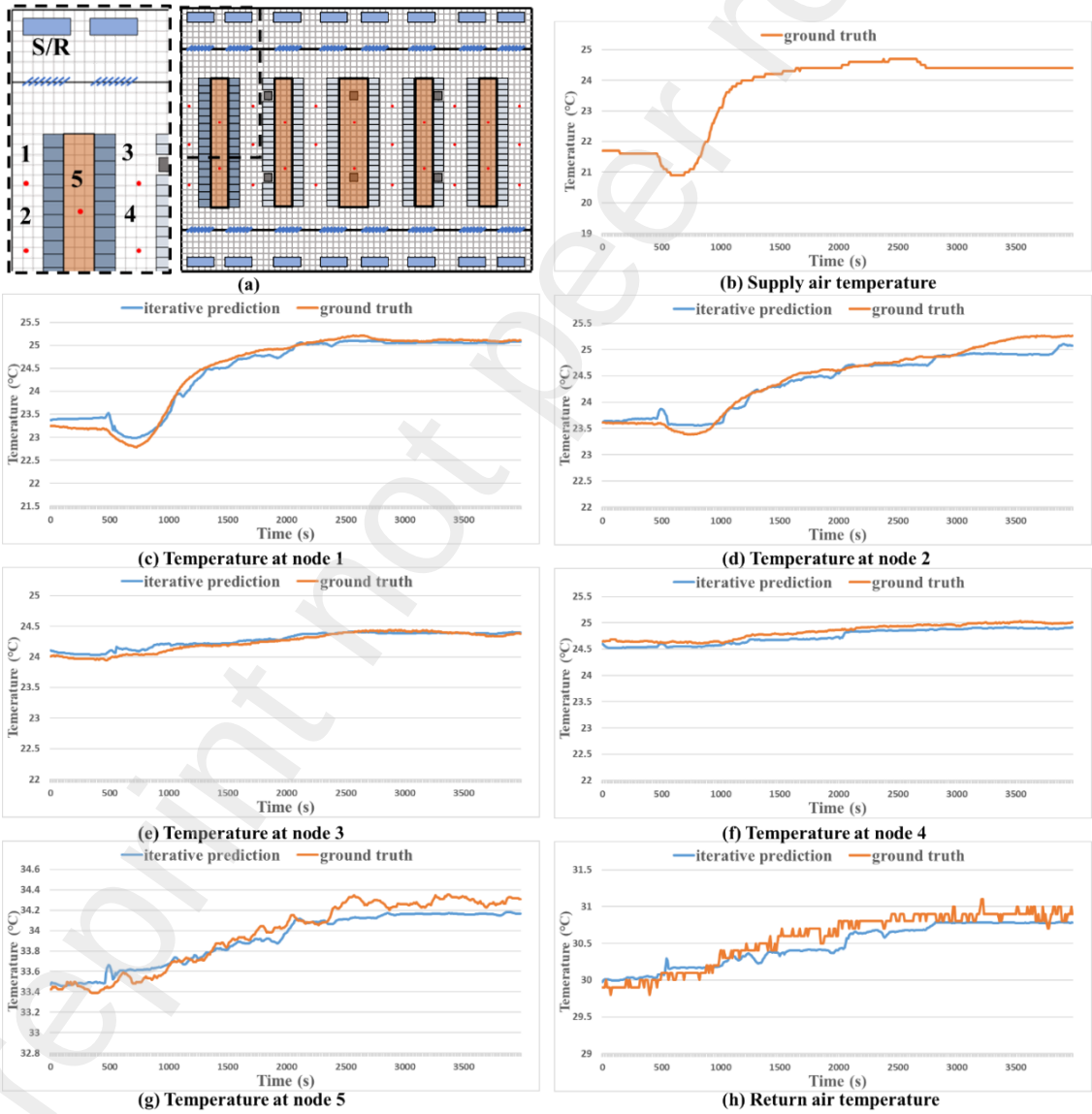


Fig. 8 Temperature prediction curves of selected measurement points in the iterative forecasting scenario.

Preprint not peer reviewed

This preprint research paper has not been peer reviewed. Electronic copy available at: https://ssrn.com/abstract=5292473

### 3.4.2 CV（RMSE）

Iterative forecasting inherently leads to error accumulation at each step, which can impact long-term prediction accuracy. To assess the model's accuracy over different forecasting horizons, we introduce the coefficient of variation of RMSE (CV(RMSE)) as an evaluation metric for each observation point, defined as Equation (21)[38]:

$$CV(RMSE) = \frac{1}{\bar{y}}\sqrt{\frac{\sum_{i=1}^{n}(\hat{y}_i - y_i)^2}{n-p}} \tag{21}$$

where n is the number of observations, p is a degree-of-freedom correction term, which is typically set to $p = 1$ to account for bias in the estimation of RMSE, ensuring a more robust error measurement when the sample size is limited.

Fig. 9 illustrates the distribution of CV(RMSE) for all output points across different forecasting horizons. As the forecasting horizon extends from 600 seconds to 4200 seconds, the CV distribution for most observation points does not exhibit a significant increase, indicating that error accumulation within this time range does not substantially affect prediction accuracy. This suggests that the proposed model is suitable for long-term forecasting applications.

Preprint not peer reviewed

This preprint research paper has not been peer reviewed. Electronic copy available at: https://ssrn.com/abstract=5292473

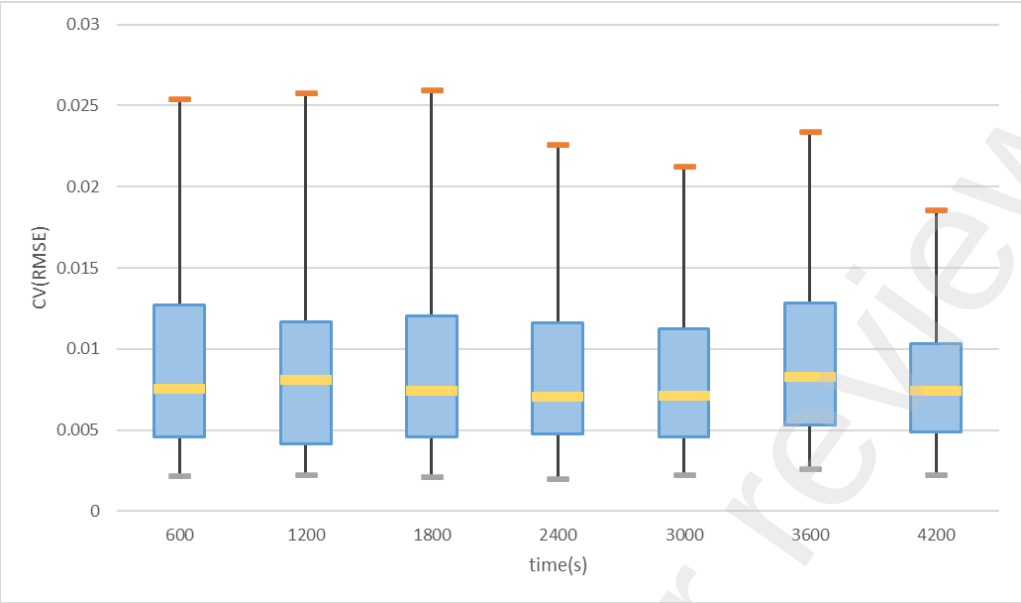


Fig. 9 CV(RMSE) of output temperature at different prediction horizons

Interestingly, the maximum CV(RMSE) value decreases as the forecasting horizon increases. This is primarily due to the dynamic conditions of the test scenario: during the first 2000 seconds, system conditions fluctuate significantly, as shown in Fig. 8 (b), whereas in the later period, the system temperature gradually stabilizes.

### 3.4.3 Steady-State reachability and accuracy

In practical server room operation simulations, it is essential not only for the model to exhibit high accuracy in response to dynamic inputs but also to provide steady-state outputs that are consistent with real-world conditions once the operational state stabilizes. For data-driven models, it is challenging to guarantee that steady-state inputs will result in steady outputs in iterative prediction scenarios, as there is no underlying physical mechanism to ensure this (the steady-state output can be understood as a manifestation of energy conservation). Considering the modeling approach, the model's characteristics, and the specific application requirements,

Preprint not peer reviewed

This preprint research paper has not been peer reviewed. Electronic copy available at: https://ssrn.com/abstract=5292473

this study investigates whether the model's output can reach steady-state conditions under steady-state inputs, thereby reflecting its conservation properties. The test scenario involves selecting a window from the test set as the initial model input, simulating changes from the actual system state, and subsequently using steady-state inputs to assess both the reachability and accuracy of the steady-state output. The average system input over a 15-minute period with minimal fluctuation is utilized, with system output measurements processed similarly. During this period, the point exhibiting the greatest variation in all variables has a standard deviation of 0.0239, calculated using normalized data. An iterative prediction is performed for a simulation duration of 1000 seconds, with steady-state inputs applied throughout. The model output at the 1000-second is evaluated, at which point the model's output is considered steady. The maximum standard deviation of the historical outputs over the previous ten steps at each point is 2.24e-5, calculated using normalized data. The distribution of relative prediction errors is presented in Fig. 10, with an average relative error of 0.8% and a maximum relative error of 2.7%.

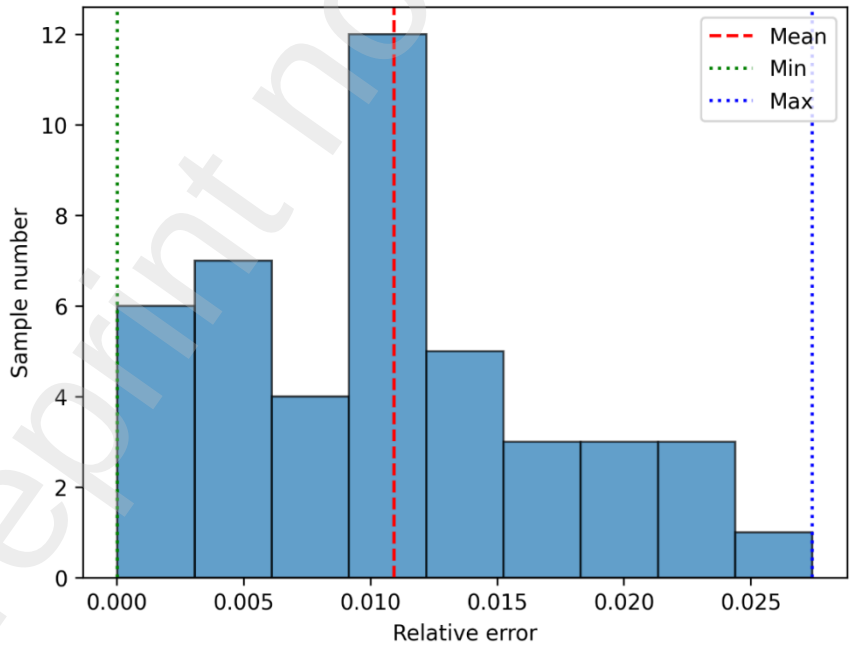


Fig. 10 Distribution of the steady-state error (relative error) of the model

Preprint not peer reviewed

This preprint research paper has not been peer reviewed. Electronic copy available at: https://ssrn.com/abstract=5292473

### 3.4.4 Model time efficiency

The time efficiency of the prediction model is crucial for its application in real-time control scenarios. In such contexts, it is typically required to predict the system state within one sampling cycle, with model inference time often constrained to approximately 10 seconds. The equipment parameters used in this test include an Intel(R) Core(TM) i5-10500 CPU with a clock speed of 3.10 GHz. The inference time per step is approximately 0.007 seconds. For the iterative prediction scenario discussed in Section 3.4.1, which spans 4200 seconds (with a step length of 10 seconds and a total of 420 steps), the total inference time is about 3.1 seconds. In contrast, using traditional CFD methods to simulate the 4200-second system state change would require approximately 5 hours, resulting in a computational time reduction of approximately 10,000 times.

# 4 Discussions and limitations

## 4.1 Complexity of graph construction and the need for automation

In this study, the transition from tabular data to a graph-based representation has been manually structured, requiring the explicit specification of connections between nodes. This manual configuration, while effective for smaller-scale scenarios, presents challenges as the scale of the spaces increases or when the airflow systems become more complex. In such cases, the manual organization of graph structure files can become both time-consuming and prone to human error, particularly when dealing with large-scale buildings or intricate airflow networks.

An alternative approach that could potentially overcome this limitation is the application of

Preprint not peer reviewed

This preprint research paper has not been peer reviewed. Electronic copy available at: https://ssrn.com/abstract=5292473

image processing techniques, such as image recognition and pattern matching [39, 40]. These techniques could be employed to automatically extract the positions and labels of physical entities directly from two-dimensional architectural floor plans. By doing so, the need for manual configuration could be eliminated, allowing for a more scalable and efficient method of graph construction. Furthermore, such an automated process could minimize human error, ensuring greater consistency and accuracy in the graph representations.

However, there are some inherent limitations to this approach. The accuracy of image processing methods is highly dependent on the quality and resolution of the input architectural diagrams. In cases where the floor plans are unclear, incomplete, or have inconsistent labeling, the performance of image recognition systems could be compromised. Additionally, this automated process assumes a predefined and standardized format for the floor plans, which may not always be available in real-world applications. These challenges underscore the need for further research into enhancing the robustness and adaptability of image processing methods in this context.

### 4.2 Model generalization and data requirements

The modeling approach and predictive model proposed in this study are broadly applicable to data centers of various types. However, the effectiveness of these models depends on the availability of high-precision sensor data, which is required for model training. These sensors must be installed within the building and across the air conditioning system to collect detailed environmental data. As the construction, planning, and operational technologies of data centers continue to evolve, it is expected that an increasing volume of high-quality data will become

Preprint not peer reviewed

This preprint research paper has not been peer reviewed. Electronic copy available at: https://ssrn.com/abstract=5292473

available for model training, thereby improving the accuracy and robustness of the predictive models.

For small-scale changes in server rack configurations—such as the closure of certain racks due to equipment failure or the installation of vacant racks as part of business adjustments—the overall airflow pattern within the data center remains largely unaffected. In such cases, the model does not need to be retrained, demonstrating a certain level of generalization. This characteristic allows the model to maintain its predictive performance despite minor adjustments in the physical layout. However, in cases where there are significant changes in rack configurations, such as an entire row of racks being brought online from a previously idle state, retraining of the model may be necessary. These more substantial changes could disrupt the airflow distribution patterns and thus necessitate updates to the model to account for the new configuration.

This observation highlights an important consideration for the deployment of such models in real-world settings. While the model is flexible enough to handle minor variations without retraining, it still relies on periodic retraining when major physical changes occur within the data center. As the frequency and scale of these changes can vary, future work should explore methods for dynamic retraining or fine-tuning that can be triggered by significant changes in the physical environment. This would further enhance the adaptability of the model and ensure its long-term effectiveness in diverse operational contexts.

## 5 Conclusions

The major conclusion of this study are as follow:

1. A novel spatio-temporal heterogeneous graph-based approach for modeling and rapid prediction of indoor thermal environments in data centers was proposed . The method

Preprint not peer reviewed

This preprint research paper has not been peer reviewed. Electronic copy available at: https://ssrn.com/abstract=5292473

provides a fast and accurate simulation foundation to support real-time control and energy optimization strategies. In the proposed approach, the temperatures measured by various sensors within a server room are encoded as node features, while the operating conditions of equipment are incorporated as edge features. Compared with conventional modeling approaches, this study introduces a spatio-temporal heterogeneous graph structure to represent both spatial and temporal dependencies between equipment operating conditions and indoor temperature distributions. By allowing for heterogeneous edge types, the model better captures the diverse heat transfer characteristics across different zones of the data center.

2. A specialized prediction model, ST-HEGAT, was developed to rapidly forecast the temperature field within a server room. To evaluate the modeling approach and predictive performance, a real-world dataset from an operational data center in Shanghai, China, was used for training and validation. A comprehensive hyperparameter optimization using Bayesian Optimization was conducted across four graph configurations. The optimal model configuration was achieved when the influence distance threshold of each node was set to 12 meters, and each edge incorporated the fan speed rates of the six nearest CRAH units and the power consumption of twelve adjacent racks. This configuration yielded the best performance with an RMSE of 0.187 ± 0.098 °C.
3. The proposed approach exhibits high accuracy, strong steady-state reachability, and efficient computational performance. The ST-HEGAT model effectively captured both local temperature variations and global thermal trends. For long-horizon predictions (up to 4200 s), the coefficient of variation of RMSE (CV(RMSE)) at the most challenging point remained as low as 0.019, enabling reliable simulation over extended periods. Under steady-state input conditions, the model output converged to steady-state results with a maximum relative error of 2.7% and an average error of 0.8%. Notably, the prediction speed of the proposed method is four orders of magnitude faster than traditional CFD simulations, completing a 4200 s prediction in just 3.1 s.

By integrating a wide range of equipment parameters into a unified spatio-temporal heterogeneous graph representation, the proposed approach offers strong adaptability and potential for deployment in real-world intelligent data centers. The method is inherently

Preprint not peer reviewed

This preprint research paper has not been peer reviewed. Electronic copy available at: https://ssrn.com/abstract=5292473

applicable to data centers with similar topologies due to its structural generalizability. Its high predictive accuracy and efficiency provide robust support for real-time control and optimization algorithms, enabling accurate and responsive forecasting of indoor thermal environments following operational adjustments, and laying a practical foundation for energy-efficient cooling strategies in modern data centers.

**ACKNOWLEDGMENTS**

This study was supported by following funds and program: International Exchange Cooperation Project of NSFC-STINT ( Energy Management of Fuel Cell Powered Data Centers) (51911530157), the Fund of Xi'an Science and Technology Bureau (20192187 14SYS002CG024), the Foundation for Innovative Research Groups of the National Natural Science Foundation of China (No.51721004) and the Alibaba Cloud IDC (Internet Data Center) Research and Development Program.

## References

[1] Muhammad S, Pan Y, Magazzino C, Luo Y, Waqas M. The fourth industrial revolution and environmental efficiency: The role of fintech industry. J Clean Prod. 2022;381:135196.

[2] Zhao R, Du Y, Yang X, Zhou Z, Wang W, Yang X. A critical review on the thermal management of data center for local hotspot elimination. Energy Build. 2023;297:113486.

[3] Habibi Khalaj A, Halgamuge SK. A review on efficient thermal management of air- and liquid-cooled data centers: From chip to the cooling system. Appl Energy. 2017;205:1165-1188.

[4] Zhang Q, Meng Z, Hong X, Zhan Y, Liu J, Dong J, et al. A survey on data center cooling systems: Technology, power consumption modeling and control strategy optimization. J Syst Archit. 2021;119:102253.

[5] Li Y, Wen Y, Tao D, Guan K. Transforming cooling optimization for green data center via deep reinforcement learning. IEEE Trans Cybern. 2020;50:2002-2013.

[6] Anka SK, Lamptey NB, Choi JM. Comparative analysis and optimization of the annual performance for a novel internet data center cooling system. J Build Eng. 2023;67:106064.

[7] He W, Zhang J, Li H, Liu S, Wang Y, Lv B, et al. Optimal thermal management of server cooling system based cooling tower under different ambient temperatures. Appl Therm Eng.

Preprint not peer reviewed

This preprint research paper has not been peer reviewed. Electronic copy available at: https://ssrn.com/abstract=5292473

2022;207:118176.

[8] Zhu J, Yang S, Yu L, Jia H. Modeling and variable temperature control for instant consumption of renewable energy in data center cooling systems. Autom Electr Power Syst. 2022;46:13-22.

[9] Liu W, Lian S, Fang X, Shang Z, Wu H, Zhu H, et al. An open-source and experimentally guided CFD strategy for predicting air distribution in data centers with air-cooling. Build Environ. 2023;242:110542.

[10] Ahmadi VE, Erden HS. A parametric CFD study of computer room air handling bypass in air-cooled data centers. Appl Therm Eng. 2020;166:114685.

[11] Karki K, Patankar S, Radmehr A. CFD modeling of data centers. In: Runchal A, editor. 50 Years of CFD in Engineering Sciences: A Commemorative Volume in Memory of D Brian Spalding. Singapore: Springer Singapore; 2020. p. 647-687.

[12] Meng X, Zhou J, Zhang X, Luo Z, Gong H, Gan T. Optimization of the thermal environment of a small-scale data center in China. Energy. 2020;196:117080.

[13] Gong X, Zhang Z, Gan S, Niu B, Yang L, Xu H, et al. A review on evaluation metrics of thermal performance in data centers. Build Environ. 2020;177:106907.

[14] Fang Z, Crimier N, Scanu L, Midelet A, Alyafi A, Delinchant B. Multi-zone indoor temperature prediction with LSTM-based sequence to sequence model. Energy Build. 2021;245:111053.

[15] Wang Y, Zhang Y, Nörtershäuser D, Le Masson S, Menaud J-M. Model and data driven transient thermal system modelings for contained data centers. Energy Build. 2022;258:111790.

[16] Tabrizchi H, Razmara J, Mosavi A. Thermal prediction for energy management of clouds using a hybrid model based on CNN and stacking multi-layer bi-directional LSTM. Energy Rep. 2023;9:2253-2268.

[17] Fang L, Xu Q, Li S, Xia Y, Chen Q. Temperature prediction in data center combining with deep neural network. Appl Therm Eng. 2024;244:122571.

[18] Zhang J, Xiao F, Li A, Ma T, Xu K, Zhang H, et al. Graph neural network-based spatio-temporal indoor environment prediction and optimal control for central air-conditioning systems. Build Environ. 2023;242:110600.

[19] Hu Z, Gao Y, Sun L, Mae M, Imaizumi T. Self-learning dynamic graph neural network with self-attention based on historical data and future data for multi-task multivariate residential air conditioning forecasting. Appl Energy. 2024;364:123156.

Preprint not peer reviewed

This preprint research paper has not been peer reviewed. Electronic copy available at: https://ssrn.com/abstract=5292473

[20] Jia Y, Wang J, Reza Hosseini M, Shou W, Wu P, Mao C. Temporal graph attention network for building thermal load prediction. Energy Build. 2024;321:113507.

[21] Li A, Zhang J, Xiao F, Fan C, Yu Y, Chen Z. Design information-assisted graph neural network for modeling central air conditioning systems. Adv Eng Inform. 2024;60:102379.

[22] Wang X, Wang X, Yin X, Li K, Wang L, Wang R, et al. Distributed LSTM-GCN-based spatial–temporal indoor temperature prediction in multizone buildings. IEEE Trans Ind Inform. 2024;20:482-491.

[23] Yang Z, Gaidhane AD, Drgoňa J, Chandan V, Halappanavar MM, Liu F, et al. Physics-constrained graph modeling for building thermal dynamics. Energy AI. 2024;16:100346.

[24] Zou M, Huang W, Jin J, Hu B, Liu Z. Deep spatio-temporal feature fusion learning for multi-step building cooling load forecasting. Energy Build. 2024;322:114735.

[25] Liu Y, Wu J, Xu Z, Shen Y, Guan X. A hybrid mechanism-based and data-driven model for efficient indoor temperature distribution prediction with transfer learning. Energy Build. 2025;326:115023.

[26] Li W, Yang L, Ji Y, Xu P. Estimating demand response potential under coupled thermal inertia of building and air-conditioning system. Energy Build. 2019;182:19-29.

[27] Bondy JA, Murty USR. Graph theory. New York, NY: Springer Publishing Company; 2008.

[28] Chen W-K. Applied graph theory. Amsterdam, Netherlands: Elsevier; 2012.

[29] Wu Z, Pan S, Chen F, Long G, Zhang C, Yu PS. A comprehensive survey on graph neural networks. IEEE Trans Neural Netw Learn Syst. 2021;32:4-24.

[30] Li Z, Liu F, Yang W, Peng S, Zhou J. A survey of convolutional neural networks: Analysis, applications, and prospects. IEEE Trans Neural Netw Learn Syst. 2022;33:6999-7019.

[31] Kipf TN, Welling M. Semi-supervised classification with graph convolutional networks. arXiv preprint arXiv:1609.02907. 2016.

[32] Mo X, Xing Y, Lv C. Heterogeneous edge-enhanced graph attention network for multi-agent trajectory prediction. arXiv preprint arXiv:2106.07161. 2021.

[33] Veličković P, Cucurull G, Casanova A, Romero A, Liò P, Bengio Y. Graph attention networks. arXiv preprint arXiv:1710.10903. 2017.

[34] Medsker L, Jain LC. Recurrent neural networks: Design and applications. Boca Raton, FL:

Preprint not peer reviewed

This preprint research paper has not been peer reviewed. Electronic copy available at: https://ssrn.com/abstract=5292473

CRC Press; 1999.

[35] Hochreiter S, Schmidhuber J. Long short-term memory. Neural Comput. 1997;9:1735-1780.

[36] Sak H, Senior A, Beaufays F. Long short-term memory based recurrent neural network architectures for large vocabulary speech recognition. arXiv preprint arXiv:1402.128. 2014.

[37] Fey M, Lenssen JE. Fast graph representation learning with PyTorch Geometric. arXiv preprint arXiv:1903.02428. 2019.

[38] Ruiz GR, Bandera CF. Validation of calibrated energy models: Common errors. Energies. 2017;10:1587.

[39] Yeo C, Kim BC, Cheon S, Lee J, Mun D. Machining feature recognition based on deep neural networks to support tight integration with 3D CAD systems. Sci Rep. 2021;11:22147.

[40] Lu Q, Chen L, Li S, Pitt M. Semi-automatic geometric digital twinning for existing buildings based on images and CAD drawings. Autom Constr. 2020;115:103183.

Preprint not peer reviewed

This preprint research paper has not been peer reviewed. Electronic copy available at: https://ssrn.com/abstract=5292473