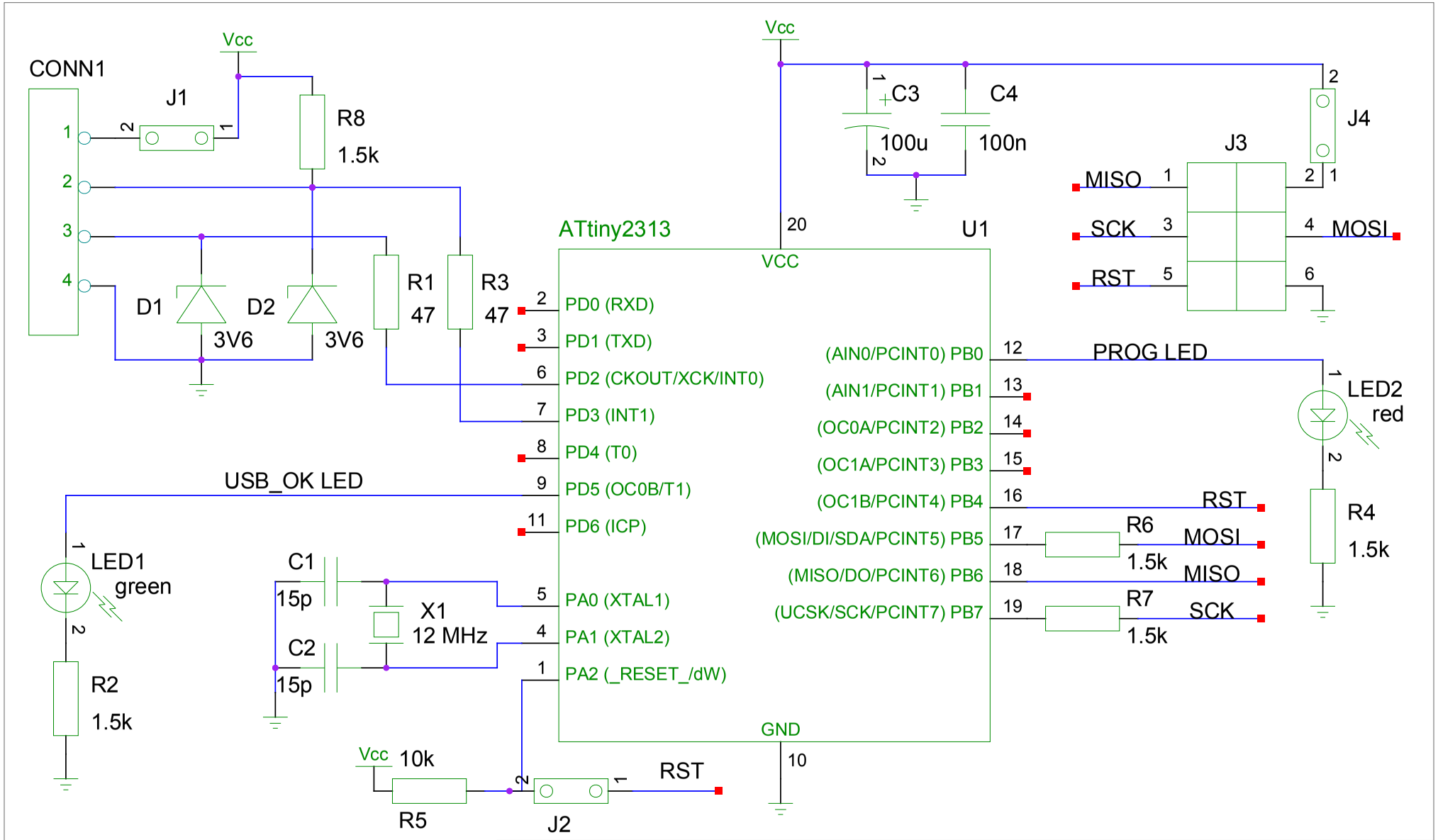

USBtinyISP v1, slightly modified

CC 2.5 By-SA

TITLE m0n5t3r tinyISP - based on https://learn.adafruit.com/usbtinyisp/

FILE: usbtinyisp.sch

REVISION: 2

PAGE 1 OF 1

DRAWN BY: Sabin Iacob (m0n5t3r)