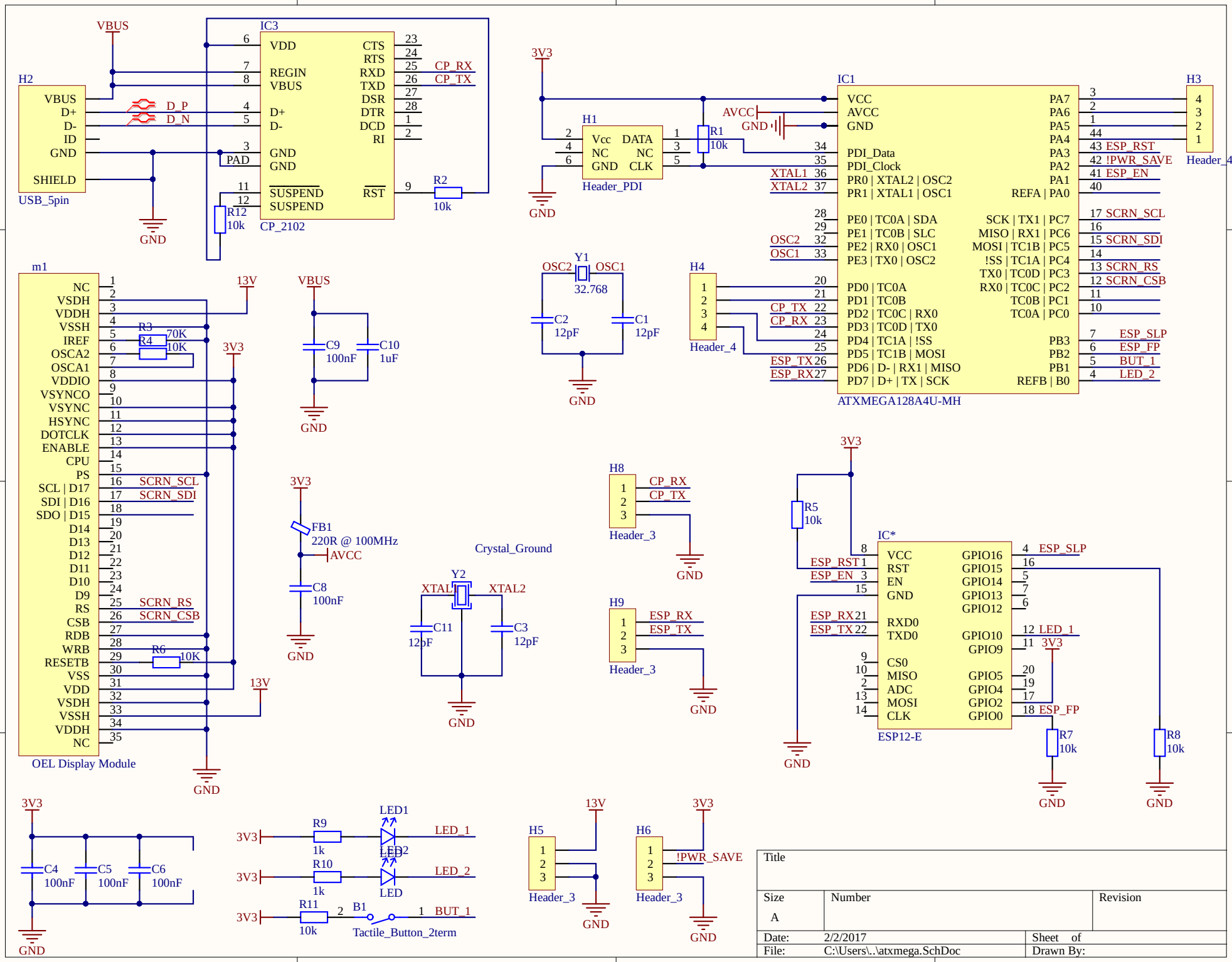
VBUS
H2
VBUS
D+
D-
ID
GND
SHIELD
USB_5pin
D_P
D_N
IC3
VDD
REGIN
VBUS
D+
D-
GND
GND
SUSPEND
SUSPEND
CTS
RTS
RXD
TXD
DSR
DTR
DCD
RI
RST
CP_RX
CP_TX
R2
10k
R12
10k
CP_2102
3V3
H1
Vcc
NC
GND
DATA
NC
CLK
Header_PDI
R1
10k
AVCC
GND
IC1
VCC
AVCC
GND
PDI_Data
PDI_Clock
PR0 | XTAL2 | OSC2
PR1 | XTAL1 | OSC1
PE0 | TC0A | SDA
PE1 | TC0B | SLC
PE2 | RX0 | OSC1
PE3 | TX0 | OSC2
PD0 | TC0A
PD1 | TC0B
PD2 | TC0C | RX0
PD3 | TC0D | TX0
PD4 | TC1A | !SS
PD5 | TC1B | MOSI
PD6 | D- | RX1 | MISO
PD7 | D+ | TX | SCK
PA7
PA6
PA5
PA4
PA3
PA2
PA1
REFA | PA0
SCK | TX1 | PC7
MISO | RX1 | PC6
MOSI | TC1B | PC5
!SS | TC1A | PC4
TX0 | TC0D | PC3
RX0 | TC0C | PC2
TC0B | PC1
TC0A | PC0
PB3
PB2
PB1
REFB | B0
ESP_RST
!PWR_SAVE
ESP_EN
SCRN_SCL
SCRN_SDI
SCRN_RS
SCRN_CSB
ESP_SLP
ESP_FP
BUT_1
LED_2
XTAL1
XTAL2
OSC2
OSC1
CP_TX
CP_RX
ESP_TX
ESP_RX
ATXMEGA128A4U-MH
H3
Header_4
Y1
32.768
C2
12pF
C1
12pF
H4
Header_4
m1
NC
VSDH
VDDH
VSSH
IREF
OSCA2
OSCA1
VDDIO
VSYNCO
VSYNC
HSYNC
DOTCLK
ENABLE
CPU
PS
SCL | D17
SDI | D16
SDO | D15
D14
D13
D12
D11
D10
D9
RS
CSB
RDB
WRB
RESETB
VSS
VDD
VSDH
VSSH
VDDH
NC
R3
70K
R4
10K
R6
10K
13V
3V3
OEL Display Module
VBUS
C9
100nF
C10
1uF
FB1
220R @ 100MHz
AVCC
C8
100nF
Crystal_Ground
Y2
XTAL1
XTAL2
C11
12pF
C3
12pF
H8
Header_3
H9
Header_3
R5
10k
IC*
VCC
RST
EN
GND
RXD0
TXD0
CS0
MISO
ADC
MOSI
CLK
GPIO16
GPIO15
GPIO14
GPIO13
GPIO12
GPIO10
GPIO9
GPIO5
GPIO4
GPIO2
GPIO0
ESP_RST
ESP_EN
ESP_RX
ESP_TX
ESP_SLP
LED_1
ESP_FP
ESP12-E
R7
10k
R8
10k
C4
100nF
C5
100nF
C6
100nF
R9
1k
R10
1k
R11
10k
LED1
LED2
LED
LED_1
LED_2
B1
Tactile_Button_2term
BUT_1
H5
Header_3
13V
H6
Header_3
!PWR_SAVE
Title
Size
A
Number
Revision
Date: 2/2/2017
Sheet of
File: C:\Users\..\atxmega.SchDoc
Drawn By: