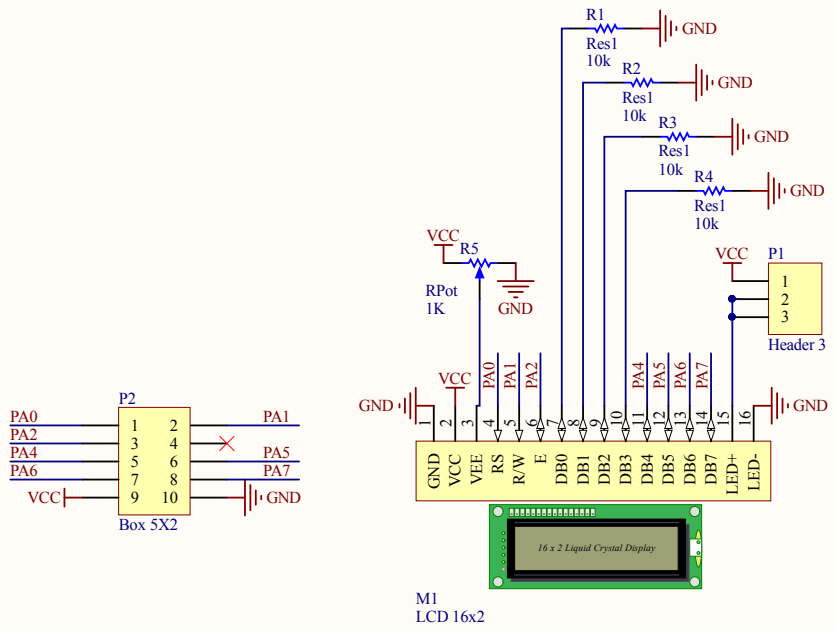

Title		
Size A4	Number	Revision
Date: 2017/07/31		Sheet of
File: E:\PROJECTS\..\atWork_LCD.SchDoc		Drawn By:

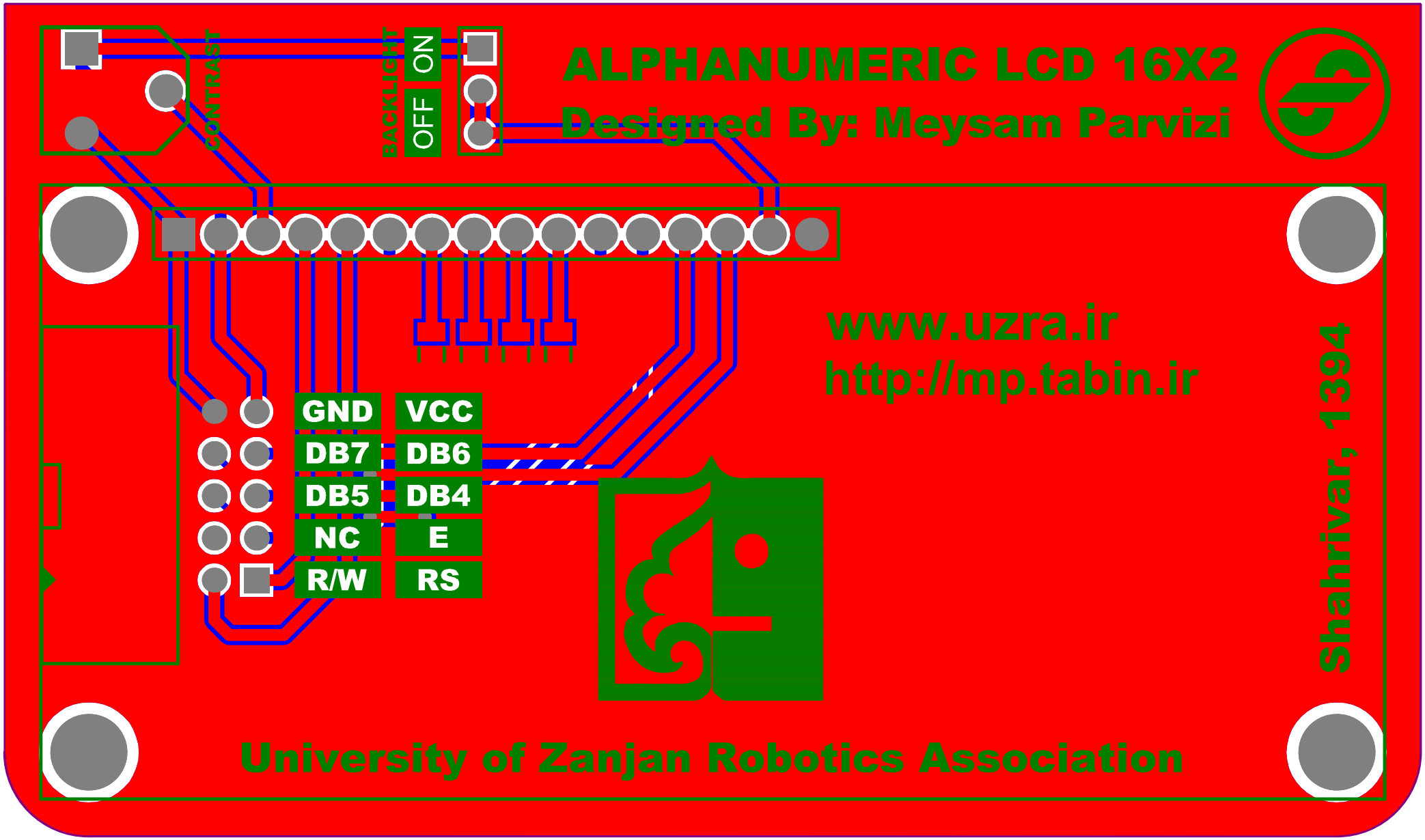
ALPHANUMERIC LCD 16X2
Designed By: Meysam Parvizi
CONTRAST
BACKLIGHT
ON
OFF
GND
VCC
DB7
DB6
DB5
DB4
NC
E
R/W
RS
www.uzra.ir
http://mp.tabin.ir
Shahrivar, 1394
University of Zanjan Robotics Association