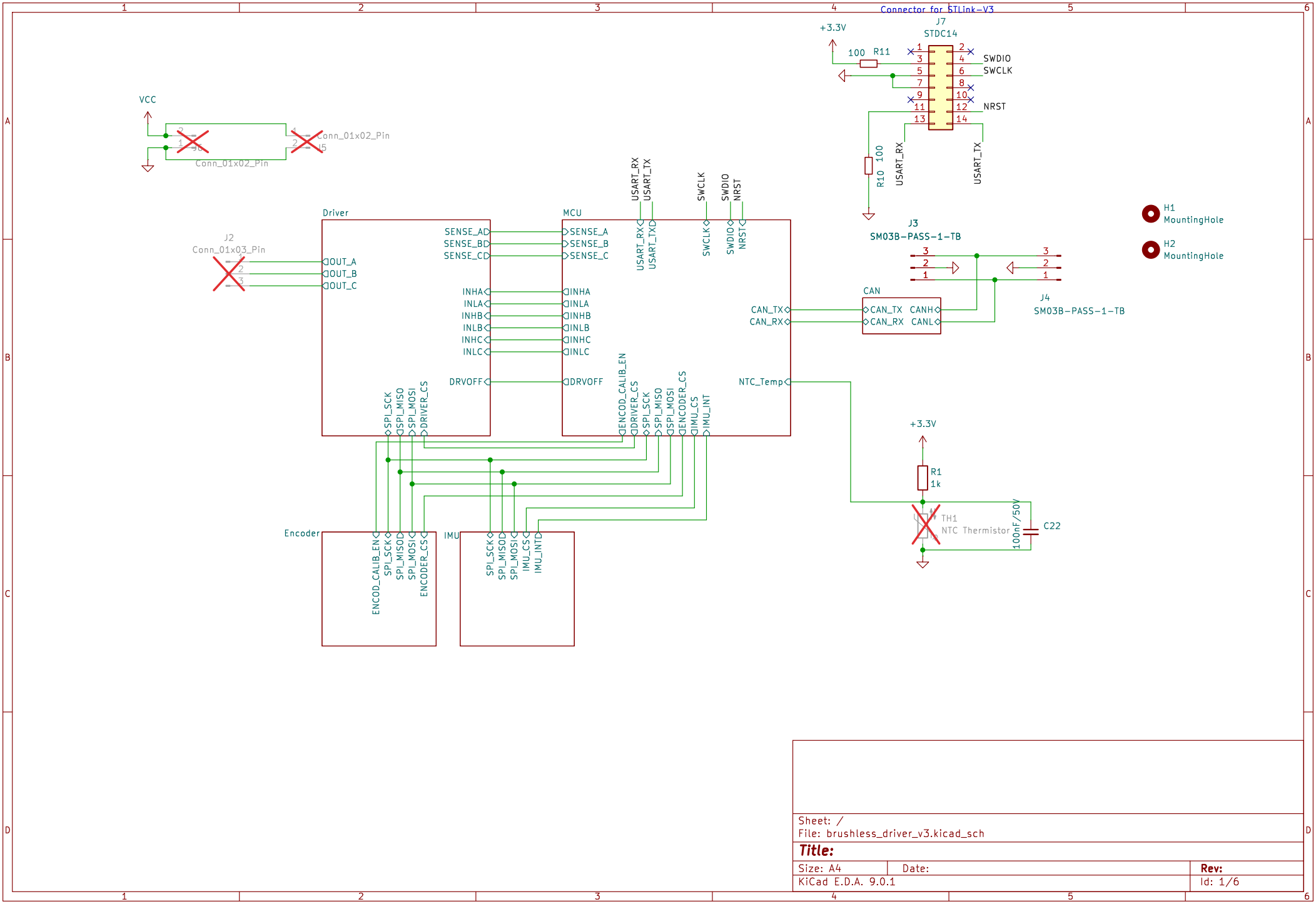

Sheet: /
File: brushless_driver_v3.kicad_sch

Title:

Size: A4	Date:	Rev:
KiCad E.D.A. 9.0.1		Id: 1/6

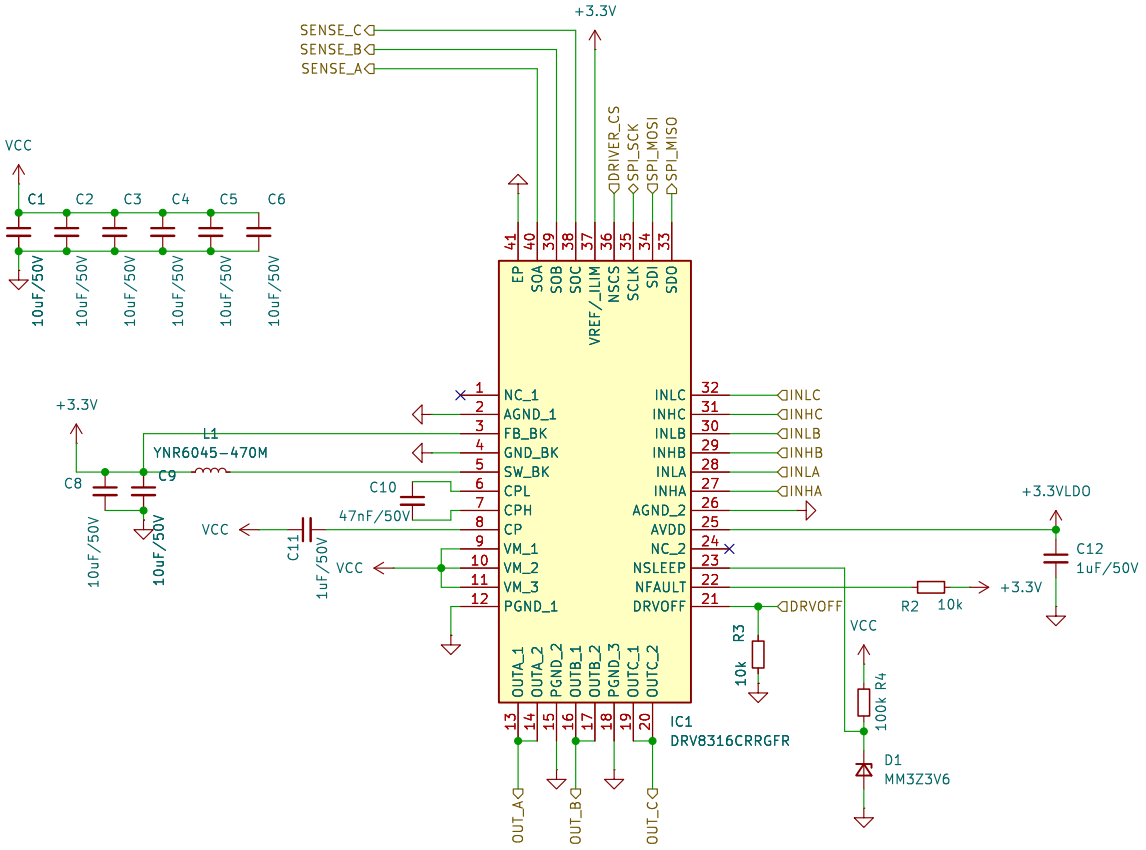

Sheet: /Driver/
File: bldc_driver.kicad_sch

Title:

Size: A4	Date:	Rev:
KiCad E.D.A. 9.0.1		Id: 2/6

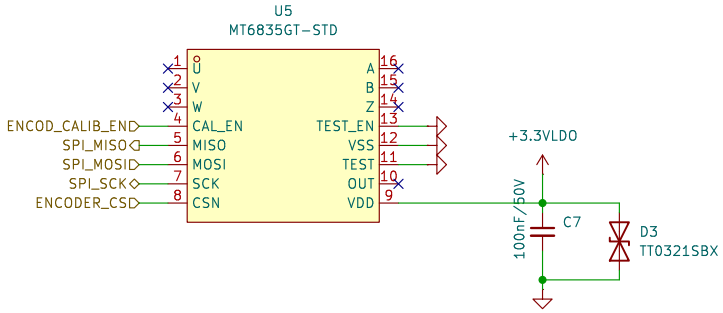

Sheet: /Encoder/
File: mag_encoder.kicad_sch

Title:

Size: A4	Date:	**Rev:**
KiCad E.D.A. 9.0.1		Id: 3/6

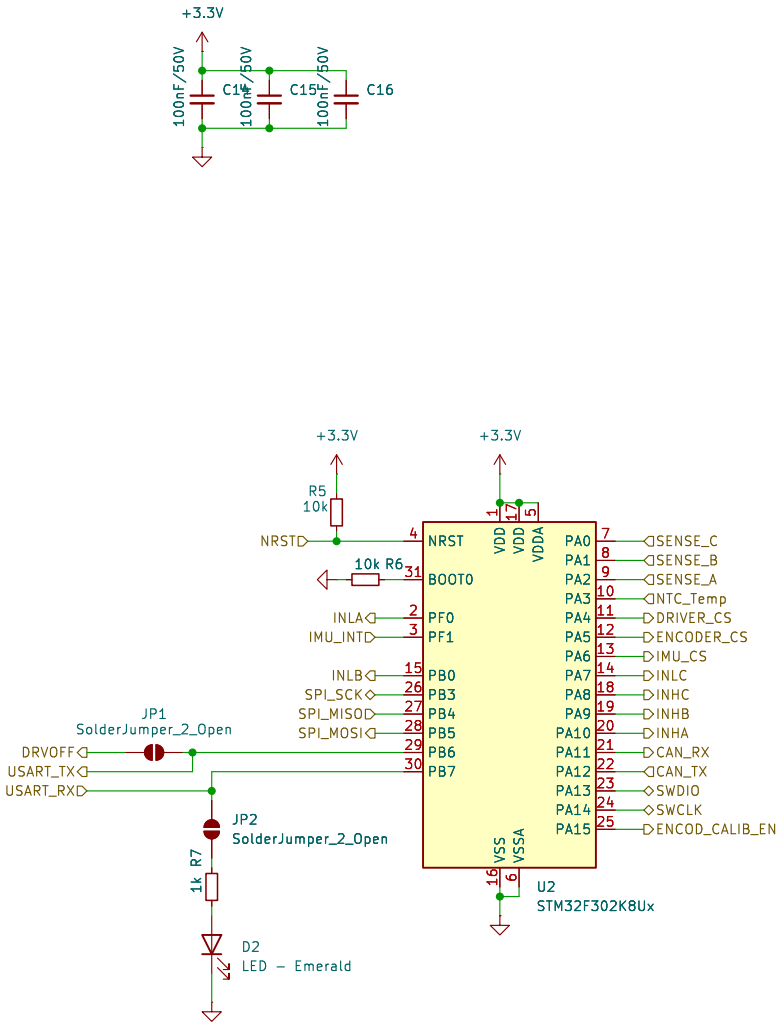

Sheet: /MCU/
File: mcu.kicad_sch

Title:

Size: A4	Date:	**Rev:**
KiCad E.D.A. 9.0.1		Id: 4/6

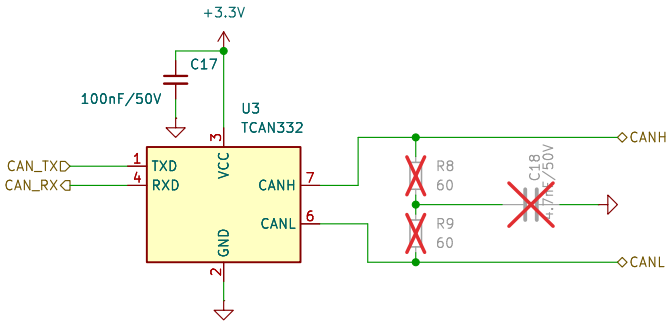

Sheet: /CAN/
File: can.kicad_sch

Title:

Size: A4	Date:	**Rev:**
KiCad E.D.A. 9.0.1		Id: 5/6

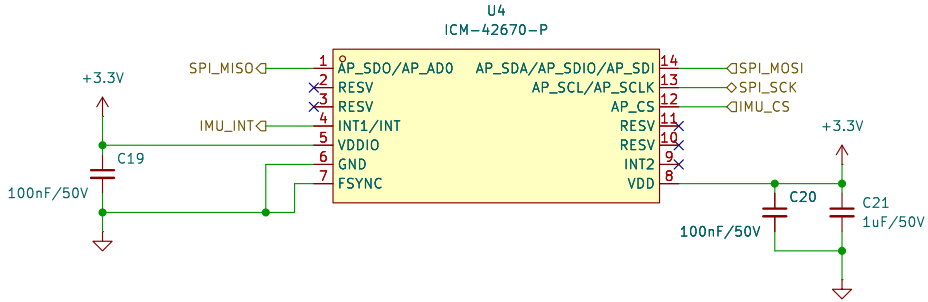

Sheet: /IMU/
File: imu.kicad_sch

Title:

Size: A4	Date:	**Rev:**
KiCad E.D.A. 9.0.1		Id: 6/6