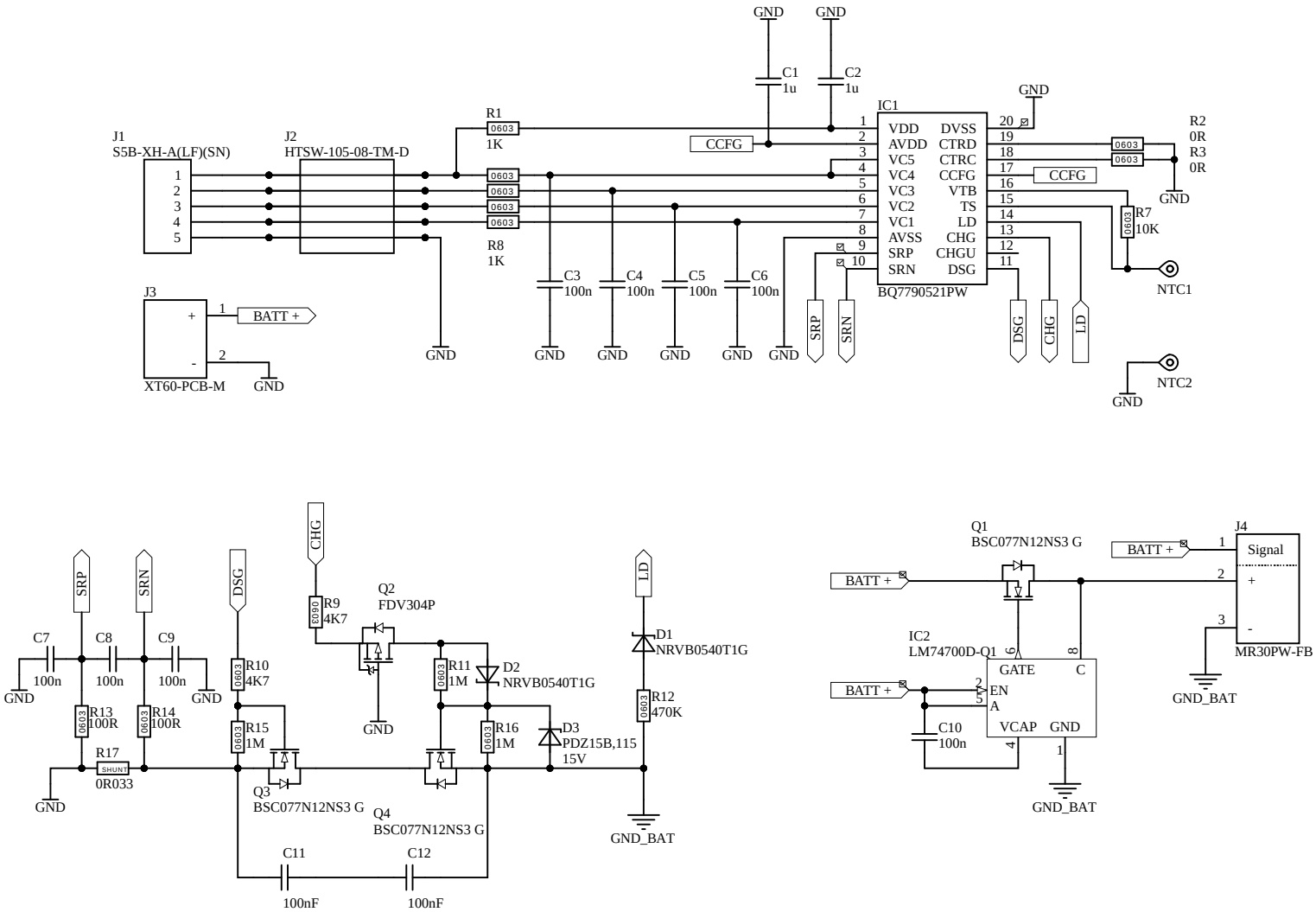

Title		
Size A4	Number	Revision
Date: 12/28/2024		Sheet of
File: C:\Projekty\..\Schematic.SchDoc		Drawn By: