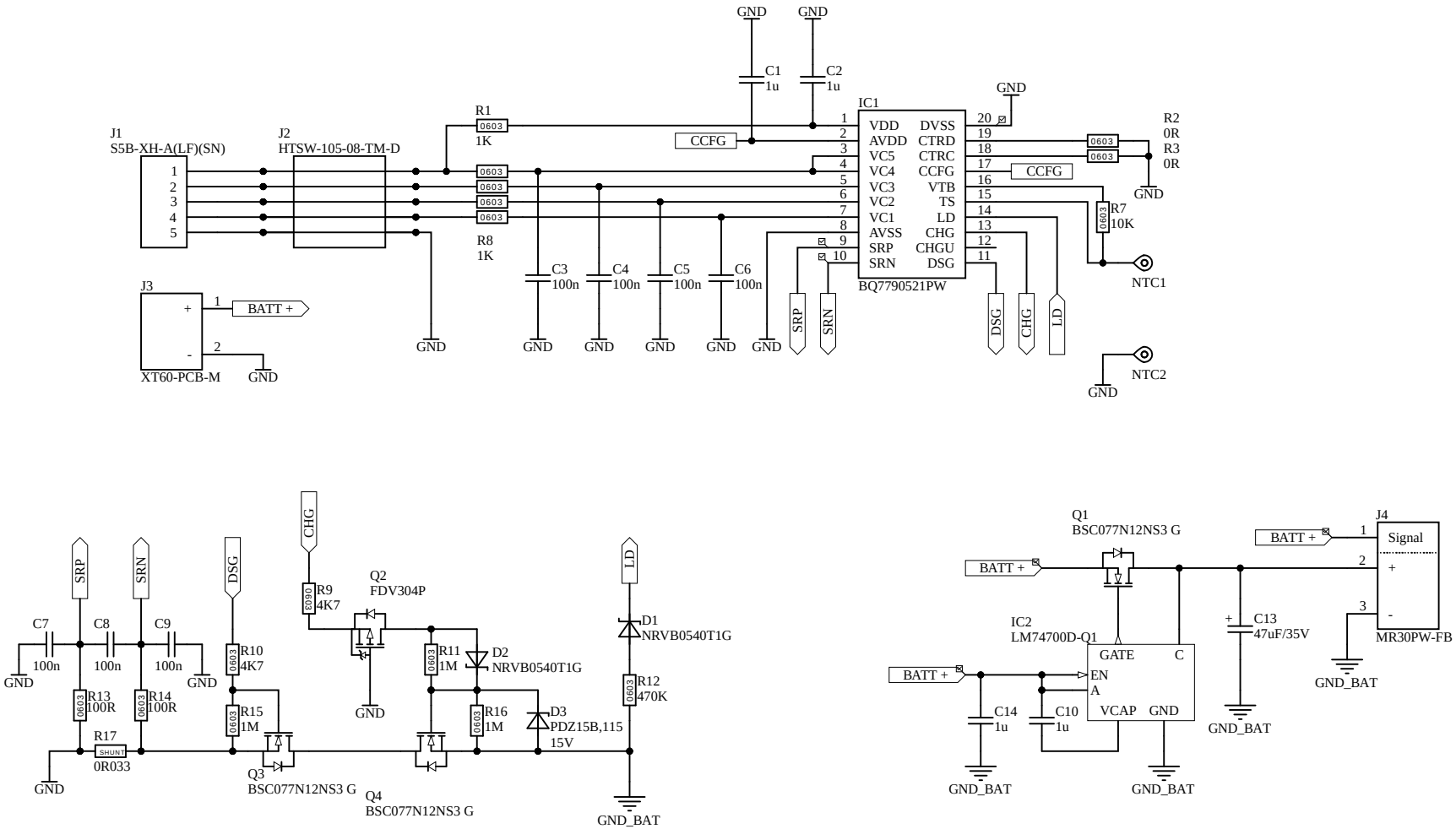

Title		
Size A4	Number	Revision
Date: 1/01/2025		Sheet of
File: C:\Projekty\BMS\Schematic.SchDoc		Drawn By: