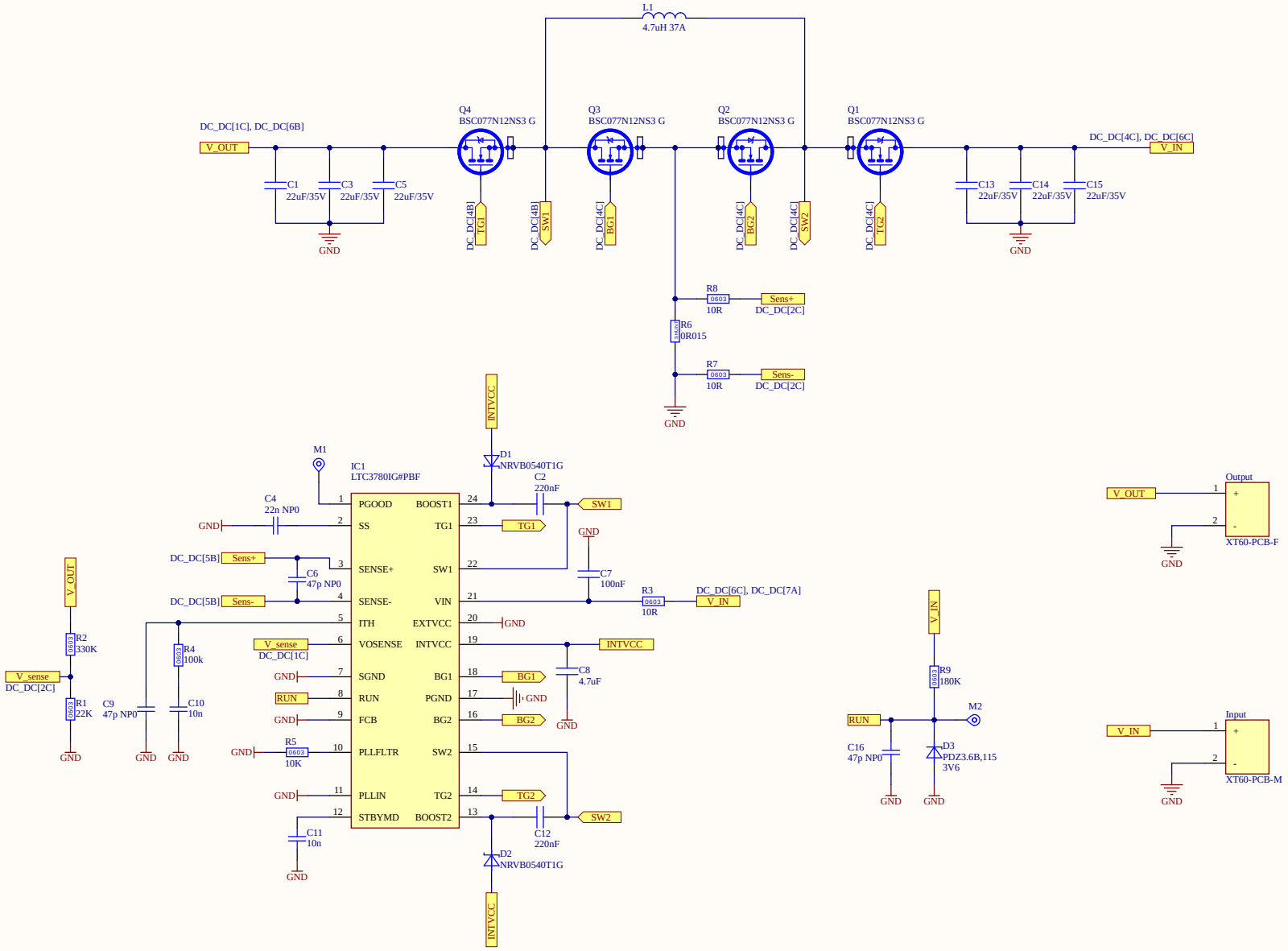

Title		
Size A3	Number	Revision
Date: 8/27/2022		Sheet of
File: D:\Projekty\..\DC_DC.SchDoc		Drawn By: