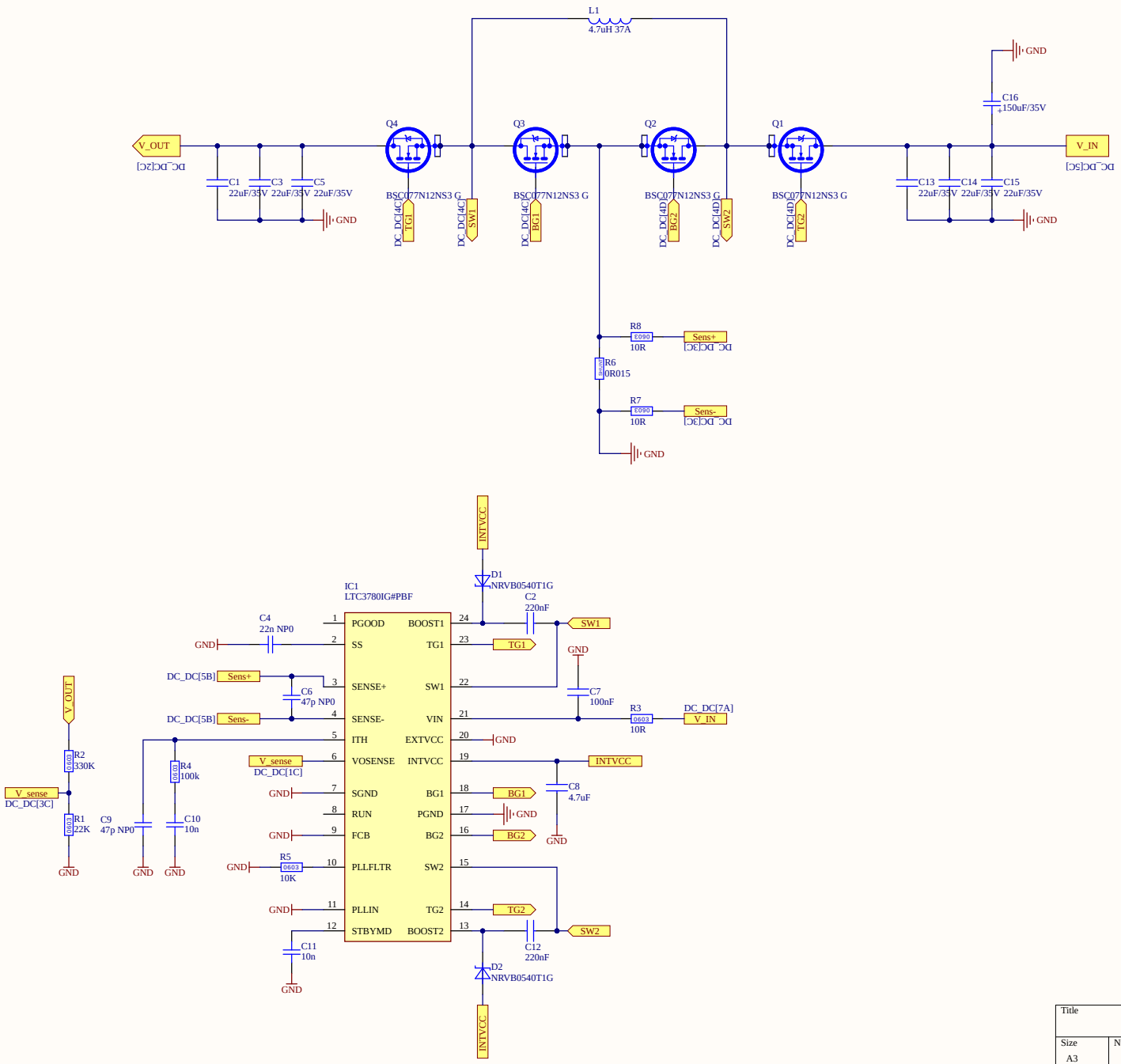

Title		
Size A3	Number	Revision
Date: 8/25/2022		Sheet of
File: D:\Projekty\..\DC_DC.SchDoc		Drawn By:

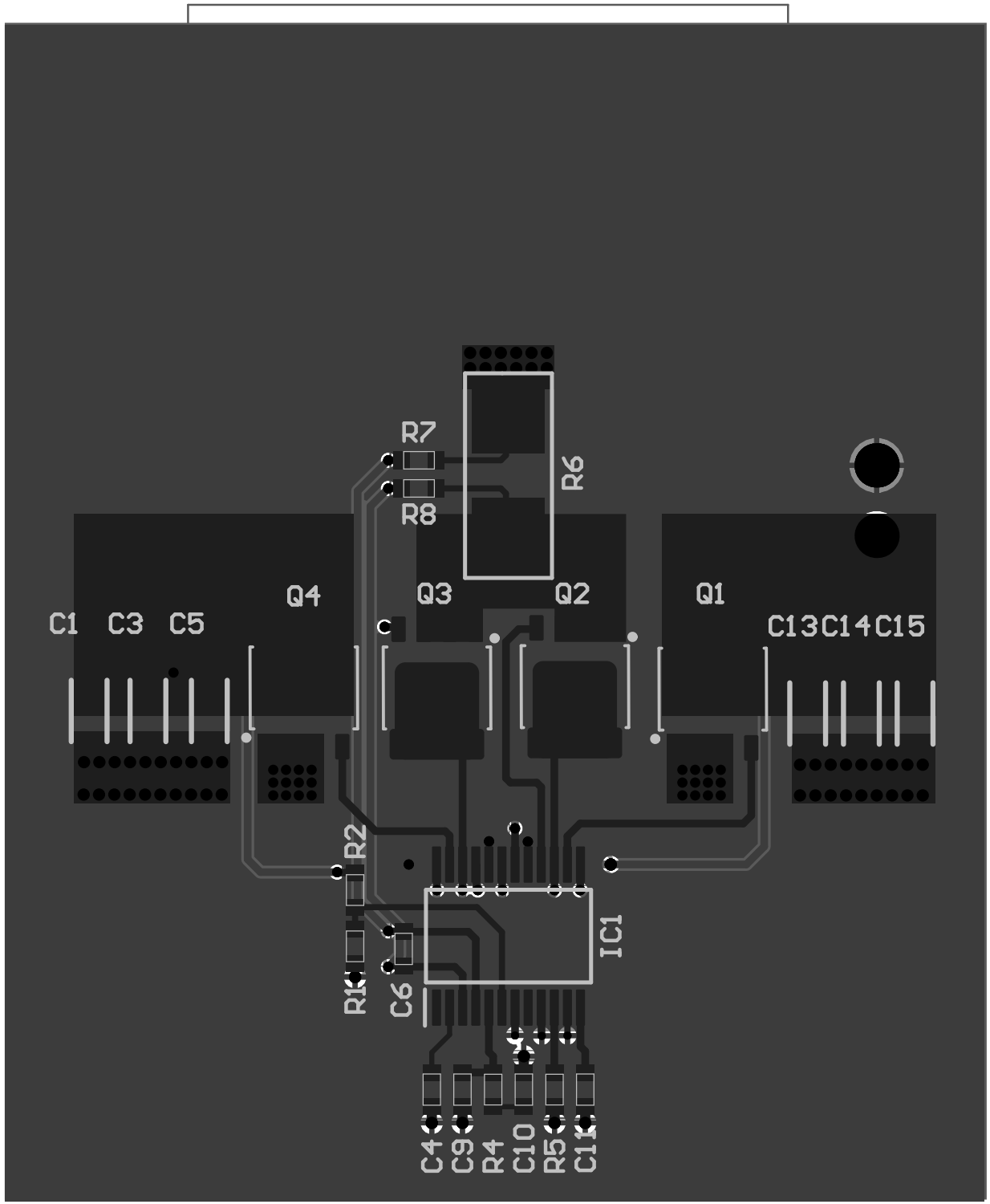
R7
R8
R6
Q4
Q3
Q2
Q1
C1
C3
C5
C13
C14
C15
R2
R1
C6
IC1
C4
C9
R4
C10
R5
C11