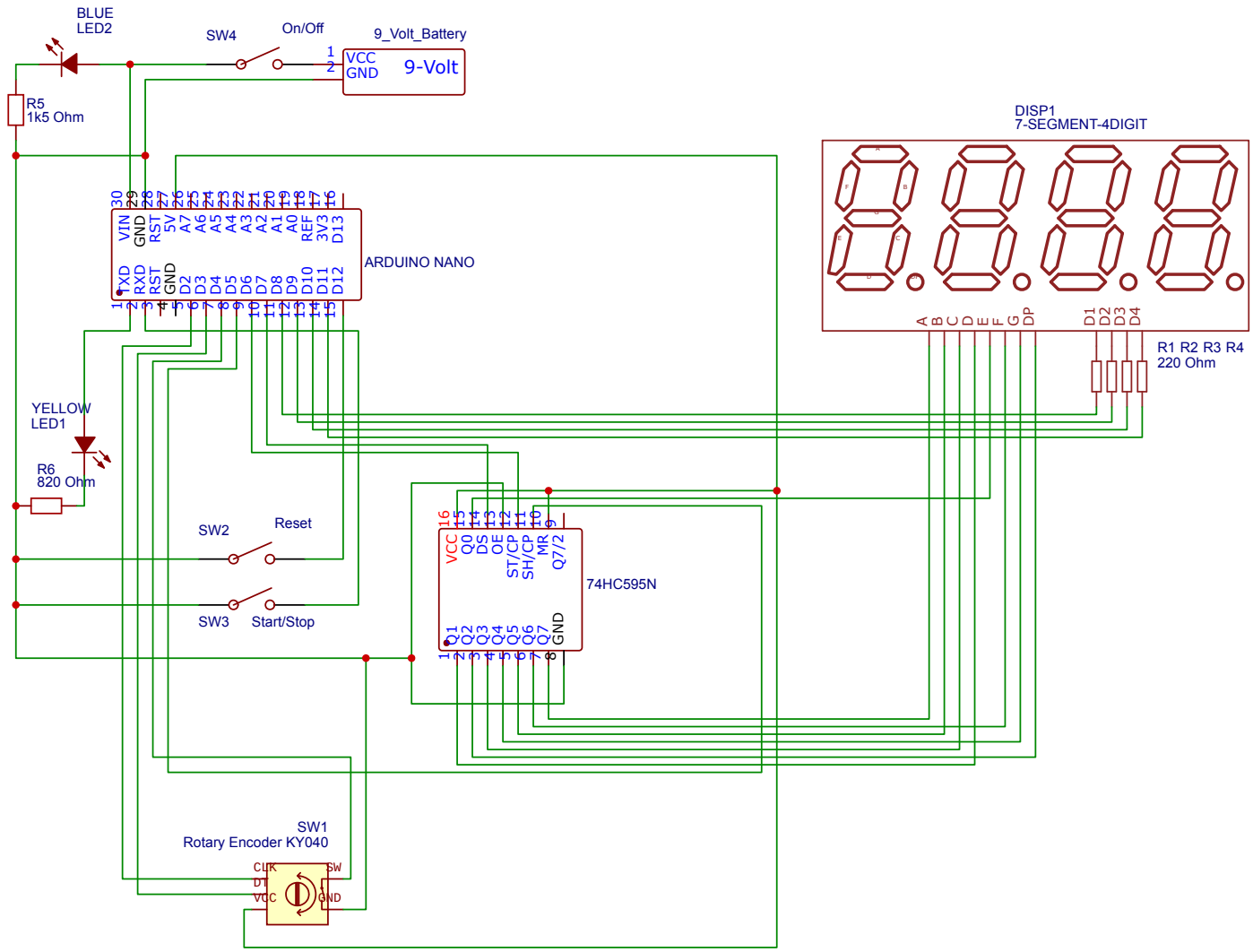

TITLE: Meeting Meter	REV: RC5
EasyEDA https://github.com/oudesnepelaar/meeting-meter	Sheet: 1/1
Date: 2019-12-18 Drawn By: Ferrie J Bank	