ARM MPU AM335X General Purpose EVM
Base Board
ZCZ Package

-See the Hardware User Guide for board details
-See the PCB Build Specification for PCB Details
-See the EVM Errata Document for Known Issues

PCB1

AM335x 15x15 Base Board Bare PCB

ARM MPU

Texas Instruments, Inc.
ARM MPU Business Unit
12500 TI Blvd
Dallas, TX 75243

TEXAS INSTRUMENTS

Final

AM335X General Purpose EVM ZCZ Baseboard

Title Page

Size	Document Number	Modified By:	Rev
C	am335x_gpevm_zczbaseboard.dsn	Damon Domke	1.5B

Date: Friday, June 07, 2013 Sheet: 1 of 16

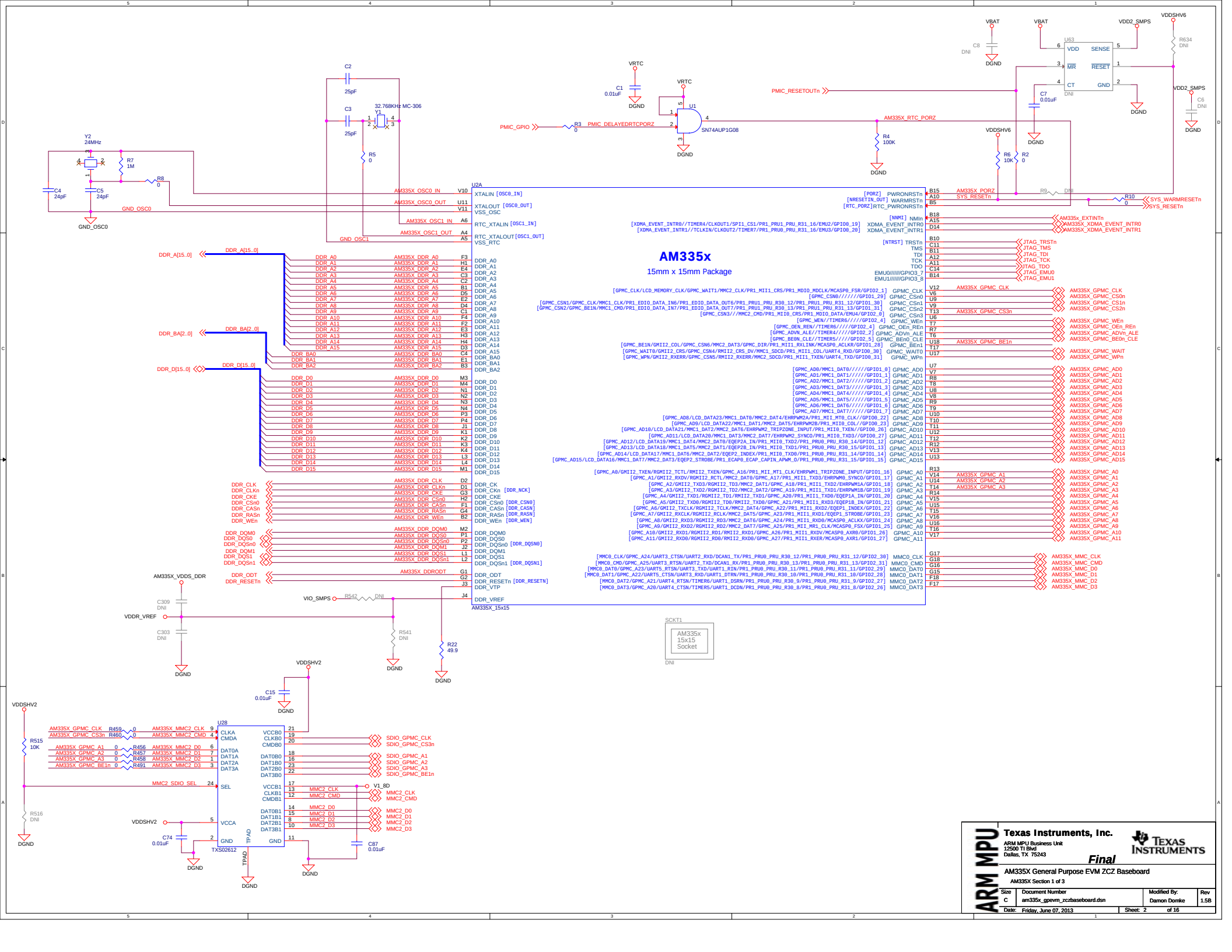

Texas Instruments, Inc.	
ARM MPU Business Unit	
12500 TI Blvd	
Dallas, TX 75243	
Final	
AM335X General Purpose EVM ZCZ Baseboard	
AM335X Section 1 of 3	
Size: C	Document Number: am335x_gpevm_zczbaseboard.dsn
Modified By: Damon Domke	Rev: 1.5B
Date: Friday, June 07, 2013	Sheet: 2 of 16

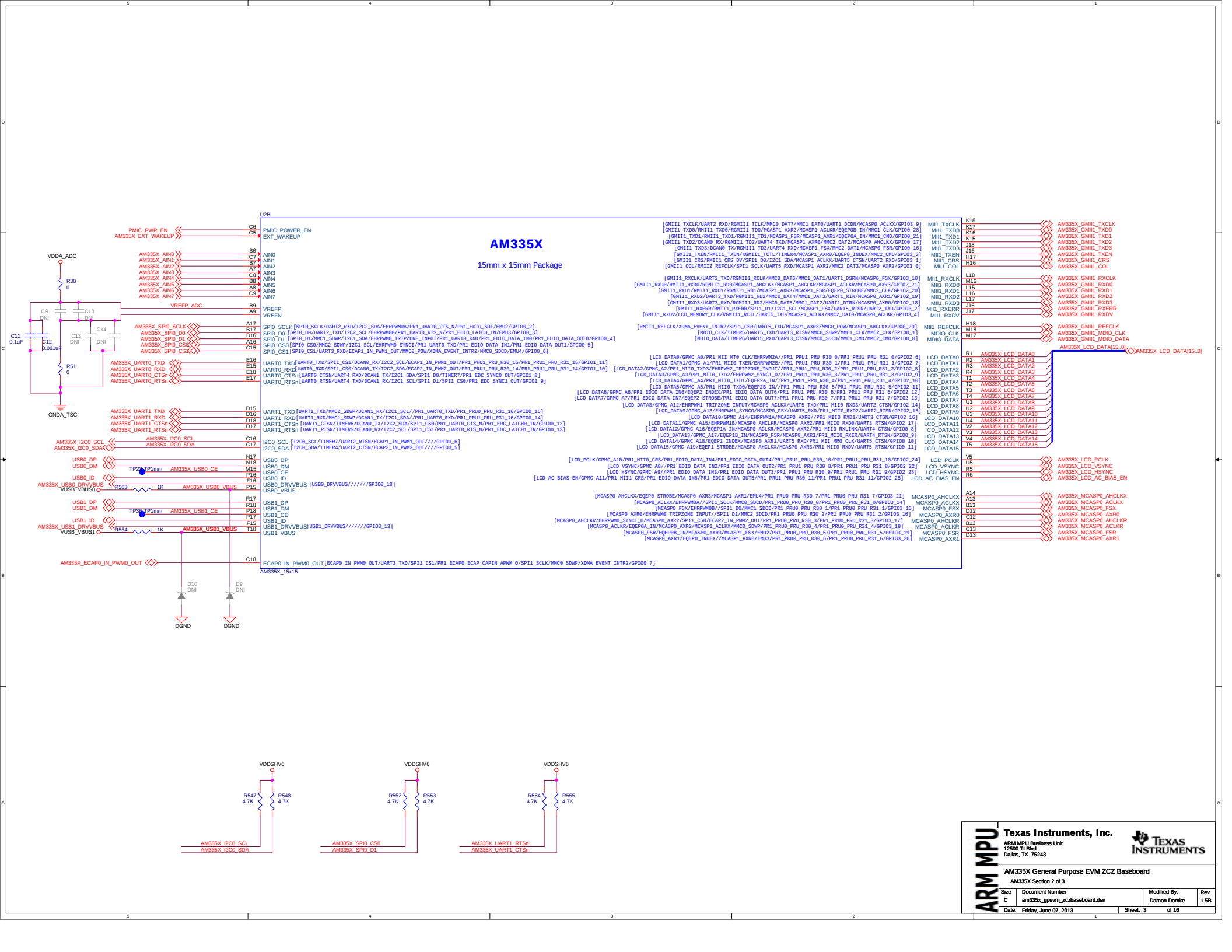
U2B
AM335X
15mm x 15mm Package
AM335X_15x15
PMIC_PWR_EN
AM335X_EXT_WAKEUP
PMIC_POWER_EN
EXT_WAKEUP
VDDA_ADC
R30
0
C9
DNI
C10
DNI
C11
0.1uF
C12
0.001uF
C13
DNI
C14
DNI
R51
0
GNDA_TSC
VREFP_ADC
VREFP
VREFN
AM335X_AIN0
AM335X_AIN1
AM335X_AIN2
AM335X_AIN3
AM335X_AIN4
AM335X_AIN5
AM335X_AIN6
AM335X_AIN7
AIN0
AIN1
AIN2
AIN3
AIN4
AIN5
AIN6
AIN7
AM335X_SPI0_SCLK
AM335X_SPI0_D0
AM335X_SPI0_D1
AM335X_SPI0_CS0
AM335X_SPI0_CS1
SPI0_SCLK [SPI0_SCLK/UART2_RXD/I2C2_SDA/EHRPWM0A/PR1_UART0_CTS_N/PR1_EDIO_SOF/EMU2/GPIO0_2]
SPI0_D0 [SPI0_D0/UART2_TXD/I2C2_SCL/EHRPWM0B/PR1_UART0_RTS_N/PR1_EDIO_LATCH_IN/EMU3/GPIO0_3]
SPI0_D1 [SPI0_D1/MMC1_SDWP/I2C1_SDA/EHRPWM0_TRIPZONE_INPUT/PR1_UART0_RXD/PR1_EDIO_DATA_IN0/PR1_EDIO_DATA_OUT0/GPIO0_4]
SPI0_CS0 [SPI0_CS0/MMC2_SDWP/I2C1_SCL/EHRPWM0_SYNCI/PR1_UART0_TXD/PR1_EDIO_DATA_IN1/PR1_EDIO_DATA_OUT1/GPIO0_5]
SPI0_CS1 [SPI0_CS1/UART3_RXD/ECAP1_IN_PWM1_OUT/MMC0_POW/XDMA_EVENT_INTR2/MMC0_SDCD/EMU4/GPIO0_6]
AM335X_UART0_TXD
AM335X_UART0_RXD
AM335X_UART0_CTSn
AM335X_UART0_RTSn
UART0_TXD [UART0_TXD/SPI1_CS1/DCAN0_RX/I2C2_SCL/ECAP1_IN_PWM1_OUT/PR1_PRU1_PRU_R30_15/PR1_PRU1_PRU_R31_15/GPIO1_11]
UART0_RXD [UART0_RXD/SPI1_CS0/DCAN0_TX/I2C2_SDA/ECAP2_IN_PWM2_OUT/PR1_PRU1_PRU_R30_14/PR1_PRU1_PRU_R31_14/GPIO1_10]
UART0_CTSn [UART0_CTSN/UART4_RXD/DCAN1_TX/I2C1_SDA/SPI1_D0/TIMER7/PR1_EDC_SYNC0_OUT/GPIO1_8]
UART0_RTSn [UART0_RTSN/UART4_TXD/DCAN1_RX/I2C1_SCL/SPI1_D1/SPI1_CS0/PR1_EDC_SYNC1_OUT/GPIO1_9]
AM335X_UART1_TXD
AM335X_UART1_RXD
AM335X_UART1_CTSn
AM335X_UART1_RTSn
UART1_TXD [UART1_TXD/MMC2_SDWP/DCAN1_RX/I2C1_SCL//PR1_UART0_TXD/PR1_PRU0_PRU_R31_16/GPIO0_15]
UART1_RXD [UART1_RXD/MMC1_SDWP/DCAN1_TX/I2C1_SDA//PR1_UART0_RXD/PR1_PRU1_PRU_R31_16/GPIO0_14]
UART1_CTSn [UART1_CTSN/TIMER5/DCAN0_TX/I2C2_SDA/SPI1_CS0/PR1_UART0_CTS_N/PR1_EDC_LATCH0_IN/GPIO0_12]
UART1_RTSn [UART1_RTSN/TIMER5/DCAN0_RX/I2C2_SCL/SPI1_CS1/PR1_UART0_RTS_N/PR1_EDC_LATCH1_IN/GPIO0_13]
AM335X_I2C0_SCL
AM335X_I2C0_SDA
I2C0_SCL [I2C0_SCL/TIMER7/UART2_RTSN/ECAP1_IN_PWM1_OUT////GPIO3_6]
I2C0_SDA [I2C0_SDA/TIMER4/UART2_CTSN/ECAP2_IN_PWM2_OUT////GPIO3_5]
USB0_DP
USB0_DM
USB0_ID
AM335X_USB0_DRVVBUS
VUSB_VBUS0
R563
1K
AM335X_USB0_VBUS
TP2
TP1mm
AM335X_USB0_CE
USB0_DP
USB0_DM
USB0_CE
USB0_ID
USB0_DRVVBUS [USB0_DRVVBUS//////GPIO0_18]
USB0_VBUS
USB1_DP
USB1_DM
USB1_ID
AM335X_USB1_DRVVBUS
VUSB_VBUS1
R564
1K
AM335X_USB1_VBUS
TP3
TP1mm
AM335X_USB1_CE
USB1_DP
USB1_DM
USB1_CE
USB1_ID
USB1_DRVVBUS [USB1_DRVVBUS//////GPIO3_13]
USB1_VBUS
AM335X_ECAP0_IN_PWM0_OUT
ECAP0_IN_PWM0_OUT [ECAP0_IN_PWM0_OUT/UART3_TXD/SPI1_CS1/PR1_ECAP0_ECAP_CAPIN_APWM_O/SPI1_SCLK/MMC0_SDWP/XDMA_EVENT_INTR2/GPIO0_7]
D10
DNI
D9
DNI
DGND
DGND
[GMII1_TXCLK/UART2_RXD/RGMII1_TCLK/MMC0_DAT7/MMC1_DAT0/UART1_DCDN/MCASP0_ACLKX/GPIO3_9]
[GMII1_TXD0/RMII1_TXD0/RGMII1_TD0/MCASP1_AXR2/MCASP1_ACLKR/EQEP0B_IN/MMC1_CLK/GPIO0_28]
[GMII1_TXD1/RMII1_TXD1/RGMII1_TD1/MCASP1_FSR/MCASP1_AXR1/EQEP0A_IN/MMC1_CMD/GPIO0_21]
[GMII1_TXD2/DCAN0_RX/RGMII1_TD2/UART4_TXD/MCASP1_AXR0/MMC2_DAT2/MCASP0_AHCLKX/GPIO0_17]
[GMII1_TXD3/DCAN0_TX/RGMII1_TD3/UART4_RXD/MCASP1_FSX/MMC2_DAT1/MCASP0_FSR/GPIO0_16]
[GMII1_TXEN/RMII1_TXEN/RGMII1_TCTL/TIMER4/MCASP1_AXR0/EQEP0_INDEX/MMC2_CMD/GPIO3_3]
[GMII1_CRS/RMII1_CRS_DV/SPI1_D0/I2C1_SDA/MCASP1_ACLKX/UART5_CTSN/UART2_RXD/GPIO3_1]
[GMII1_COL/RMII2_REFCLK/SPI1_SCLK/UART5_RXD/MCASP1_AXR2/MMC2_DAT3/MCASP0_AXR2/GPIO3_0]
MII1_TXCLK
MII1_TXD0
MII1_TXD1
MII1_TXD2
MII1_TXD3
MII1_TXEN
MII1_CRS
MII1_COL
K18
K17
K16
K15
J18
J16
H17
H16
AM335X_GMII1_TXCLK
AM335X_GMII1_TXD0
AM335X_GMII1_TXD1
AM335X_GMII1_TXD2
AM335X_GMII1_TXD3
AM335X_GMII1_TXEN
AM335X_GMII1_CRS
AM335X_GMII1_COL
[GMII1_RXCLK/UART2_TXD/RGMII1_RCLK/MMC0_DAT6/MMC1_DAT1/UART1_DSRN/MCASP0_FSX/GPIO3_10]
[GMII1_RXD0/RMII1_RXD0/RGMII1_RD0/MCASP1_AHCLKX/MCASP1_AHCLKR/MCASP1_ACLKR/MCASP0_AXR3/GPIO2_21]
[GMII1_RXD1/RMII1_RXD1/RGMII1_RD1/MCASP1_AXR3/MCASP1_FSR/EQEP0_STROBE/MMC2_CLK/GPIO2_20]
[GMII1_RXD2/UART3_TXD/RGMII1_RD2/MMC0_DAT4/MMC1_DAT3/UART1_RIN/MCASP0_AXR1/GPIO2_19]
[GMII1_RXD3/UART3_RXD/RGMII1_RD3/MMC0_DAT5/MMC1_DAT2/UART1_DTRN/MCASP0_AXR0/GPIO2_18]
[GMII1_RXERR/RMII1_RXERR/SPI1_D1/I2C1_SCL/MCASP1_FSX/UART5_RTSN/UART2_TXD/GPIO3_2]
[GMII1_RXDV/LCD_MEMORY_CLK/RGMII1_RCTL/UART5_TXD/MCASP1_ACLKX/MMC2_DAT0/MCASP0_ACLKR/GPIO3_4]
MII1_RXCLK
MII1_RXD0
MII1_RXD1
MII1_RXD2
MII1_RXD3
MII1_RXERR
MII1_RXDV
L18
M16
L15
L16
L17
J15
J17
AM335X_GMII1_RXCLK
AM335X_GMII1_RXD0
AM335X_GMII1_RXD1
AM335X_GMII1_RXD2
AM335X_GMII1_RXD3
AM335X_GMII1_RXERR
AM335X_GMII1_RXDV
[RMII1_REFCLK/XDMA_EVENT_INTR2/SPI1_CS0/UART5_TXD/MCASP1_AXR3/MMC0_POW/MCASP1_AHCLKX/GPIO0_29]
[MDIO_CLK/TIMER5/UART5_TXD/UART3_RTSN/MMC0_SDWP/MMC1_CLK/MMC2_CLK/GPIO0_1]
[MDIO_DATA/TIMER6/UART5_RXD/UART3_CTSN/MMC0_SDCD/MMC1_CMD/MMC2_CMD/GPIO0_0]
MII1_REFCLK
MDIO_CLK
MDIO_DATA
H18
M18
M17
AM335X_GMII1_REFCLK
AM335X_GMII1_MDIO_CLK
AM335X_GMII1_MDIO_DATA
[LCD_DATA0/GPMC_A0/PR1_MII_MT0_CLK/EHRPWM2A//PR1_PRU1_PRU_R30_0/PR1_PRU1_PRU_R31_0/GPIO2_6]
[LCD_DATA1/GPMC_A1/PR1_MII1_TXEN/EHRPWM2B//PR1_PRU1_PRU_R30_1/PR1_PRU1_PRU_R31_1/GPIO2_7]
[LCD_DATA2/GPMC_A2/PR1_MII0_TXD3/EHRPWM2_TRIPZONE_INPUT//PR1_PRU1_PRU_R30_2/PR1_PRU1_PRU_R31_2/GPIO2_8]
[LCD_DATA3/GPMC_A3/PR1_MII0_TXD2/EHRPWM2_SYNCI_O//PR1_PRU1_PRU_R30_3/PR1_PRU1_PRU_R31_3/GPIO2_9]
[LCD_DATA4/GPMC_A4/PR1_MII0_TXD1/EQEP2A_IN//PR1_PRU1_PRU_R30_4/PR1_PRU1_PRU_R31_4/GPIO2_10]
[LCD_DATA5/GPMC_A5/PR1_MII0_TXD0/EQEP2B_IN//PR1_PRU1_PRU_R30_5/PR1_PRU1_PRU_R31_5/GPIO2_11]
[LCD_DATA6/GPMC_A6/PR1_EDIO_DATA_IN6/EQEP2_INDEX/PR1_EDIO_DATA_OUT6/PR1_PRU1_PRU_R30_6/PR1_PRU1_PRU_R31_6/GPIO2_12]
[LCD_DATA7/GPMC_A7/PR1_EDIO_DATA_IN7/EQEP2_STROBE/PR1_EDIO_DATA_OUT7/PR1_PRU1_PRU_R30_7/PR1_PRU1_PRU_R31_7/GPIO2_13]
[LCD_DATA8/GPMC_A12/EHRPWM1_TRIPZONE_INPUT/MCASP0_ACLKX/UART5_TXD/PR1_MII0_RXD3/UART2_CTSN/GPIO2_14]
[LCD_DATA9/GPMC_A13/EHRPWM1_SYNCO/MCASP0_FSX/UART5_RXD/PR1_MII0_RXD2/UART2_RTSN/GPIO2_15]
[LCD_DATA10/GPMC_A14/EHRPWM1A/MCASP0_AXR0//PR1_MII0_RXD1/UART3_CTSN/GPIO2_16]
[LCD_DATA11/GPMC_A15/EHRPWM1B/MCASP0_AHCLKR/MCASP0_AXR2/PR1_MII0_RXD0/UART3_RTSN/GPIO2_17]
[LCD_DATA12/GPMC_A16/EQEP1A_IN/MCASP0_ACLKR/MCASP0_AXR2/PR1_MII0_RXLINK/UART4_CTSN/GPIO0_8]
[LCD_DATA13/GPMC_A17/EQEP1B_IN/MCASP0_FSR/MCASP0_AXR3/PR1_MII0_RXER/UART4_RTSN/GPIO0_9]
[LCD_DATA14/GPMC_A18/EQEP1_INDEX/MCASP0_AXR1/UART5_RXD/PR1_MII_MR0_CLK/UART5_CTSN/GPIO0_10]
[LCD_DATA15/GPMC_A19/EQEP1_STROBE/MCASP0_AHCLKX/MCASP0_AXR3/PR1_MII0_RXDV/UART5_RTSN/GPIO0_11]
LCD_DATA0
LCD_DATA1
LCD_DATA2
LCD_DATA3
LCD_DATA4
LCD_DATA5
LCD_DATA6
LCD_DATA7
LCD_DATA8
LCD_DATA9
LCD_DATA10
LCD_DATA11
LCD_DATA12
LCD_DATA13
LCD_DATA14
LCD_DATA15
R1
R2
R3
R4
T1
T2
T3
T4
U1
U2
U3
U4
V2
V3
V4
T5
AM335X_LCD_DATA0
AM335X_LCD_DATA1
AM335X_LCD_DATA2
AM335X_LCD_DATA3
AM335X_LCD_DATA4
AM335X_LCD_DATA5
AM335X_LCD_DATA6
AM335X_LCD_DATA7
AM335X_LCD_DATA8
AM335X_LCD_DATA9
AM335X_LCD_DATA10
AM335X_LCD_DATA11
AM335X_LCD_DATA12
AM335X_LCD_DATA13
AM335X_LCD_DATA14
AM335X_LCD_DATA15
AM335X_LCD_DATA[15..0]
AM335X_LCD_DATA[15..0]
[LCD_PCLK/GPMC_A10/PR1_MII0_CRS/PR1_EDIO_DATA_IN4/PR1_EDIO_DATA_OUT4/PR1_PRU1_PRU_R30_10/PR1_PRU1_PRU_R31_10/GPIO2_24]
[LCD_VSYNC/GPMC_A8//PR1_EDIO_DATA_IN2/PR1_EDIO_DATA_OUT2/PR1_PRU1_PRU_R30_8/PR1_PRU1_PRU_R31_8/GPIO2_22]
[LCD_HSYNC/GPMC_A9//PR1_EDIO_DATA_IN3/PR1_EDIO_DATA_OUT3/PR1_PRU1_PRU_R30_9/PR1_PRU1_PRU_R31_9/GPIO2_23]
[LCD_AC_BIAS_EN/GPMC_A11/PR1_MII1_CRS/PR1_EDIO_DATA_IN5/PR1_EDIO_DATA_OUT5/PR1_PRU1_PRU_R30_11/PR1_PRU1_PRU_R31_11/GPIO2_25]
LCD_PCLK
LCD_VSYNC
LCD_HSYNC
LCD_AC_BIAS_EN
V5
U5
R5
R6
AM335X_LCD_PCLK
AM335X_LCD_VSYNC
AM335X_LCD_HSYNC
AM335X_LCD_AC_BIAS_EN
[MCASP0_AHCLKX/EQEP0_STROBE/MCASP0_AXR3/MCASP1_AXR1/EMU4/PR1_PRU1_PRU_R30_7/PR1_PRU0_PRU_R31_7/GPIO3_21]
[MCASP0_ACLKX/EHRPWM0A//SPI1_SCLK/MMC0_SDCD/PR1_PRU0_PRU_R30_0/PR1_PRU0_PRU_R31_0/GPIO3_14]
[MCASP0_FSX/EHRPWM0B//SPI1_D0/MMC1_SDCD/PR1_PRU0_PRU_R30_1/PR1_PRU0_PRU_R31_1/GPIO3_15]
[MCASP0_AXR0/EHRPWM0_TRIPZONE_INPUT//SPI1_D1/MMC2_SDCD/PR1_PRU0_PRU_R30_2/PR1_PRU0_PRU_R31_2/GPIO3_16]
[MCASP0_AHCLKR/EHRPWM0_SYNCI_O/MCASP0_AXR2/SPI1_CS0/ECAP2_IN_PWM2_OUT/PR1_PRU0_PRU_R30_3/PR1_PRU0_PRU_R31_3/GPIO3_17]
[MCASP0_ACLKR/EQEP0A_IN/MCASP0_AXR2/MCASP1_ACLKX/MMC0_SDWP/PR1_PRU0_PRU_R30_4/PR1_PRU0_PRU_R31_4/GPIO3_18]
[MCASP0_FSR/EQEP0B_IN/MCASP0_AXR3/MCASP1_FSX/EMU2/PR1_PRU0_PRU_R30_5/PR1_PRU0_PRU_R31_5/GPIO3_19]
[MCASP0_AXR1/EQEP0_INDEX//MCASP1_AXR0/EMU3/PR1_PRU0_PRU_R30_6/PR1_PRU0_PRU_R31_6/GPIO3_20]
MCASP0_AHCLKX
MCASP0_ACLKX
MCASP0_FSX
MCASP0_AXR0
MCASP0_AHCLKR
MCASP0_ACLKR
MCASP0_FSR
MCASP0_AXR1
A14
A13
B13
D12
C12
B12
C13
D13
AM335X_MCASP0_AHCLKX
AM335X_MCASP0_ACLKX
AM335X_MCASP0_FSX
AM335X_MCASP0_AXR0
AM335X_MCASP0_AHCLKR
AM335X_MCASP0_ACLKR
AM335X_MCASP0_FSR
AM335X_MCASP0_AXR1
VDDSHV6
R547
4.7K
R548
4.7K
AM335X_I2C0_SCL
AM335X_I2C0_SDA
VDDSHV6
R552
4.7K
R553
4.7K
AM335X_SPI0_CS0
AM335X_SPI0_D1
VDDSHV6
R554
4.7K
R555
4.7K
AM335X_UART1_RTSn
AM335X_UART1_CTSn
ARM MPU
Texas Instruments, Inc.
ARM MPU Business Unit
12500 TI Blvd
Dallas, TX 75243
AM335X General Purpose EVM ZCZ Baseboard
AM335X Section 2 of 3
Size C
Document Number am335x_gpevm_zczbaseboard.dsn
Modified By: Damon Domke
Rev 1.5B
Date: Friday, June 07, 2013
Sheet: 3 of 16

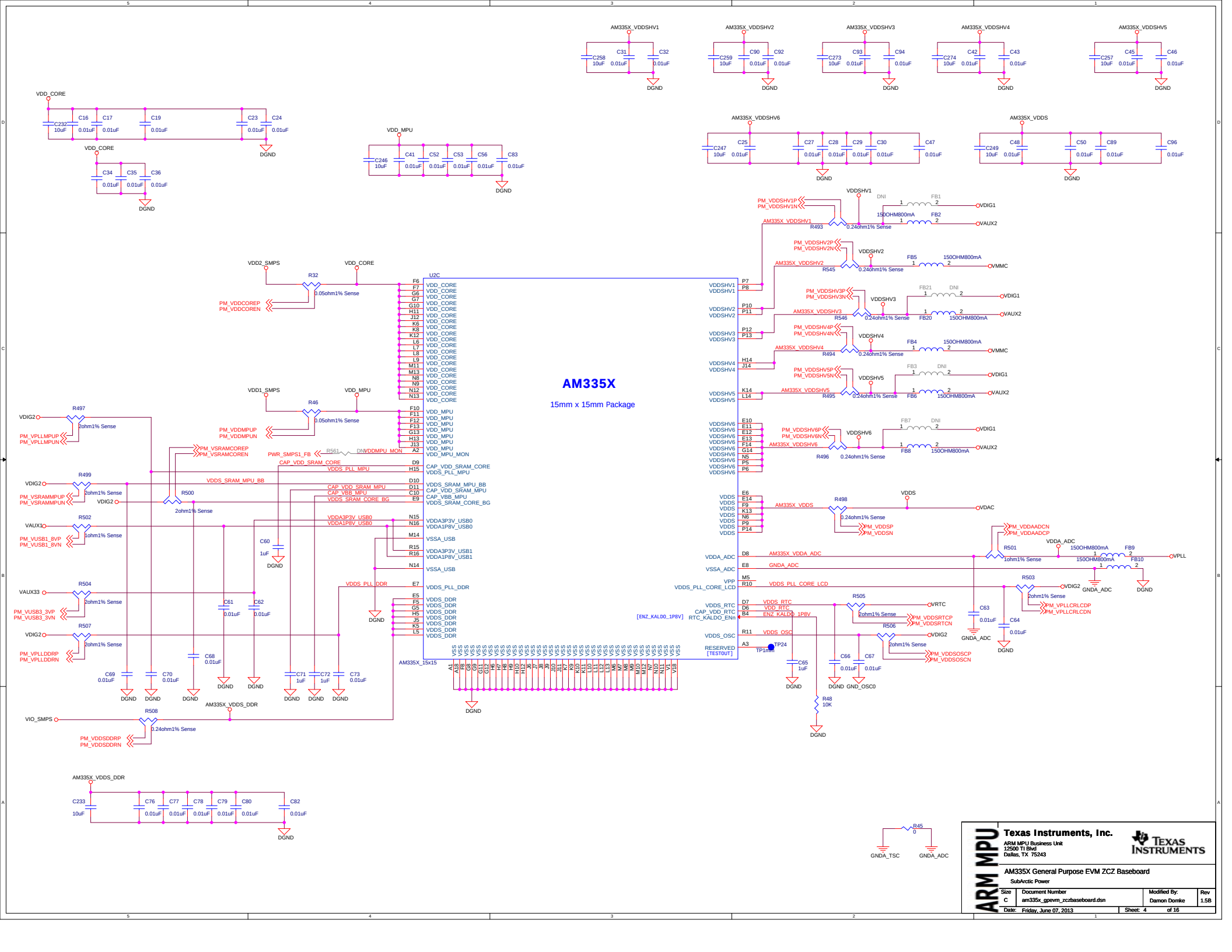

Texas Instruments, Inc.
ARM MPU Business Unit
12500 TI Blvd
Dallas, TX 75243

AM335X General Purpose EVM ZCZ Baseboard
SubArctic Power

Size	Document Number	Modified By:	Rev
C	am335x_gpevm_zczbaseboard.dsn	Damon Domke	1.5B

Date: Friday, June 07, 2013 Sheet: 4 of 16

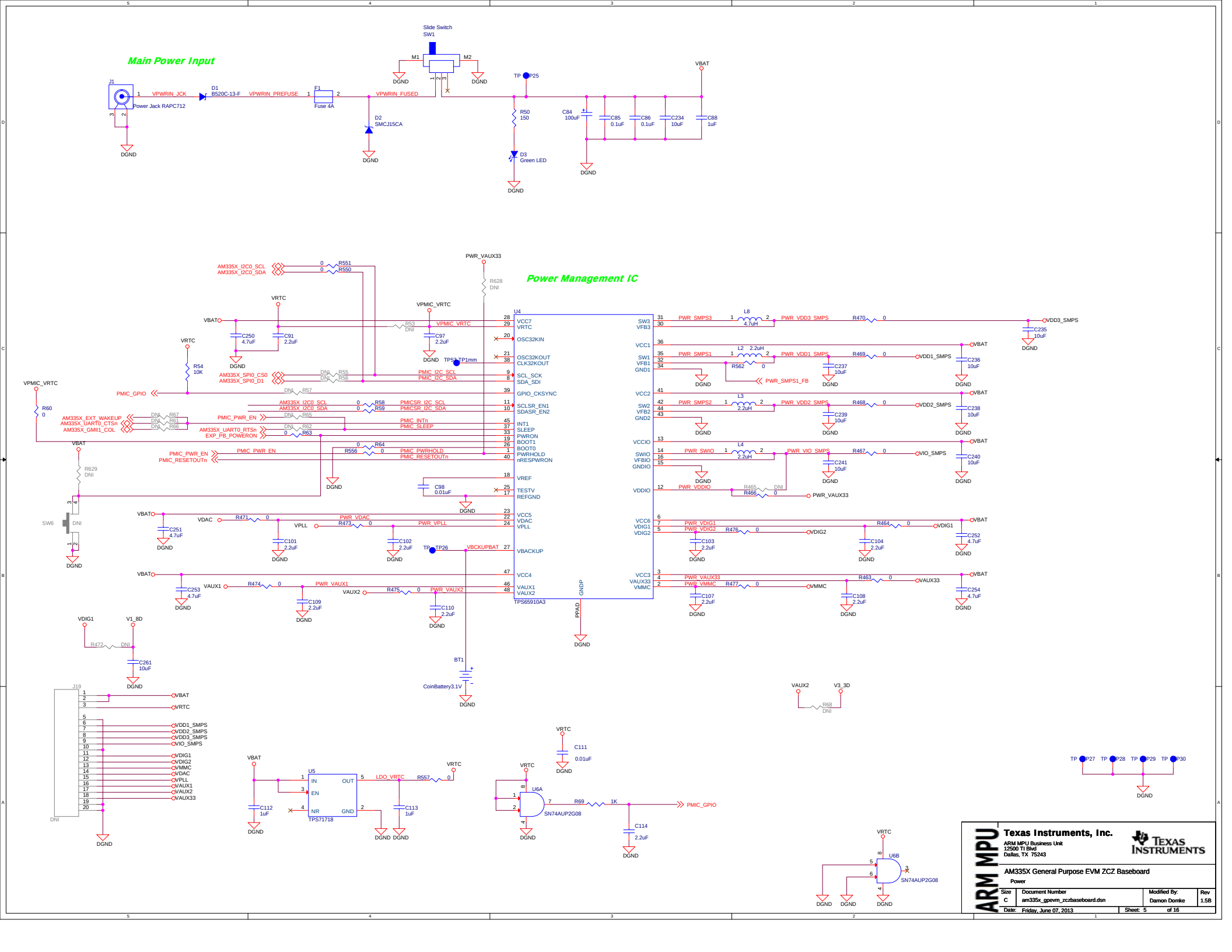
Main Power Input
Slide Switch
SW1
Power Jack RAPC712
B520C-13-F
Fuse 4A
SMCJ15CA
Green LED
Power Management IC
TPS65910A3
SN74AUP2G08
TPS71718
CoinBattery3.1V
ARM MPU
Texas Instruments, Inc.
ARM MPU Business Unit
12500 TI Blvd
Dallas, TX 75243
AM335X General Purpose EVM ZCZ Baseboard
Power
Document Number
am335x_gpevm_zczbaseboard.dsn
Modified By:
Damon Domke
Rev
1.5B
Date: Friday, June 07, 2013
Sheet: 5 of 16

ID Memory

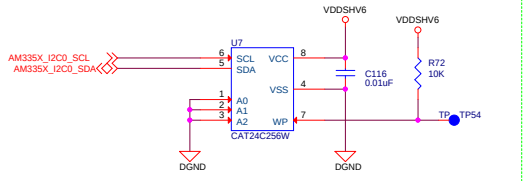

JTAG Connector

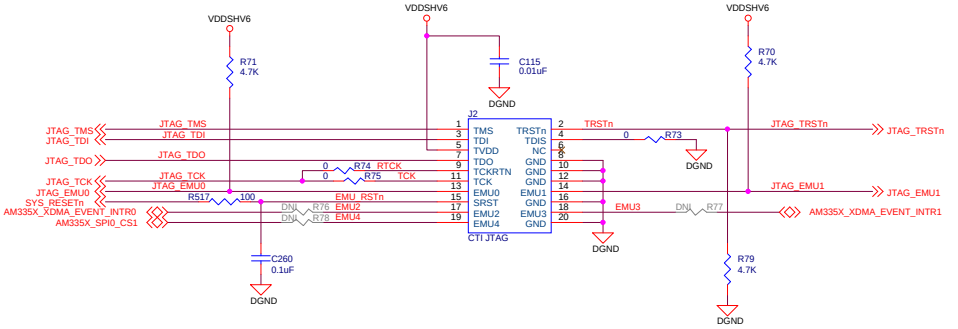

User LED's

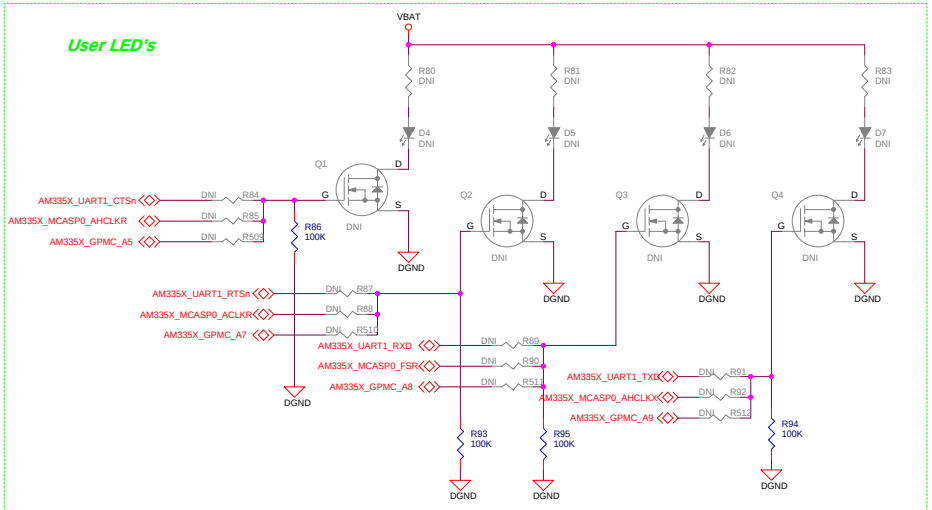

Clockout Measurement Testpoints

ADC Test

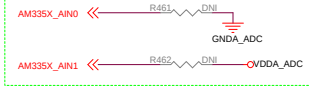

User Reset / Interrupt Switches

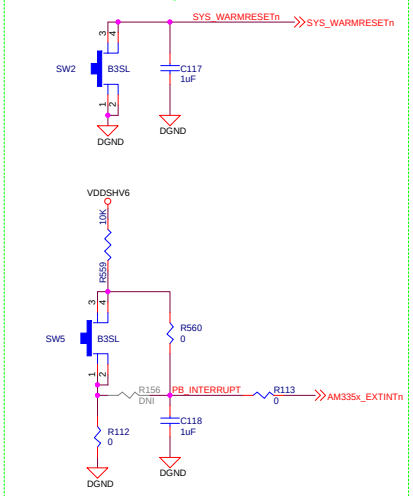

Boot Configuration

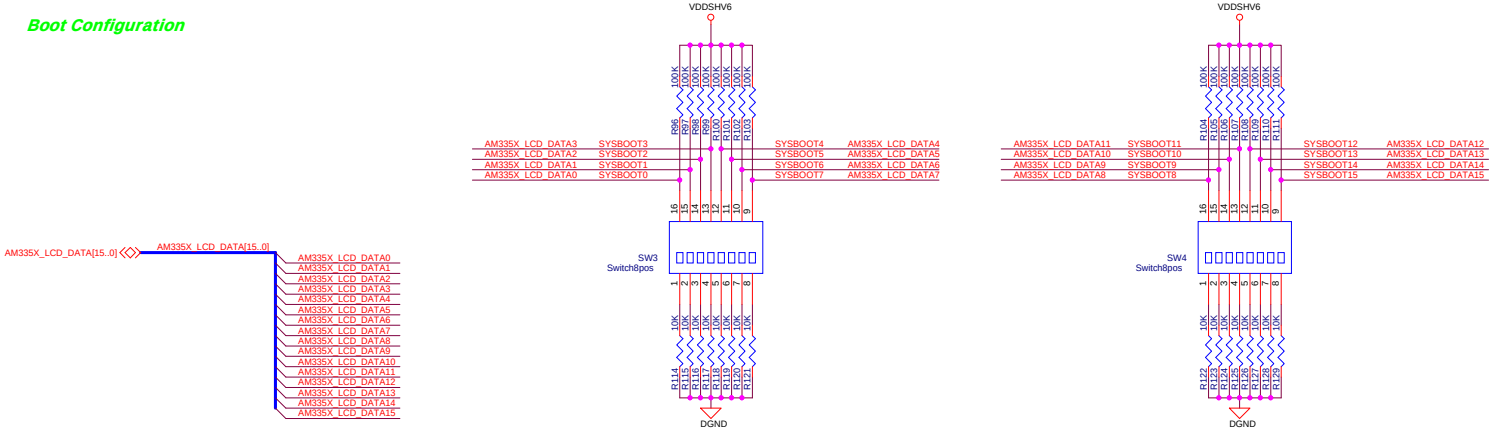

ARM MPU	**Texas Instruments, Inc.** ARM MPU Business Unit 12500 TI Blvd Dallas, TX 75243		
	AM335X General Purpose EVM ZCZ Baseboard Debug/Configuration		
Size: C	Document Number: am335x_gpevm_zczbaseboard.dsn	Modified By: Damon Domke	Rev: 1.5B
Date: Friday, June 07, 2013		Sheet: 6 of 16	

DDR3 SDRAM

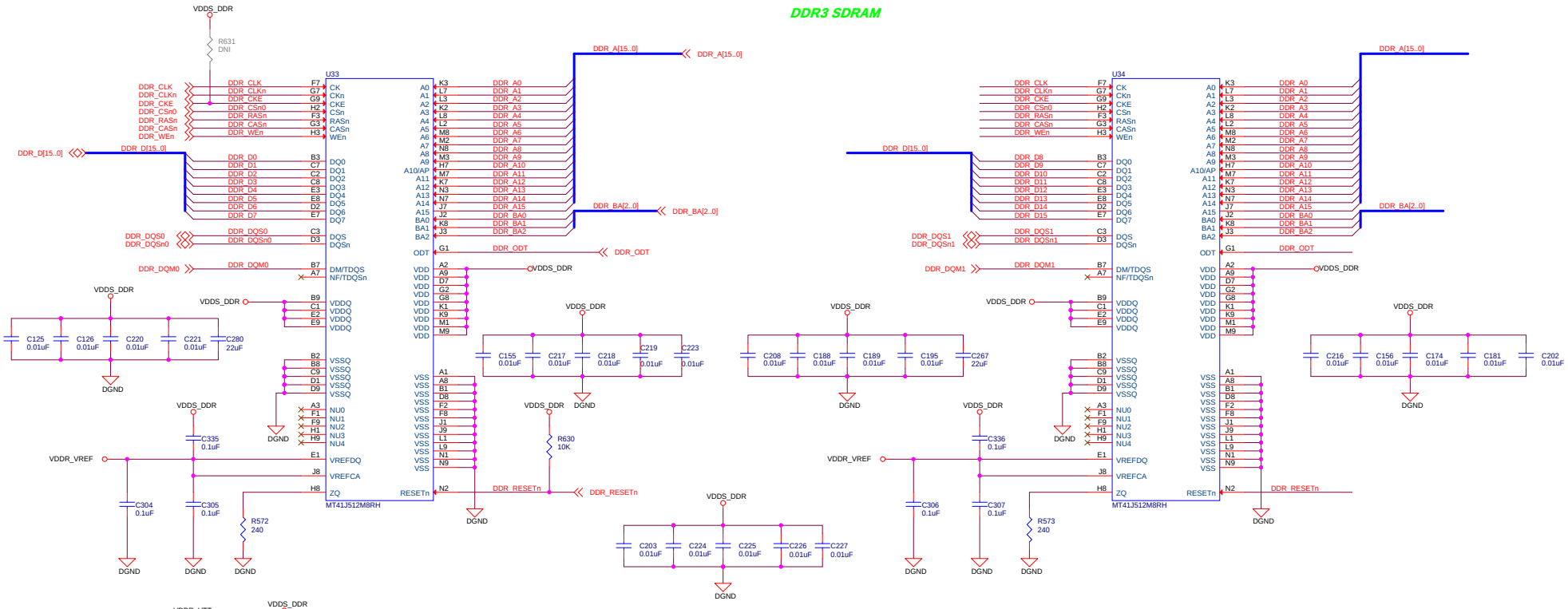

NAND Memory

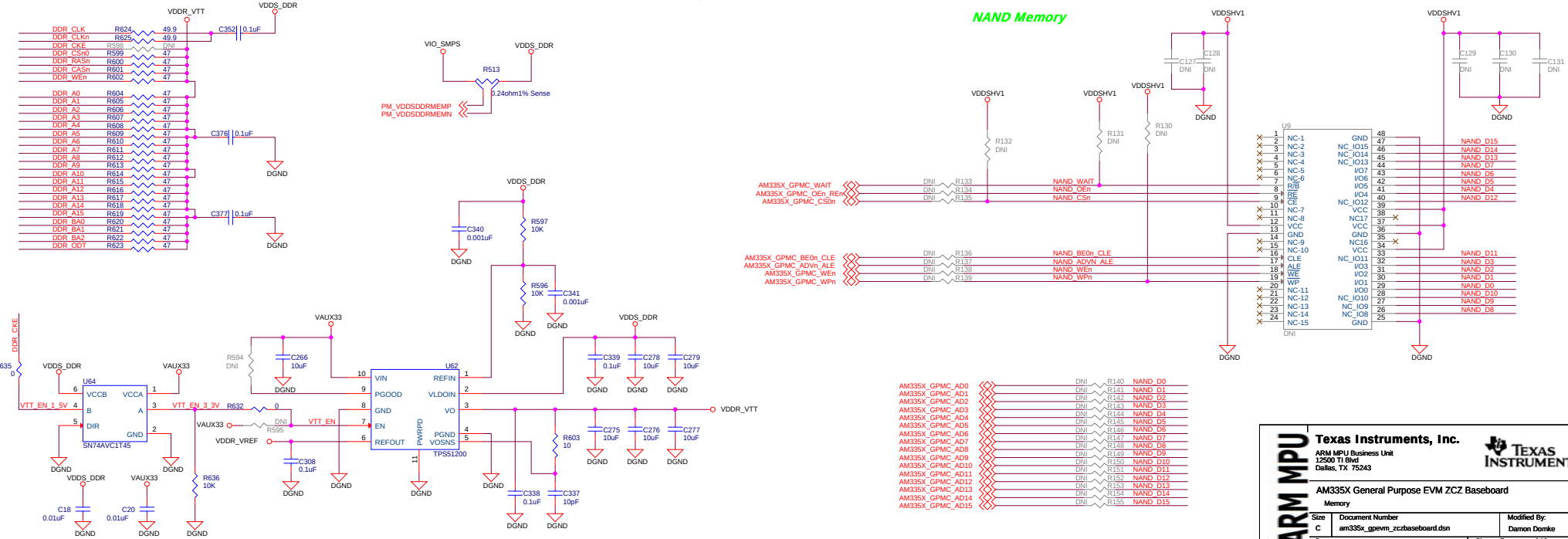

Texas Instruments, Inc.
ARM MPU Business Unit
12500 TI Blvd
Dallas, TX 75243

ARM MPU

AM335X General Purpose EVM ZCZ Baseboard

Memory

Size	Document Number	Modified By:	Rev
C	am335x_gpevm_zczbaseboard.dsn	Damon Domke	1.5B
Date: Friday, June 07, 2013		Sheet: 7 of 16	

Expansion Connector - EXP0

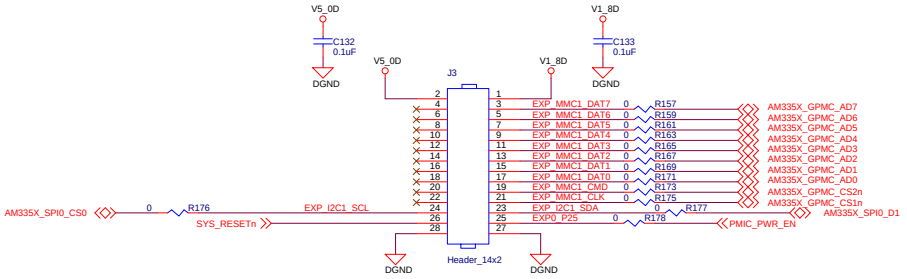

Expansion Connector - EXP1

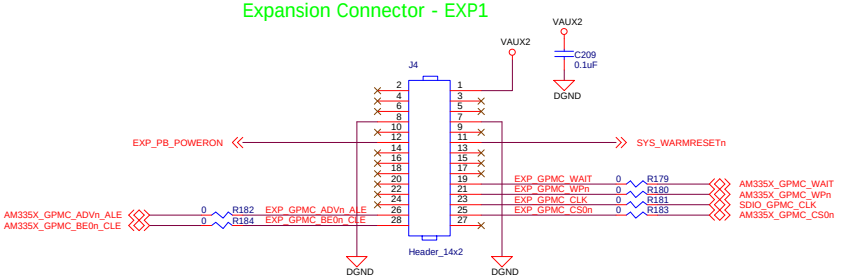

Expansion Connector - EXP2

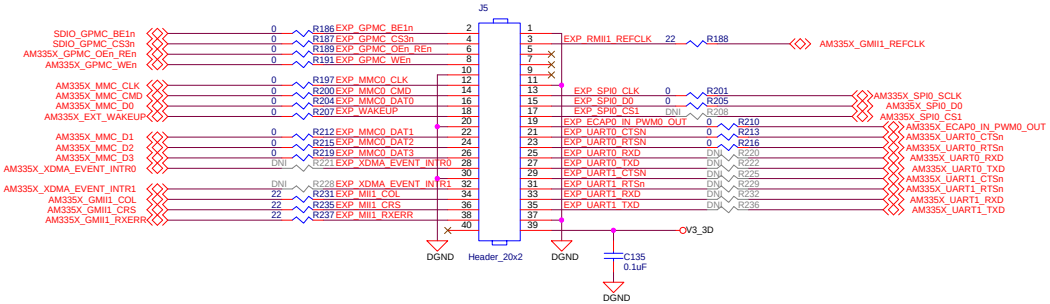

Expansion Connector - EXP3

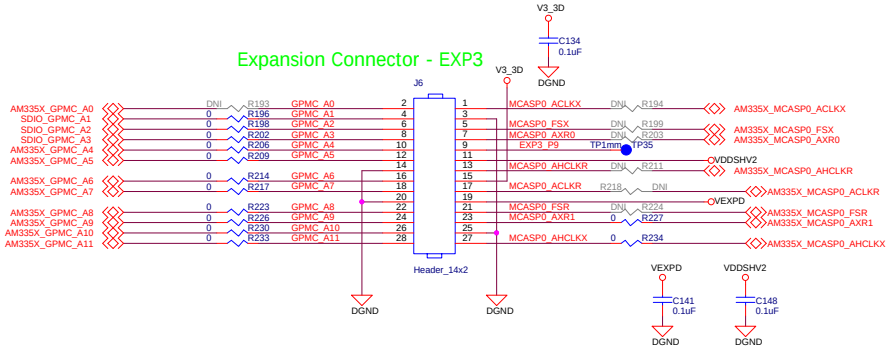

ARM MPU	**Texas Instruments, Inc.** ARM MPU Business Unit 12500 TI Blvd Dallas, TX 75243		
	AM335X General Purpose EVM ZCZ Baseboard Expansion Connectors		
Size: C	Document Number: am335x_gpevm_zczbaseboard.dsn	Modified By: Damon Domke	Rev: 1.5B
Date: Friday, June 07, 2013		Sheet: 8 of 16	

LCD Connectors

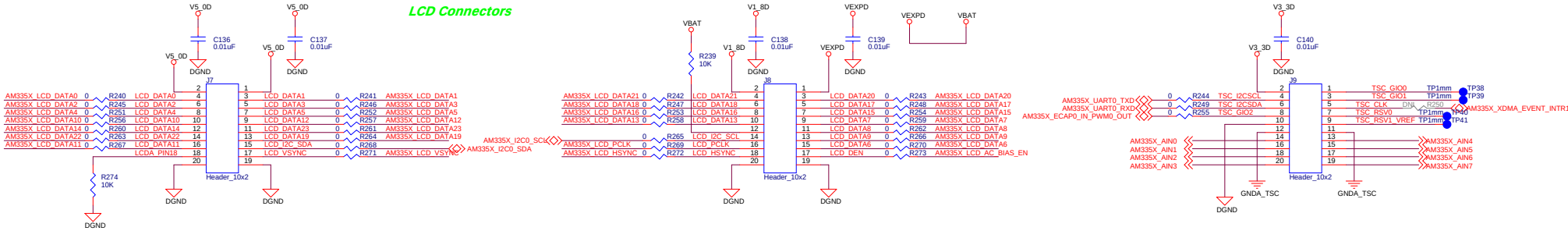

HDMI Transceiver

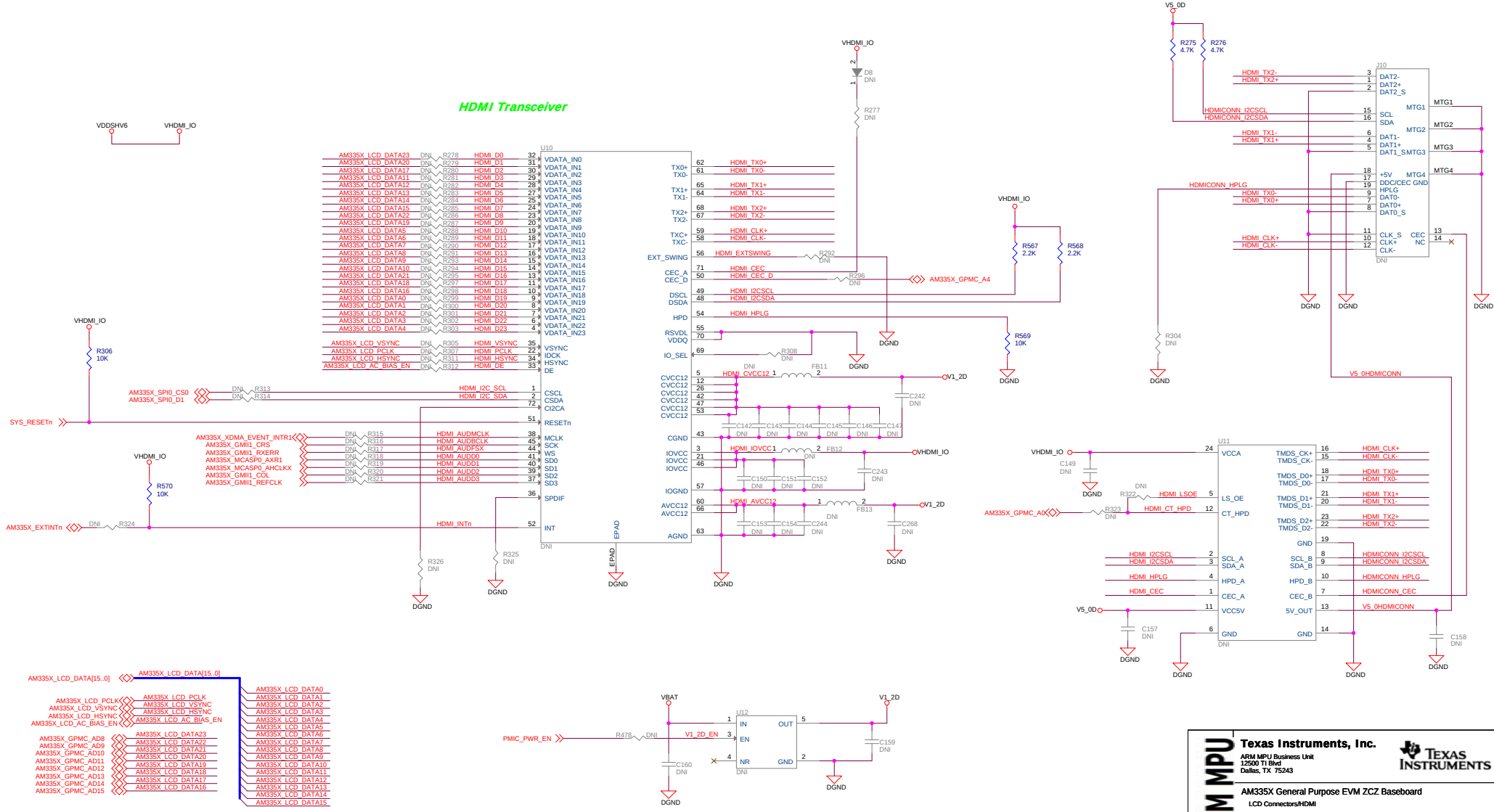

Texas Instruments, Inc.
ARM MPU Business Unit
12500 TI Blvd
Dallas, TX 75243

ARM MPU

AM335X General Purpose EVM ZCZ Baseboard

LCD Connectors/HDMI

Size	Document Number	Modified By:	Rev
C	am335x_gpevm_zczbaseboard.dsn	Damon Domke	1.5B
Date: Friday, June 07, 2013		Sheet: 9 of 16	

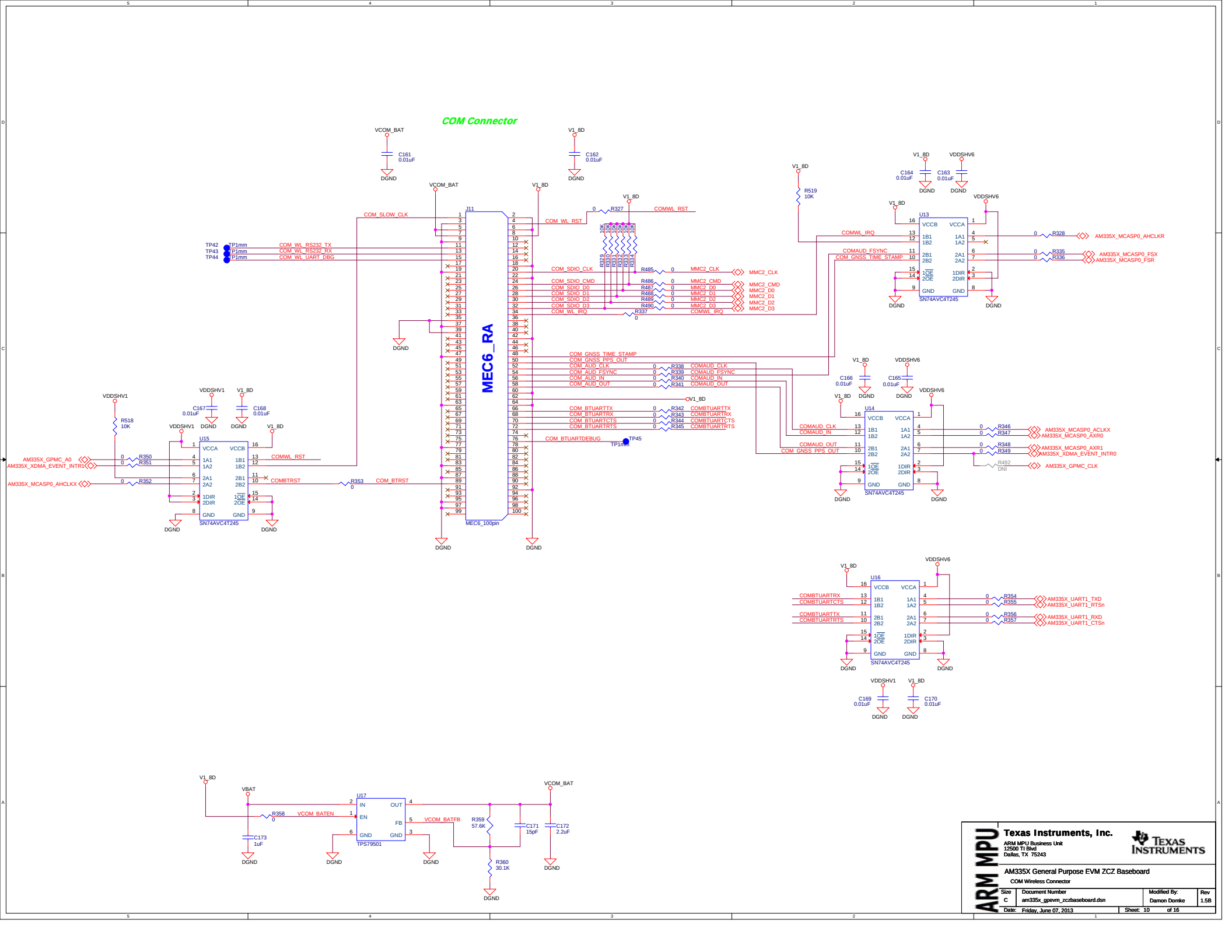

Texas Instruments, Inc.
ARM MPU Business Unit
12500 TI Blvd
Dallas, TX 75243

ARM MPU

AM335X General Purpose EVM ZCZ Baseboard
COM Wireless Connector

Size	Document Number	Modified By:	Rev
C	am335x_gpevm_zczbaseboard.dsn	Damon Domke	1.5B
Date: Friday, June 07, 2013		Sheet: 10 of 16	

RS-232

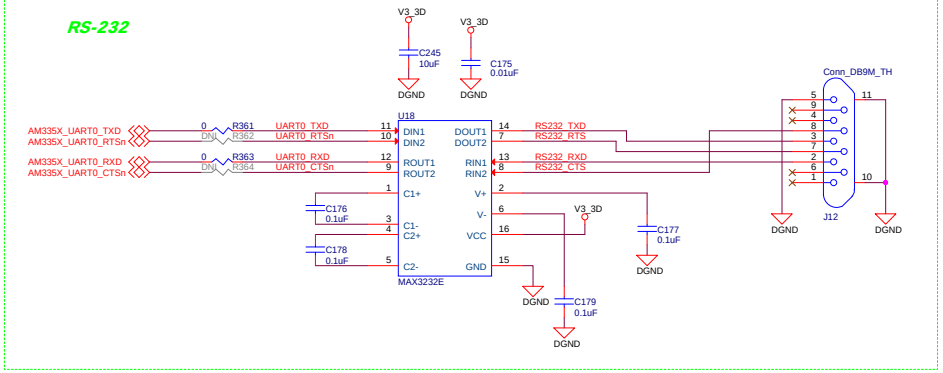

SD/MMC Connector

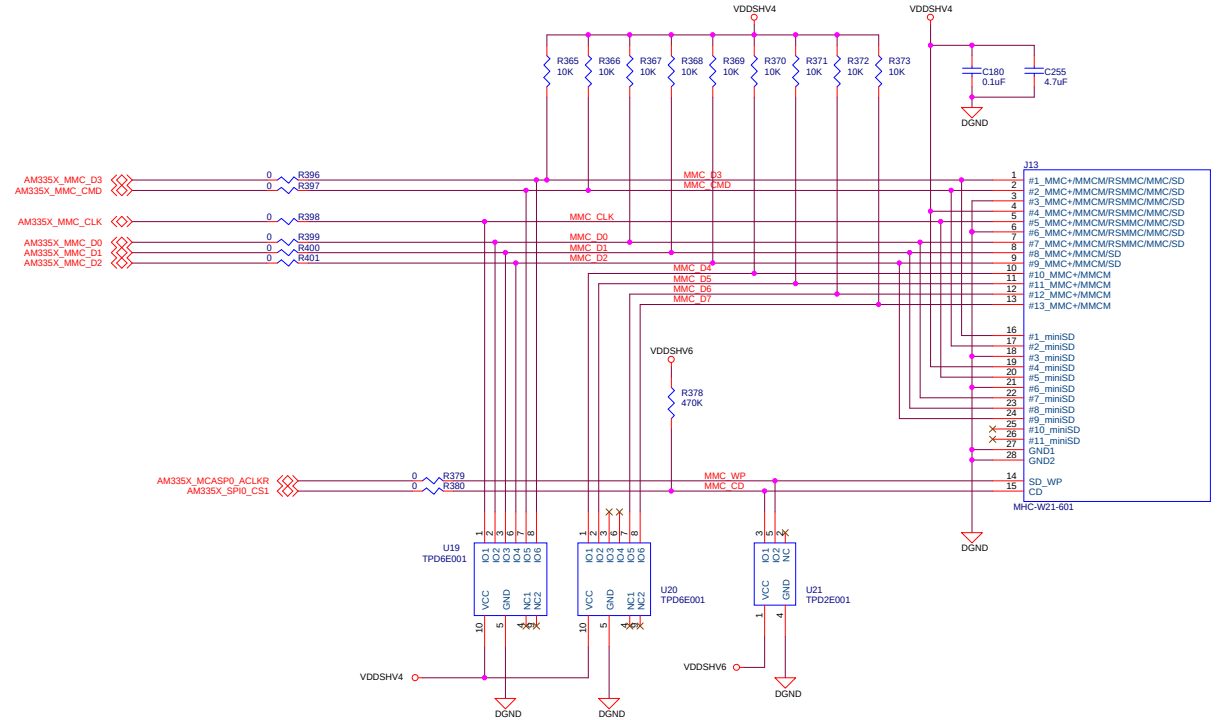

Texas Instruments, Inc.
ARM MPU Business Unit
12500 TI Blvd
Dallas, TX 75243

ARM MPU

AM335X General Purpose EVM ZCZ Baseboard
Serial & SDMMC Interfaces

Size	Document Number	Modified By:	Rev
C	am335x_gpevm_zczbaseboard.dsn	Damon Domke	1.5B
Date: Friday, June 07, 2013		Sheet: 11 of 16	

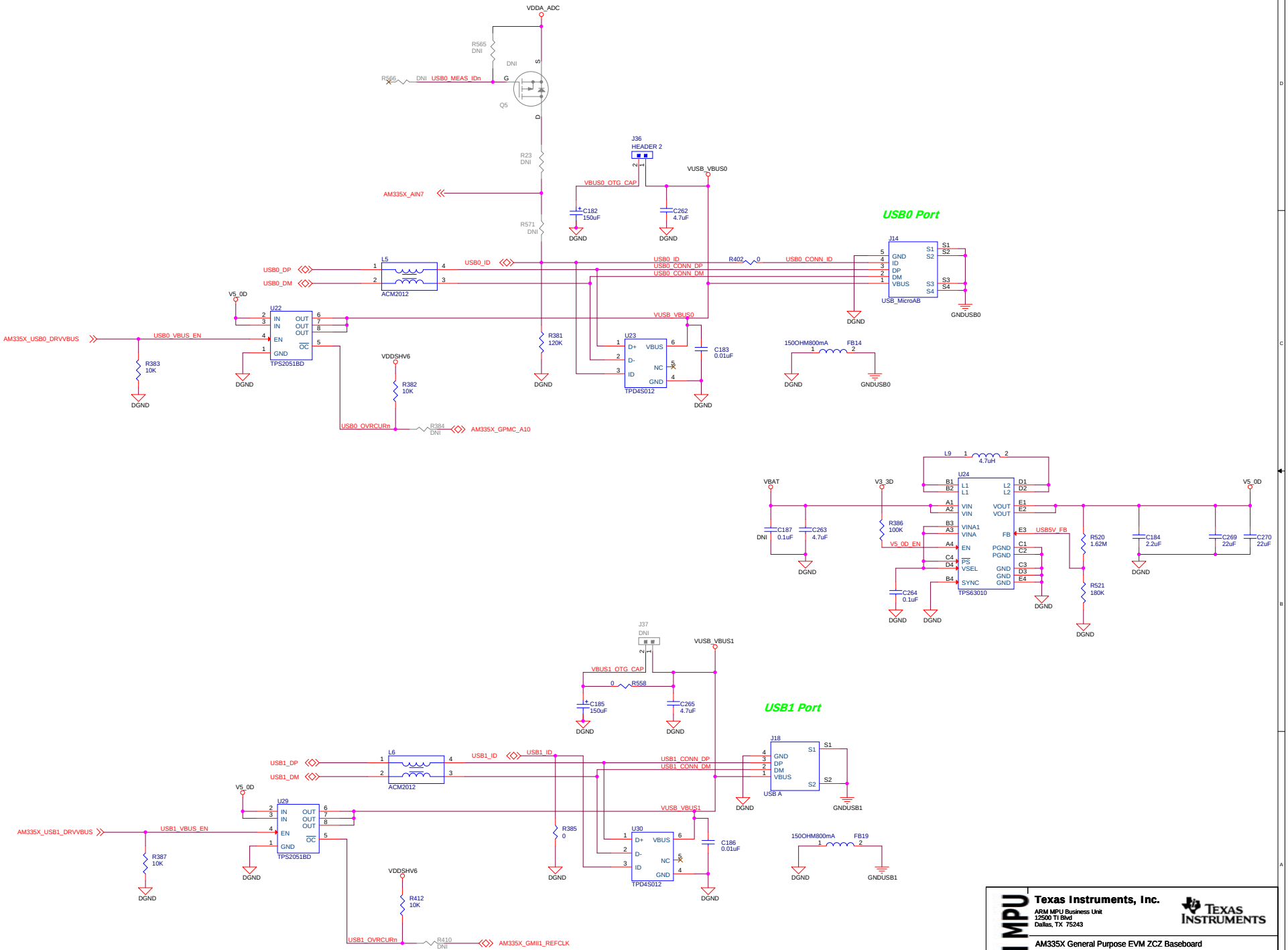

ARM MPU

Texas Instruments, Inc.
ARM MPU Business Unit
12500 TI Blvd
Dallas, TX 75243

TEXAS INSTRUMENTS

AM335X General Purpose EVM ZCZ Baseboard
USB

Size	Document Number	Modified By:	Rev
C	am335x_gpevm_zczbaseboard.dsn	Damon Domke	1.5B
Date: Friday, June 07, 2013		Sheet: 12 of 16	

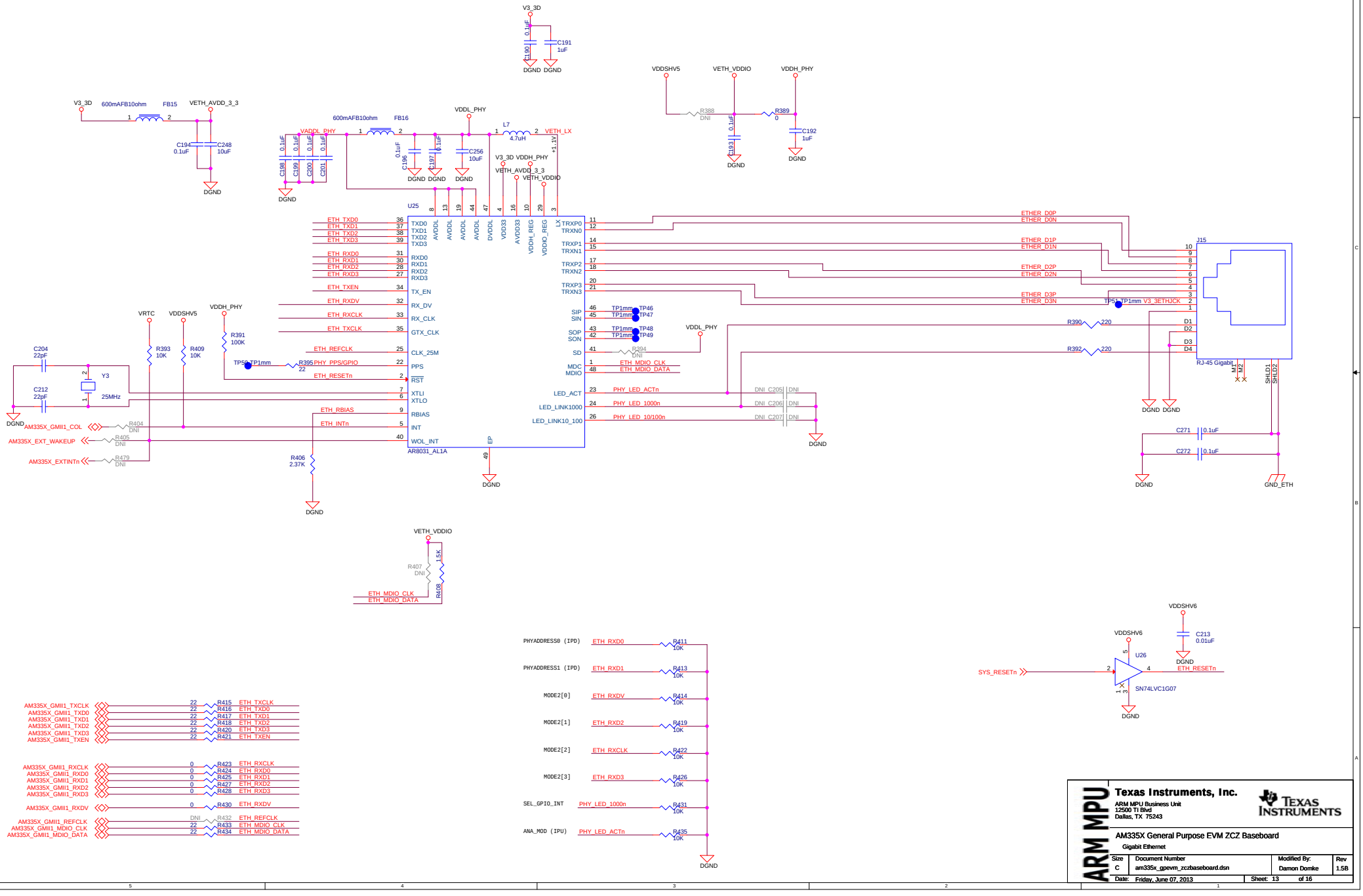
U25
AR8031_AL1A
J15
RJ-45 Gigabit
U26
SN74LVC1G07
ARM MPU
Texas Instruments, Inc.
ARM MPU Business Unit
12500 TI Blvd
Dallas, TX 75243
AM335X General Purpose EVM ZCZ Baseboard
Gigabit Ethernet
Size C
Document Number am335x_gpevm_zczbaseboard.dsn
Modified By: Damon Domke
Rev 1.5B
Date: Friday, June 07, 2013
Sheet: 13 of 16

MAVRK Connector

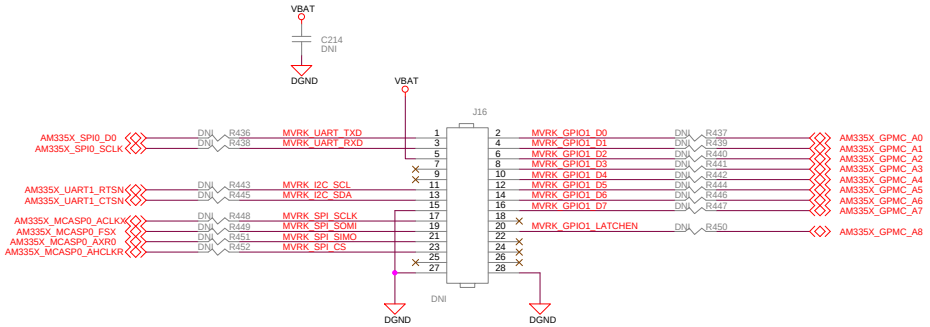

ARM MPU

Texas Instruments, Inc.

ARM MPU Business Unit
12500 TI Blvd
Dallas, TX 75243

TEXAS INSTRUMENTS

AM335X General Purpose EVM ZCZ Baseboard

Analog MAVRK Connector

Size	Document Number	Modified By:	Rev
C	am335x_gpevm_zczbaseboard.dsn	Damon Domke	1.5B

Date: Friday, June 07, 2013 Sheet: 14 of 16

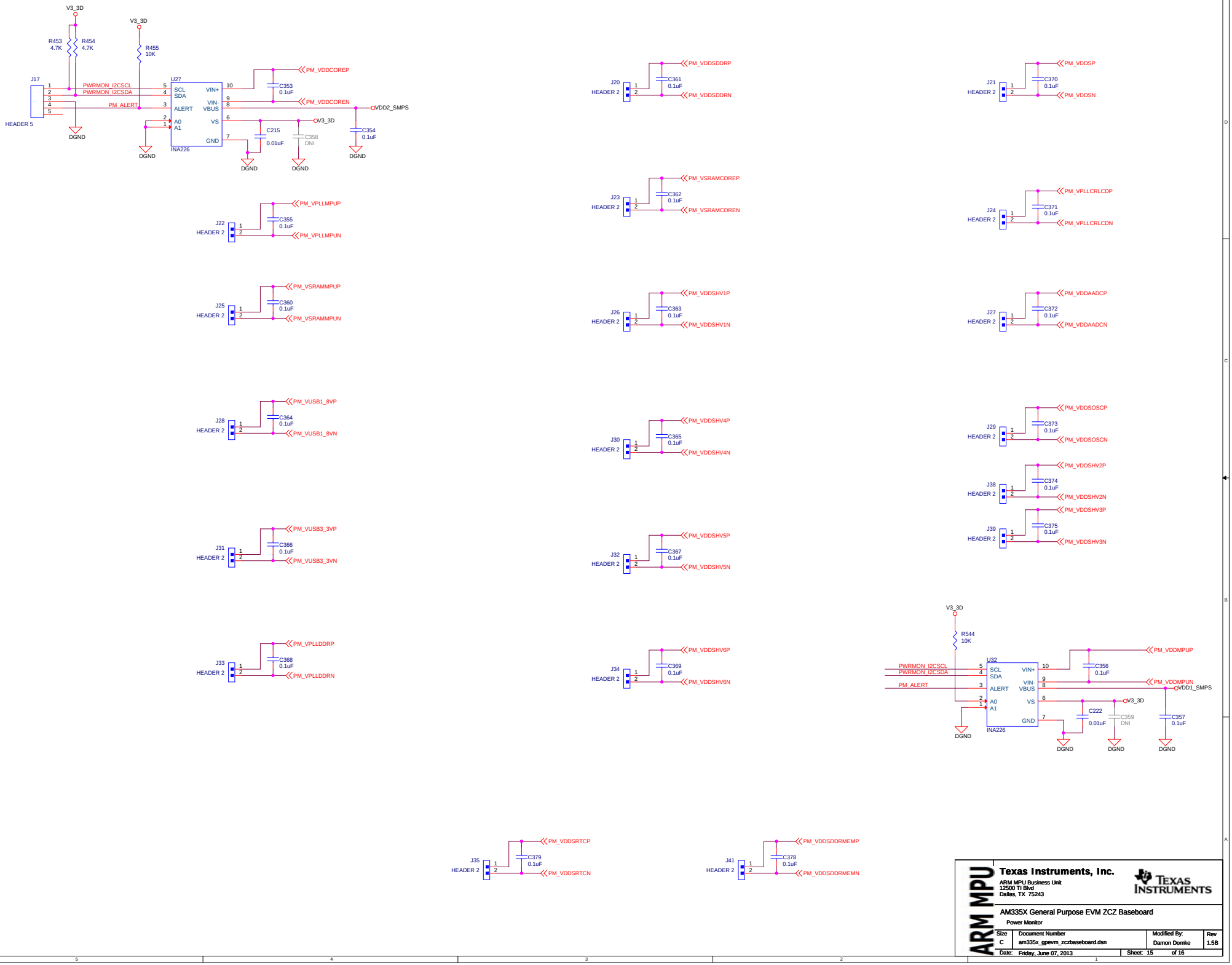
V3_3D
R453 4.7K
R454 4.7K
R455 10K
J17
HEADER 5
PWRMON_I2CSCL
PWRMON_I2CSDA
PM_ALERT
U27
SCL
SDA
ALERT
A0
A1
INA226
VIN+
VIN-
VBUS
VS
GND
C353 0.1uF
C215 0.01uF
C358 DNI
C354 0.1uF
PM_VDDCOREP
PM_VDDCOREN
VDD2_SMPS
V3_3D
DGND
J20 HEADER 2
C361 0.1uF
PM_VDDSDDRP
PM_VDDSDDRN
J21 HEADER 2
C370 0.1uF
PM_VDDSP
PM_VDDSN
J22 HEADER 2
C355 0.1uF
PM_VPLLMPUP
PM_VPLLMPUN
J23 HEADER 2
C362 0.1uF
PM_VSRAMCOREP
PM_VSRAMCOREN
J24 HEADER 2
C371 0.1uF
PM_VPLLCRLCDP
PM_VPLLCRLCDN
J25 HEADER 2
C360 0.1uF
PM_VSRAMMPUP
PM_VSRAMMPUN
J26 HEADER 2
C363 0.1uF
PM_VDDSHV1P
PM_VDDSHV1N
J27 HEADER 2
C372 0.1uF
PM_VDDAADCP
PM_VDDAADCN
J28 HEADER 2
C364 0.1uF
PM_VUSB1_8VP
PM_VUSB1_8VN
J30 HEADER 2
C365 0.1uF
PM_VDDSHV4P
PM_VDDSHV4N
J29 HEADER 2
C373 0.1uF
PM_VDDSOSCP
PM_VDDSOSCN
J38 HEADER 2
C374 0.1uF
PM_VDDSHV2P
PM_VDDSHV2N
J39 HEADER 2
C375 0.1uF
PM_VDDSHV3P
PM_VDDSHV3N
J31 HEADER 2
C366 0.1uF
PM_VUSB3_3VP
PM_VUSB3_3VN
J32 HEADER 2
C367 0.1uF
PM_VDDSHV5P
PM_VDDSHV5N
J33 HEADER 2
C368 0.1uF
PM_VPLLDDRP
PM_VPLLDDRN
J34 HEADER 2
C369 0.1uF
PM_VDDSHV6P
PM_VDDSHV6N
V3_3D
R544 10K
U32
PWRMON_I2CSCL
PWRMON_I2CSDA
PM_ALERT
SCL
SDA
ALERT
A0
A1
INA226
VIN+
VIN-
VBUS
VS
GND
C356 0.1uF
C222 0.01uF
C359 DNI
C357 0.1uF
PM_VDDMPUP
PM_VDDMPUN
VDD1_SMPS
V3_3D
DGND
J35 HEADER 2
C379 0.1uF
PM_VDDSRTCP
PM_VDDSRTCN
J41 HEADER 2
C378 0.1uF
PM_VDDSDDRMEMP
PM_VDDSDDRMEMN
ARM MPU
Texas Instruments, Inc.
ARM MPU Business Unit
12500 TI Blvd
Dallas, TX 75243
TEXAS INSTRUMENTS
AM335X General Purpose EVM ZCZ Baseboard
Power Monitor
Size C
Document Number am335x_gpevm_zczbaseboard.dsn
Modified By: Damon Domke
Rev 1.5B
Date: Friday, June 07, 2013
Sheet: 15 of 16

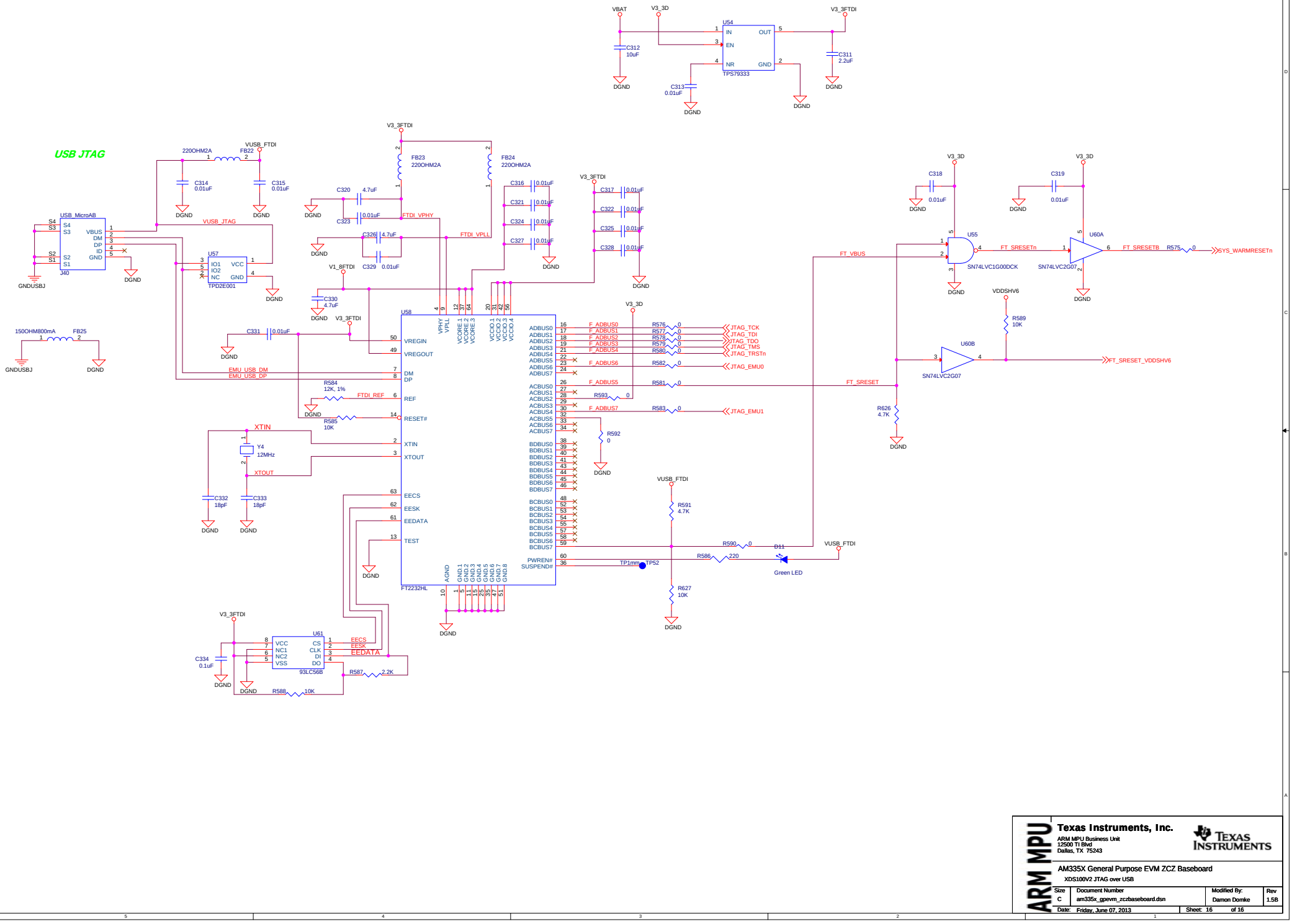

Texas Instruments, Inc.			
ARM MPU Business Unit 12500 TI Blvd Dallas, TX 75243			
AM335X General Purpose EVM ZCZ Baseboard			
XDS100V2 JTAG over USB			
Size: C	Document Number: am335x_gpevm_zczbaseboard.dsn	Modified By: Damon Domke	Rev: 1.5B
Date: Friday, June 07, 2013	Sheet: 16 of 16		