# ARM MPU AM3358 General Purpose EVM
# Base Board
# ZCZ Package

-See the Hardware User Guide for board details
-See the PCB Build Specification for PCB Details
-See the EVM Errata Document for Known Issues

PCB1

AM335x ZCZ Base Board Bare PCB

ARM MPU


**Texas Instruments, Inc.**
ARM MPU Business Unit
12500 TI Blvd
Dallas, TX 75243


TEXAS INSTRUMENTS

***Final***

AM3358 General Purpose EVM ZCZ Baseboard

Title Page

| Size | Document Number | Modified By: | Rev |
|---|---|---|---|
| C | am335x_gpevm_zczbaseboard.dsn | Damon Domke | 1.6A |

Date: Wednesday, August 27, 2014 Sheet: 1 of 16

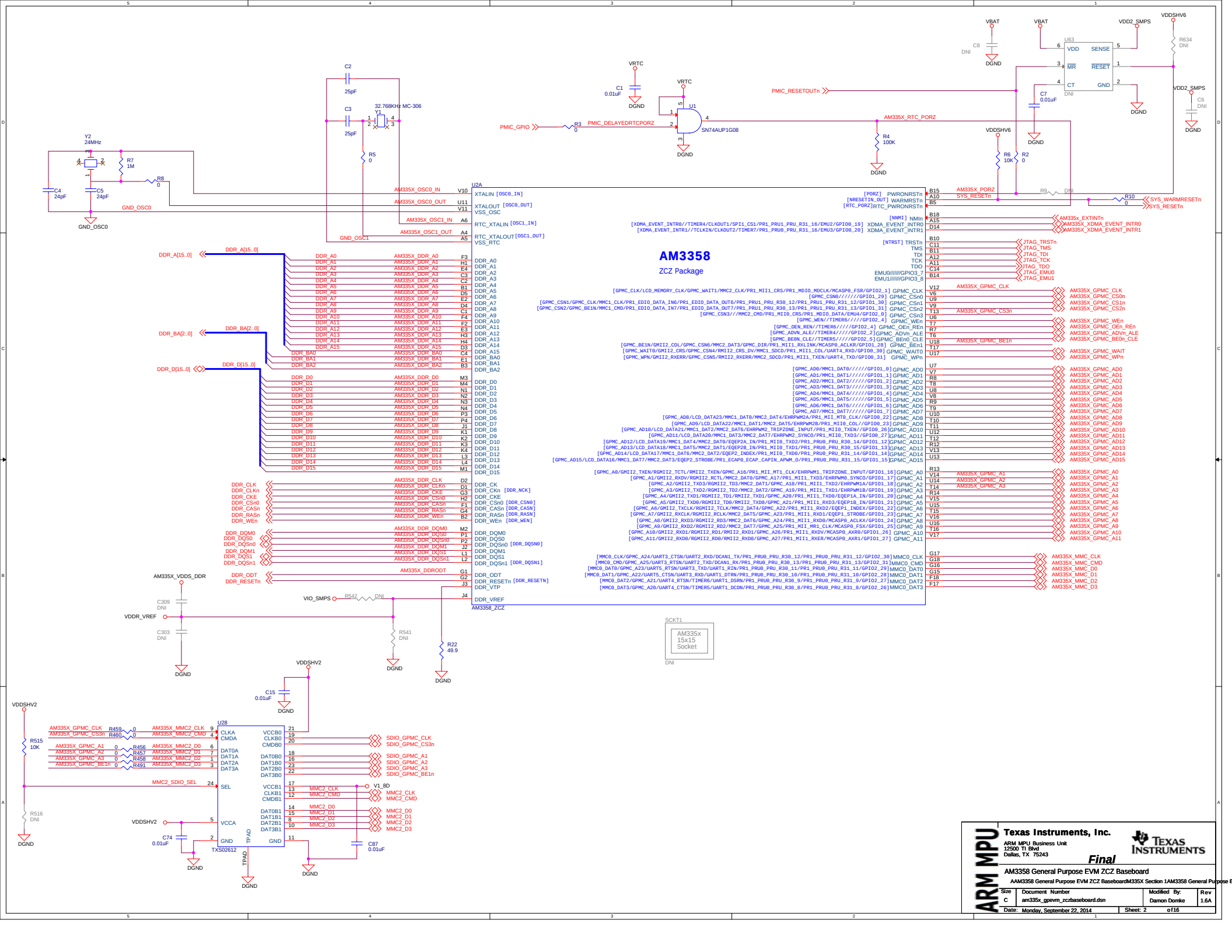
AM3358
ZCZ Package
U2A
AM3358_ZCZ
XTALIN [OSC0_IN]
XTALOUT [OSC0_OUT]
VSS_OSC
RTC_XTALIN [OSC1_IN]
RTC_XTALOUT [OSC1_OUT]
VSS_RTC
DDR_A0
DDR_A1
DDR_A2
DDR_A3
DDR_A4
DDR_A5
DDR_A6
DDR_A7
DDR_A8
DDR_A9
DDR_A10
DDR_A11
DDR_A12
DDR_A13
DDR_A14
DDR_A15
DDR_BA0
DDR_BA1
DDR_BA2
DDR_D0
DDR_D1
DDR_D2
DDR_D3
DDR_D4
DDR_D5
DDR_D6
DDR_D7
DDR_D8
DDR_D9
DDR_D10
DDR_D11
DDR_D12
DDR_D13
DDR_D14
DDR_D15
DDR_CK
DDR_CKn [DDR_NCK]
DDR_CKE
DDR_CSn0 [DDR_CSN0]
DDR_CASn [DDR_CASN]
DDR_RASn [DDR_RASN]
DDR_WEn [DDR_WEN]
DDR_DQM0
DDR_DQS0
DDR_DQSn0 [DDR_DQSN0]
DDR_DQM1
DDR_DQS1
DDR_DQSn1 [DDR_DQSN1]
DDR_ODT
DDR_RESETn [DDR_RESETN]
DDR_VTP
DDR_VREF
PWRONRSTn
WARMRSTn
RTC_PWRONRSTn
NMIn
XDMA_EVENT_INTR0
XDMA_EVENT_INTR1
TRSTn
TMS
TDI
TCK
TDO
EMU0/////GPIO3_7
EMU1/////GPIO3_8
GPMC_CLK
GPMC_CSn0
GPMC_CSn1
GPMC_CSn2
GPMC_CSn3
GPMC_WEn
GPMC_OEn_REn
GPMC_ADVn_ALE
GPMC_BE0n_CLE
GPMC_BE1n
GPMC_WAIT0
GPMC_WPn
GPMC_AD0
GPMC_AD1
GPMC_AD2
GPMC_AD3
GPMC_AD4
GPMC_AD5
GPMC_AD6
GPMC_AD7
GPMC_AD8
GPMC_AD9
GPMC_AD10
GPMC_AD11
GPMC_AD12
GPMC_AD13
GPMC_AD14
GPMC_AD15
GPMC_A0
GPMC_A1
GPMC_A2
GPMC_A3
GPMC_A4
GPMC_A5
GPMC_A6
GPMC_A7
GPMC_A8
GPMC_A9
GPMC_A10
GPMC_A11
MMC0_CLK
MMC0_CMD
MMC0_DAT0
MMC0_DAT1
MMC0_DAT2
MMC0_DAT3
AM335x 15x15 Socket
SCKT1
DNI
AM335X_OSC0_IN
AM335X_OSC0_OUT
AM335X_OSC1_IN
AM335X_OSC1_OUT
GND_OSC0
GND_OSC1
AM335X_DDR_A0
AM335X_DDR_A1
AM335X_DDR_A2
AM335X_DDR_A3
AM335X_DDR_A4
AM335X_DDR_A5
AM335X_DDR_A6
AM335X_DDR_A7
AM335X_DDR_A8
AM335X_DDR_A9
AM335X_DDR_A10
AM335X_DDR_A11
AM335X_DDR_A12
AM335X_DDR_A13
AM335X_DDR_A14
AM335X_DDR_A15
AM335X_DDR_BA0
AM335X_DDR_BA1
AM335X_DDR_BA2
AM335X_DDR_D0
AM335X_DDR_D1
AM335X_DDR_D2
AM335X_DDR_D3
AM335X_DDR_D4
AM335X_DDR_D5
AM335X_DDR_D6
AM335X_DDR_D7
AM335X_DDR_D8
AM335X_DDR_D9
AM335X_DDR_D10
AM335X_DDR_D11
AM335X_DDR_D12
AM335X_DDR_D13
AM335X_DDR_D14
AM335X_DDR_D15
AM335X_DDR_CLK
AM335X_DDR_CLKn
AM335X_DDR_CKE
AM335X_DDR_CSn0
AM335X_DDR_CASn
AM335X_DDR_RASn
AM335X_DDR_WEn
AM335X_DDR_DQM0
AM335X_DDR_DQS0
AM335X_DDR_DQSn0
AM335X_DDR_DQM1
AM335X_DDR_DQS1
AM335X_DDR_DQSn1
AM335X_DDRODT
DDR_A[15..0]
DDR_BA[2..0]
DDR_D[15..0]
PMIC_RESETOUTn
PMIC_GPIO
PMIC_DELAYEDRTCPORZ
AM335X_RTC_PORZ
SN74AUP1G08
AM335X_PORZ
SYS_RESETn
SYS_WARMRESETn
AM335x_EXTINTn
AM335X_XDMA_EVENT_INTR0
AM335X_XDMA_EVENT_INTR1
JTAG_TRSTn
JTAG_TMS
JTAG_TDI
JTAG_TCK
JTAG_TDO
JTAG_EMU0
JTAG_EMU1
AM335X_GPMC_CLK
AM335X_GPMC_CS0n
AM335X_GPMC_CS1n
AM335X_GPMC_CS2n
AM335X_GPMC_CS3n
AM335X_GPMC_WEn
AM335X_GPMC_OEn_REn
AM335X_GPMC_ADVn_ALE
AM335X_GPMC_BE0n_CLE
AM335X_GPMC_BE1n
AM335X_GPMC_WAIT
AM335X_GPMC_WPn
AM335X_GPMC_AD0
AM335X_GPMC_AD1
AM335X_GPMC_AD2
AM335X_GPMC_AD3
AM335X_GPMC_AD4
AM335X_GPMC_AD5
AM335X_GPMC_AD6
AM335X_GPMC_AD7
AM335X_GPMC_AD8
AM335X_GPMC_AD9
AM335X_GPMC_AD10
AM335X_GPMC_AD11
AM335X_GPMC_AD12
AM335X_GPMC_AD13
AM335X_GPMC_AD14
AM335X_GPMC_AD15
AM335X_GPMC_A0
AM335X_GPMC_A1
AM335X_GPMC_A2
AM335X_GPMC_A3
AM335X_GPMC_A4
AM335X_GPMC_A5
AM335X_GPMC_A6
AM335X_GPMC_A7
AM335X_GPMC_A8
AM335X_GPMC_A9
AM335X_GPMC_A10
AM335X_GPMC_A11
AM335X_MMC_CLK
AM335X_MMC_CMD
AM335X_MMC_D0
AM335X_MMC_D1
AM335X_MMC_D2
AM335X_MMC_D3
VDDSHV6
VDD2_SMPS
VBAT
VRTC
VDDR_VREF
VIO_SMPS
AM335X_VDDS_DDR
U63
U1
U28
TXS02612
SDIO_GPMC_CLK
SDIO_GPMC_CS3n
SDIO_GPMC_A1
SDIO_GPMC_A2
SDIO_GPMC_A3
SDIO_GPMC_BE1n
MMC2_CLK
MMC2_CMD
MMC2_D0
MMC2_D1
MMC2_D2
MMC2_D3
MMC2_SDIO_SEL
V1_8D
32.768KHz MC-306
Y1
Y2
24MHz
R7 1M
R8 0
R5 0
R3 0
R4 100K
R6 10K
R2 0
R9 DNI
R10 0
R634 DNI
R515 10K
R516 DNI
R541 DNI
R22 49.9
C1 0.01uF
C2 25pF
C3 25pF
C4 24pF
C5 24pF
C6 DNI
C7 0.01uF
C8 DNI
C15 0.01uF
C74 0.01uF
C87 0.01uF
C303 DNI
C309 DNI
Texas Instruments, Inc.
ARM MPU Business Unit
12500 TI Blvd
Dallas, TX 75243
Final
AM3358 General Purpose EVM ZCZ Baseboard
AAM3358 General Purpose EVM ZCZ BaseboardM335X Section 1AM3358 General Purpose E
Size C
Document Number am335x_gpevm_zczbaseboard.dsn
Modified By: Damon Domke
Rev 1.6A
Date: Monday, September 22, 2014
Sheet: 2 of 16

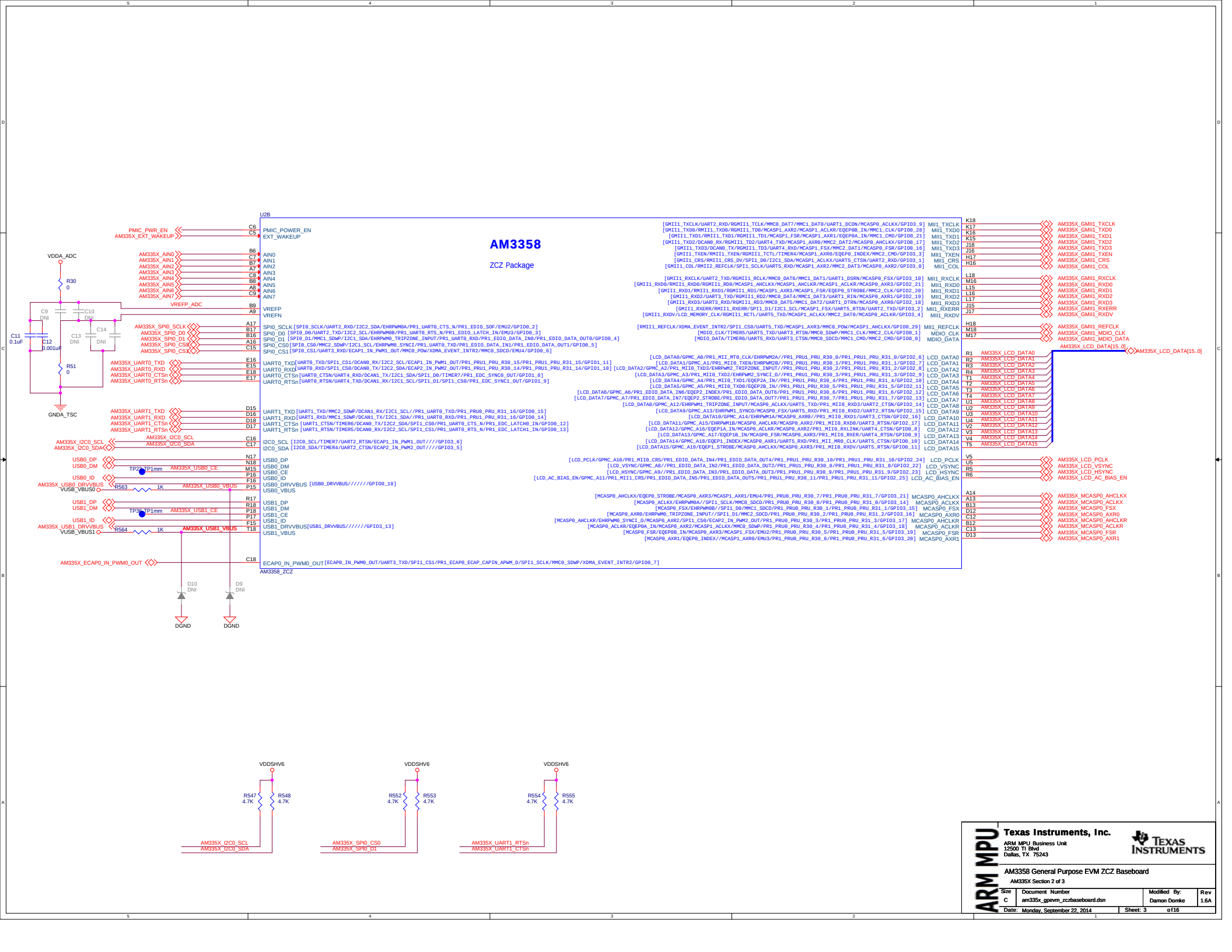
U2B
AM3358
ZCZ Package
AM3358_ZCZ
PMIC_PWR_EN
AM335X_EXT_WAKEUP
PMIC_POWER_EN
EXT_WAKEUP
VDDA_ADC
R30
0
C9
DNI
C10
DNI
C11
0.1uF
C12
0.001uF
C13
DNI
C14
DNI
R51
0
GNDA_TSC
VREFP_ADC
VREFP
VREFN
AM335X_AIN0
AM335X_AIN1
AM335X_AIN2
AM335X_AIN3
AM335X_AIN4
AM335X_AIN5
AM335X_AIN6
AM335X_AIN7
AIN0
AIN1
AIN2
AIN3
AIN4
AIN5
AIN6
AIN7
AM335X_SPI0_SCLK
AM335X_SPI0_D0
AM335X_SPI0_D1
AM335X_SPI0_CS0
AM335X_SPI0_CS1
SPI0_SCLK [SPI0_SCLK/UART2_RXD/I2C2_SDA/EHRPWM0A/PR1_UART0_CTS_N/PR1_EDIO_SOF/EMU2/GPIO0_2]
SPI0_D0 [SPI0_D0/UART2_TXD/I2C2_SCL/EHRPWM0B/PR1_UART0_RTS_N/PR1_EDIO_LATCH_IN/EMU3/GPIO0_3]
SPI0_D1 [SPI0_D1/MMC1_SDWP/I2C1_SDA/EHRPWM0_TRIPZONE_INPUT/PR1_UART0_RXD/PR1_EDIO_DATA_IN0/PR1_EDIO_DATA_OUT0/GPIO0_4]
SPI0_CS0 [SPI0_CS0/MMC2_SDWP/I2C1_SCL/EHRPWM0_SYNCI/PR1_UART0_TXD/PR1_EDIO_DATA_IN1/PR1_EDIO_DATA_OUT1/GPIO0_5]
SPI0_CS1 [SPI0_CS1/UART3_RXD/ECAP1_IN_PWM1_OUT/MMC0_POW/XDMA_EVENT_INTR2/MMC0_SDCD/EMU4/GPIO0_6]
AM335X_UART0_TXD
AM335X_UART0_RXD
AM335X_UART0_CTSn
AM335X_UART0_RTSn
UART0_TXD [UART0_TXD/SPI1_CS1/DCAN0_RX/I2C2_SCL/ECAP1_IN_PWM1_OUT/PR1_PRU1_PRU_R30_15/PR1_PRU1_PRU_R31_15/GPIO1_11]
UART0_RXD [UART0_RXD/SPI1_CS0/DCAN0_TX/I2C2_SDA/ECAP2_IN_PWM2_OUT/PR1_PRU1_PRU_R30_14/PR1_PRU1_PRU_R31_14/GPIO1_10]
UART0_CTSn [UART0_CTSN/UART4_RXD/DCAN1_TX/I2C1_SDA/SPI1_D0/TIMER7/PR1_EDC_SYNC0_OUT/GPIO1_8]
UART0_RTSn [UART0_RTSN/UART4_TXD/DCAN1_RX/I2C1_SCL/SPI1_D1/SPI1_CS0/PR1_EDC_SYNC1_OUT/GPIO1_9]
AM335X_UART1_TXD
AM335X_UART1_RXD
AM335X_UART1_CTSn
AM335X_UART1_RTSn
UART1_TXD [UART1_TXD/MMC2_SDWP/DCAN1_RX/I2C1_SCL//PR1_UART0_TXD/PR1_PRU0_PRU_R31_16/GPIO0_15]
UART1_RXD [UART1_RXD/MMC1_SDWP/DCAN1_TX/I2C1_SDA//PR1_UART0_RXD/PR1_PRU1_PRU_R31_16/GPIO0_14]
UART1_CTSn [UART1_CTSN/TIMER5/DCAN0_TX/I2C2_SDA/SPI1_CS0/PR1_UART0_CTS_N/PR1_EDC_LATCH0_IN/GPIO0_12]
UART1_RTSn [UART1_RTSN/TIMER5/DCAN0_RX/I2C2_SCL/SPI1_CS1/PR1_UART0_RTS_N/PR1_EDC_LATCH1_IN/GPIO0_13]
AM335X_I2C0_SCL
AM335X_I2C0_SDA
I2C0_SCL [I2C0_SCL/TIMER7/UART2_RTSN/ECAP1_IN_PWM1_OUT////GPIO3_6]
I2C0_SDA [I2C0_SDA/TIMER4/UART2_CTSN/ECAP2_IN_PWM2_OUT////GPIO3_5]
USB0_DP
USB0_DM
USB0_ID
AM335X_USB0_DRVVBUS
VUSB_VBUS0
R563
1K
TP2
TP1mm
AM335X_USB0_CE
AM335X_USB0_VBUS
USB0_DP
USB0_DM
USB0_CE
USB0_ID
USB0_DRVVBUS [USB0_DRVVBUS//////GPIO0_18]
USB0_VBUS
USB1_DP
USB1_DM
USB1_ID
AM335X_USB1_DRVVBUS
VUSB_VBUS1
R564
1K
TP3
TP1mm
AM335X_USB1_CE
AM335X_USB1_VBUS
USB1_DP
USB1_DM
USB1_CE
USB1_ID
USB1_DRVVBUS [USB1_DRVVBUS//////GPIO3_13]
USB1_VBUS
AM335X_ECAP0_IN_PWM0_OUT
ECAP0_IN_PWM0_OUT [ECAP0_IN_PWM0_OUT/UART3_TXD/SPI1_CS1/PR1_ECAP0_ECAP_CAPIN_APWM_O/SPI1_SCLK/MMC0_SDWP/XDMA_EVENT_INTR2/GPIO0_7]
D10
DNI
D9
DNI
DGND
DGND
[GMII1_TXCLK/UART2_RXD/RGMII1_TCLK/MMC0_DAT7/MMC1_DAT0/UART1_DCDN/MCASP0_ACLKX/GPIO3_9] MII1_TXCLK
[GMII1_TXD0/RMII1_TXD0/RGMII1_TD0/MCASP1_AXR2/MCASP1_ACLKR/EQEP0B_IN/MMC1_CLK/GPIO0_20] MII1_TXD0
[GMII1_TXD1/RMII1_TXD1/RGMII1_TD1/MCASP1_FSR/MCASP1_AXR1/EQEP0A_IN/MMC1_CMD/GPIO0_21] MII1_TXD1
[GMII1_TXD2/DCAN0_RX/RGMII1_TD2/UART4_TXD/MCASP1_AXR0/MMC2_DAT2/MCASP0_AHCLKX/GPIO0_17] MII1_TXD2
[GMII1_TXD3/DCAN0_TX/RGMII1_TD3/UART4_RXD/MCASP1_FSX/MMC2_DAT1/MCASP0_FSR/GPIO0_16] MII1_TXD3
[GMII1_TXEN/RMII1_TXEN/RGMII1_TCTL/TIMER4/MCASP1_AXR0/EQEP0_INDEX/MMC2_CMD/GPIO3_3] MII1_TXEN
[GMII1_CRS/RMII1_CRS_DV/SPI1_D1/I2C1_SCL/MCASP1_FSX/UART5_RTSN/UART2_RXD/GPIO3_1] MII1_CRS
[GMII1_RXDV/LCD_MEMORY_CLK/RGMII1_RCTL/UART5_TXD/MCASP1_ACLKX/MMC2_DAT0/MCASP0_ACLKR/GPIO3_4] MII1_RXDV
[GMII1_RXCLK/UART2_TXD/RGMII1_RCLK/MMC0_DAT6/MMC1_DAT1/UART1_DSRN/MCASP0_FSX/GPIO3_10] MII1_RXCLK
[GMII1_RXD0/RMII1_RXD0/RGMII1_RD0/MCASP1_AHCLKX/MCASP1_ACLKR/MCASP0_AXR3/GPIO2_21] MII1_RXD0
[GMII1_RXD1/RMII1_RXD1/RGMII1_RD1/MCASP1_AXR3/MCASP1_FSR/EQEP0_STROBE/MMC2_CLK/GPIO2_20] MII1_RXD1
[GMII1_RXD2/UART3_TXD/RGMII1_RD2/MMC0_DAT4/MMC1_DAT3/UART1_RIN/MCASP0_AXR1/GPIO2_19] MII1_RXD2
[GMII1_RXD3/UART3_RXD/RGMII1_RD3/MMC0_DAT5/MMC1_DAT2/UART1_DTRN/MCASP0_AXR0/GPIO2_18] MII1_RXD3
[GMII1_RXERR/RMII1_RXER/SPI1_D1/I2C1_SCL/MCASP1_FSX/UART5_RTSN/UART2_TXD/GPIO3_2] MII1_RXERR
[RMII1_REFCLK/XDMA_EVENT_INTR2/SPI1_CS0/UART5_TXD/MCASP1_AXR3/MMC0_POW/MCASP1_AHCLKX/GPIO0_29] MII1_REFCLK
[MDIO_CLK/TIMER5/UART5_TXD/UART3_RTSN/MMC0_SDWP/MMC1_CLK/MMC2_CLK/GPIO0_1] MDIO_CLK
[MDIO_DATA/TIMER6/UART5_RXD/UART3_CTSN/MMC0_SDCD/MMC1_CMD/MMC2_CMD/GPIO0_0] MDIO_DATA
[LCD_DATA0/GPMC_A0/PR1_MII_MT0_CLK/EHRPWM2A//PR1_PRU1_PRU_R30_0/PR1_PRU1_PRU_R31_0/GPIO2_6] LCD_DATA0
[LCD_DATA1/GPMC_A1/PR1_MII0_TXEN/EHRPWM2B//PR1_PRU1_PRU_R30_1/PR1_PRU1_PRU_R31_1/GPIO2_7] LCD_DATA1
[LCD_DATA2/GPMC_A2/PR1_MII0_TXD3/EHRPWM2_TRIPZONE_INPUT//PR1_PRU1_PRU_R30_2/PR1_PRU1_PRU_R31_2/GPIO2_8] LCD_DATA2
[LCD_DATA3/GPMC_A3/PR1_MII0_TXD2/EHRPWM2_SYNCI_O//PR1_PRU1_PRU_R30_3/PR1_PRU1_PRU_R31_3/GPIO2_9] LCD_DATA3
[LCD_DATA4/GPMC_A4/PR1_MII0_TXD1/EQEP2A_IN//PR1_PRU1_PRU_R30_4/PR1_PRU1_PRU_R31_4/GPIO2_10] LCD_DATA4
[LCD_DATA5/GPMC_A5/PR1_MII0_TXD0/EQEP2B_IN//PR1_PRU1_PRU_R30_5/PR1_PRU1_PRU_R31_5/GPIO2_11] LCD_DATA5
[LCD_DATA6/GPMC_A6/PR1_EDIO_DATA_IN6/EQEP2_INDEX/PR1_EDIO_DATA_OUT6/PR1_PRU1_PRU_R30_6/PR1_PRU1_PRU_R31_6/GPIO2_12] LCD_DATA6
[LCD_DATA7/GPMC_A7/PR1_EDIO_DATA_IN7/EQEP2_STROBE/PR1_EDIO_DATA_OUT7/PR1_PRU1_PRU_R30_7/PR1_PRU1_PRU_R31_7/GPIO2_13] LCD_DATA7
[LCD_DATA8/GPMC_A12/EHRPWM1_TRIPZONE_INPUT/MCASP0_ACLKX/UART5_TXD/PR1_MII0_RXD3/UART2_CTSN/GPIO2_14] LCD_DATA8
[LCD_DATA9/GPMC_A13/EHRPWM1_SYNCO/MCASP0_FSX/UART5_RXD/PR1_MII0_RXD2/UART2_RTSN/GPIO2_15] LCD_DATA9
[LCD_DATA10/GPMC_A14/EHRPWM1A/MCASP0_AXR0//PR1_MII0_RXD1/UART3_CTSN/GPIO2_16] LCD_DATA10
[LCD_DATA11/GPMC_A15/EHRPWM1B/MCASP0_AHCLKR/MCASP0_AXR2/PR1_MII0_RXD0/UART3_RTSN/GPIO2_17] LCD_DATA11
[LCD_DATA12/GPMC_A16/EQEP1A_IN/MCASP0_ACLKR/MCASP0_AXR2/PR1_MII0_RXLINK/UART4_CTSN/GPIO0_8] LCD_DATA12
[LCD_DATA13/GPMC_A17/EQEP1B_IN/MCASP0_FSR/MCASP0_AXR3/PR1_MII0_RXER/UART4_RTSN/GPIO0_9] LCD_DATA13
[LCD_DATA14/GPMC_A18/EQEP1_INDEX/MCASP0_AXR1/UART5_RXD/PR1_MII_MR0_CLK/UART5_CTSN/GPIO0_10] LCD_DATA14
[LCD_DATA15/GPMC_A19/EQEP1_STROBE/MCASP0_AHCLKX/MCASP0_AXR3/PR1_MII0_RXDV/UART5_RTSN/GPIO0_11] LCD_DATA15
[LCD_PCLK/GPMC_A10/PR1_MII0_CRS/PR1_EDIO_DATA_IN4/PR1_EDIO_DATA_OUT4/PR1_PRU1_PRU_R30_10/PR1_PRU1_PRU_R31_10/GPIO2_24] LCD_PCLK
[LCD_VSYNC/GPMC_A8//PR1_EDIO_DATA_IN2/PR1_EDIO_DATA_OUT2/PR1_PRU1_PRU_R30_8/PR1_PRU1_PRU_R31_8/GPIO2_22] LCD_VSYNC
[LCD_HSYNC/GPMC_A9//PR1_EDIO_DATA_IN3/PR1_EDIO_DATA_OUT3/PR1_PRU1_PRU_R30_9/PR1_PRU1_PRU_R31_9/GPIO2_23] LCD_HSYNC
[LCD_AC_BIAS_EN/GPMC_A11/PR1_MII1_CRS/PR1_EDIO_DATA_IN5/PR1_EDIO_DATA_OUT5/PR1_PRU1_PRU_R30_11/PR1_PRU1_PRU_R31_11/GPIO2_25] LCD_AC_BIAS_EN
[MCASP0_AHCLKX/EQEP0_STROBE/MCASP0_AXR3/MCASP1_AXR1/EMU4/PR1_PRU0_PRU_R30_7/PR1_PRU0_PRU_R31_7/GPIO3_21] MCASP0_AHCLKX
[MCASP0_ACLKX/EHRPWM0A//SPI1_SCLK/MMC0_SDCD/PR1_PRU0_PRU_R30_0/PR1_PRU0_PRU_R31_0/GPIO3_14] MCASP0_ACLKX
[MCASP0_FSX/EHRPWM0B//SPI1_D0/MMC1_SDCD/PR1_PRU0_PRU_R30_1/PR1_PRU0_PRU_R31_1/GPIO3_15] MCASP0_FSX
[MCASP0_AXR0/EHRPWM0_TRIPZONE_INPUT//SPI1_D1/MMC2_SDCD/PR1_PRU0_PRU_R30_2/PR1_PRU0_PRU_R31_2/GPIO3_16] MCASP0_AXR0
[MCASP0_AHCLKR/EHRPWM0_SYNCI_O/MCASP0_AXR2/SPI1_CS0/ECAP2_IN_PWM2_OUT/PR1_PRU0_PRU_R30_3/PR1_PRU0_PRU_R31_3/GPIO3_17] MCASP0_AHCLKR
[MCASP0_ACLKR/EQEP0A_IN/MCASP0_AXR2/MCASP1_ACLKX/MMC0_SDWP/PR1_PRU0_PRU_R30_4/PR1_PRU0_PRU_R31_4/GPIO3_18] MCASP0_ACLKR
[MCASP0_FSR/EQEP0B_IN/MCASP0_AXR3/MCASP1_FSX/EMU2/PR1_PRU0_PRU_R30_5/PR1_PRU0_PRU_R31_5/GPIO3_19] MCASP0_FSR
[MCASP0_AXR1/EQEP0_INDEX//MCASP1_AXR0/EMU3/PR1_PRU0_PRU_R30_6/PR1_PRU0_PRU_R31_6/GPIO3_20] MCASP0_AXR1
AM335X_LCD_DATA[15..0]
AM335X_LCD_DATA[15..0]
AM335X_GMII1_TXCLK
AM335X_GMII1_TXD0
AM335X_GMII1_TXD1
AM335X_GMII1_TXD2
AM335X_GMII1_TXD3
AM335X_GMII1_TXEN
AM335X_GMII1_CRS
AM335X_GMII1_COL
AM335X_GMII1_RXCLK
AM335X_GMII1_RXD0
AM335X_GMII1_RXD1
AM335X_GMII1_RXD2
AM335X_GMII1_RXD3
AM335X_GMII1_RXERR
AM335X_GMII1_RXDV
AM335X_GMII1_REFCLK
AM335X_GMII1_MDIO_CLK
AM335X_GMII1_MDIO_DATA
AM335X_LCD_DATA0
AM335X_LCD_DATA1
AM335X_LCD_DATA2
AM335X_LCD_DATA3
AM335X_LCD_DATA4
AM335X_LCD_DATA5
AM335X_LCD_DATA6
AM335X_LCD_DATA7
AM335X_LCD_DATA8
AM335X_LCD_DATA9
AM335X_LCD_DATA10
AM335X_LCD_DATA11
AM335X_LCD_DATA12
AM335X_LCD_DATA13
AM335X_LCD_DATA14
AM335X_LCD_DATA15
AM335X_LCD_PCLK
AM335X_LCD_VSYNC
AM335X_LCD_HSYNC
AM335X_LCD_AC_BIAS_EN
AM335X_MCASP0_AHCLKX
AM335X_MCASP0_ACLKX
AM335X_MCASP0_FSX
AM335X_MCASP0_AXR0
AM335X_MCASP0_AHCLKR
AM335X_MCASP0_ACLKR
AM335X_MCASP0_FSR
AM335X_MCASP0_AXR1
VDDSHV6
R547
4.7K
R548
4.7K
AM335X_I2C0_SCL
AM335X_I2C0_SDA
VDDSHV6
R552
4.7K
R553
4.7K
AM335X_SPI0_CS0
AM335X_SPI0_D1
VDDSHV6
R554
4.7K
R555
4.7K
AM335X_UART1_RTSn
AM335X_UART1_CTSn
ARM MPU
Texas Instruments, Inc.
ARM MPU Business Unit
12500 TI Blvd
Dallas, TX 75243
AM3358 General Purpose EVM ZCZ Baseboard
AM335X Section 2 of 3
Size C
Document Number am335x_gpevm_zczbaseboard.dsn
Modified By: Damon Domke
Rev 1.6A
Date: Monday, September 22, 2014
Sheet: 3 of 16

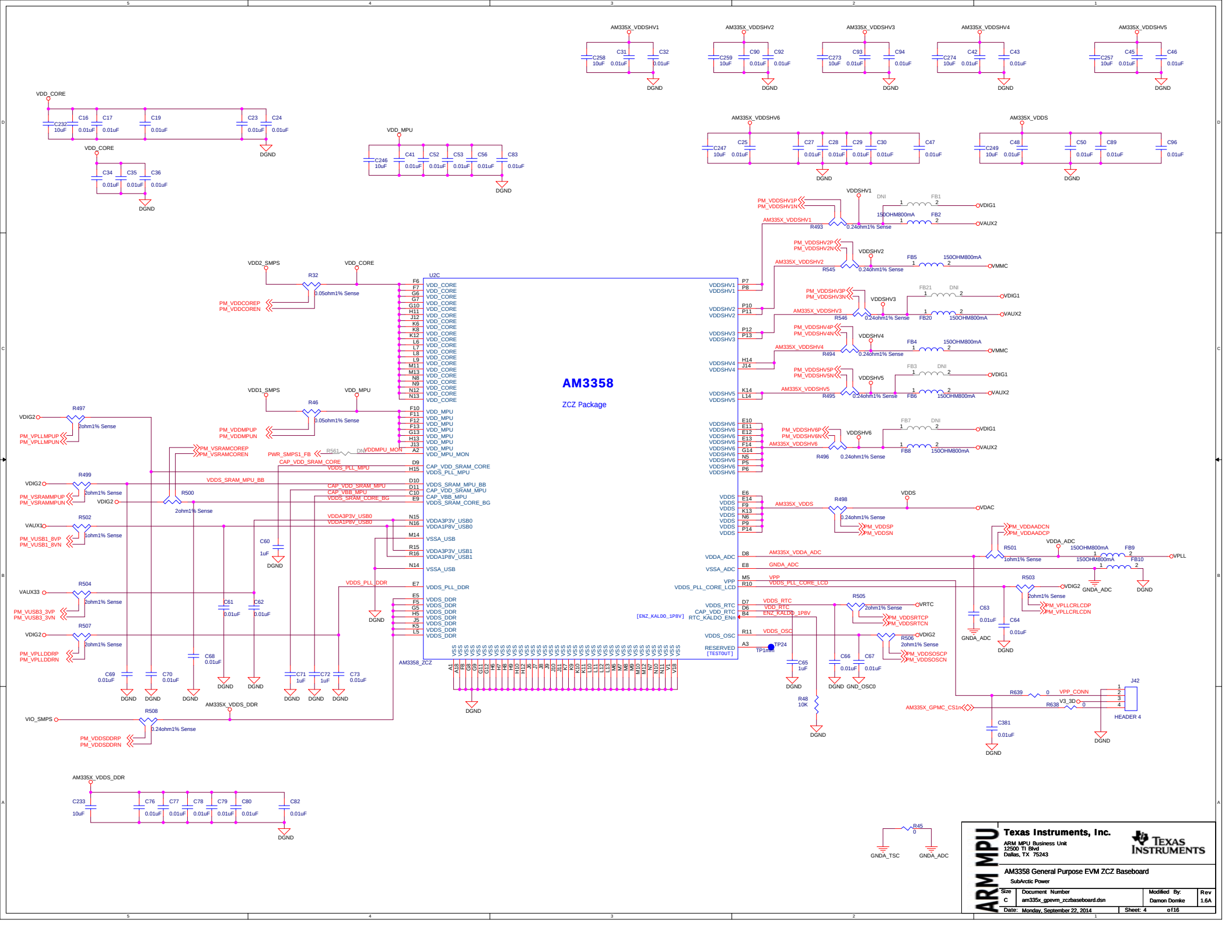


**Texas Instruments, Inc.**
ARM MPU Business Unit
12500 TI Blvd
Dallas, TX 75243

TEXAS INSTRUMENTS

ARM MPU

**AM3358 General Purpose EVM ZCZ Baseboard**
SubArctic Power

| Size | Document Number | Modified By: | Rev |
|---|---|---|---|
| C | am335x_gpevm_zczbaseboard.dsn | Damon Domke | 1.6A |

Date: Monday, September 22, 2014 Sheet: 4 of 16

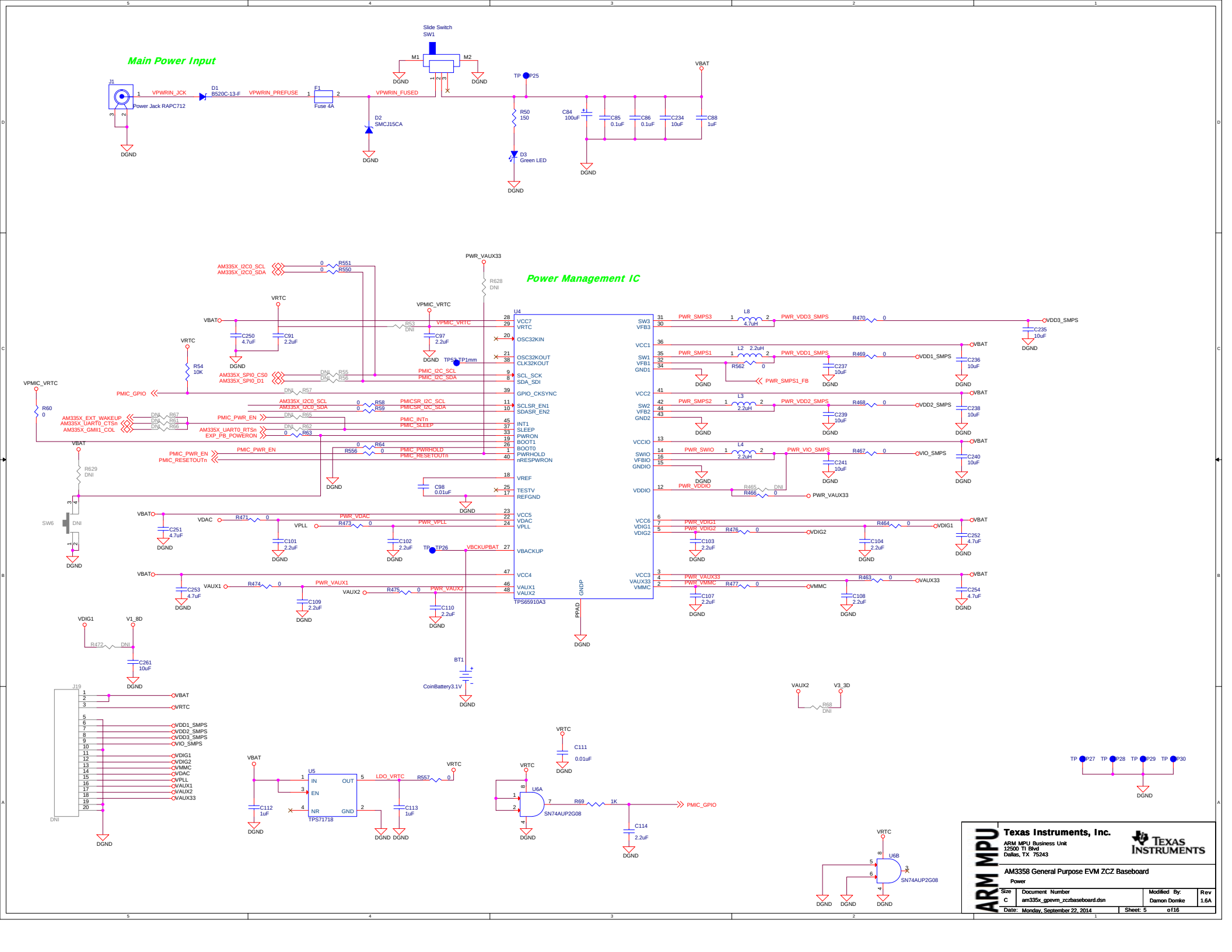
Main Power Input
Slide Switch
SW1
Power Jack RAPC712
B520C-13-F
Fuse 4A
SMCJ15CA
Green LED
Power Management IC
TPS65910A3
TPS71718
SN74AUP2G08
CoinBattery3.1V
ARM MPU
Texas Instruments, Inc.
ARM MPU Business Unit
12500 TI Blvd
Dallas, TX 75243
AM3358 General Purpose EVM ZCZ Baseboard
Power
Size C
Document Number am335x_gpevm_zczbaseboard.dsn
Modified By: Damon Domke
Rev 1.6A
Date: Monday, September 22, 2014
Sheet: 5 of 16

## ID Memory

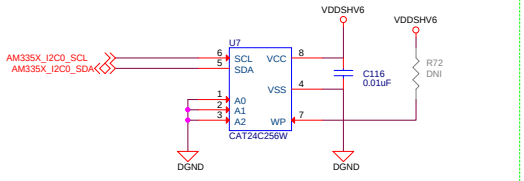


## JTAG Connector

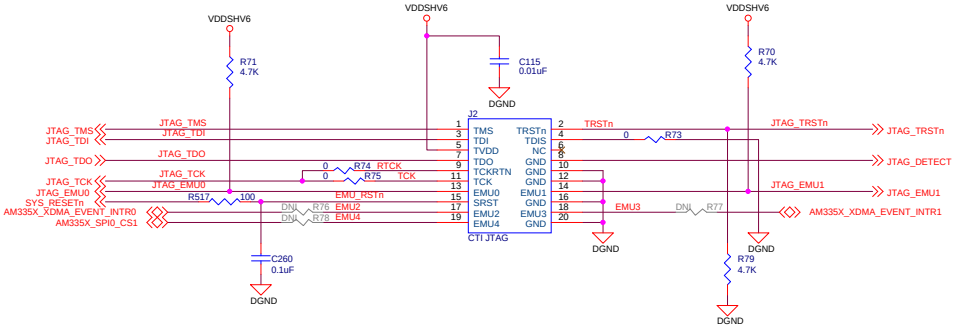


## User LED's

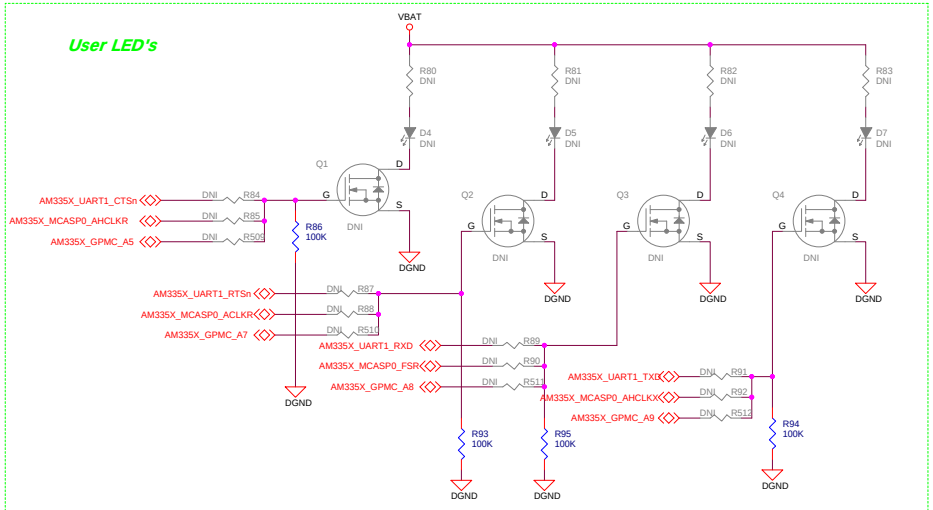


## Clockout Measurement Testpoints

## ADC Test

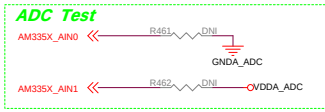


## User Reset/Interrupt Switches

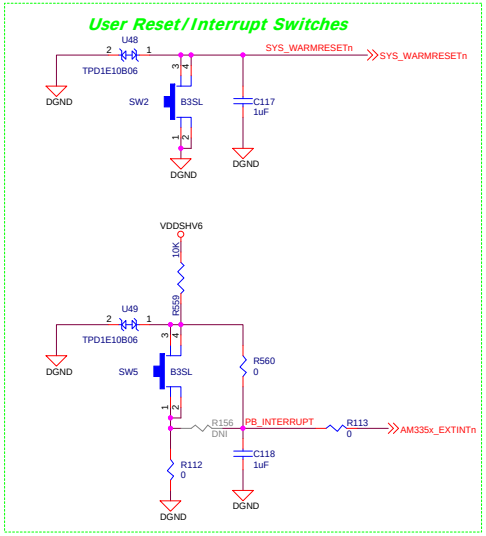


## Boot Configuration

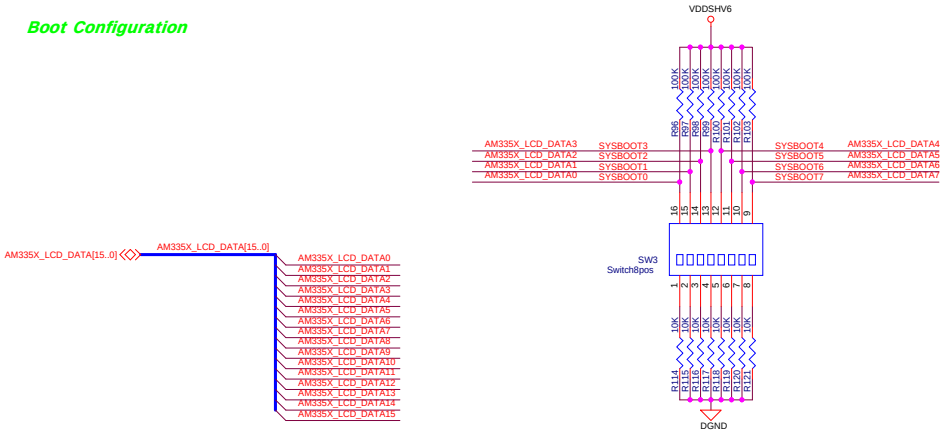





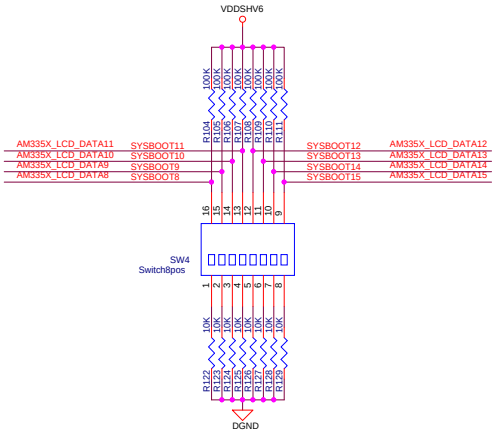


| | | | |
|---|---|---|---|
| ARM MPU | **Texas Instruments, Inc.**<br>ARM MPU Business Unit<br>12500 TI Blvd<br>Dallas, TX 75243 | | |
| | AM3358 General Purpose EVM ZCZ Baseboard<br>Debug/Configuration | | |
| | Size: C | Document Number: am335x_gpevm_zczbaseboard.dsn | Modified By: Damon Domke / Rev: 1.6A |
| | Date: Monday, September 22, 2014 | Sheet: 6 of 16 | |

## DDR3 SDRAM

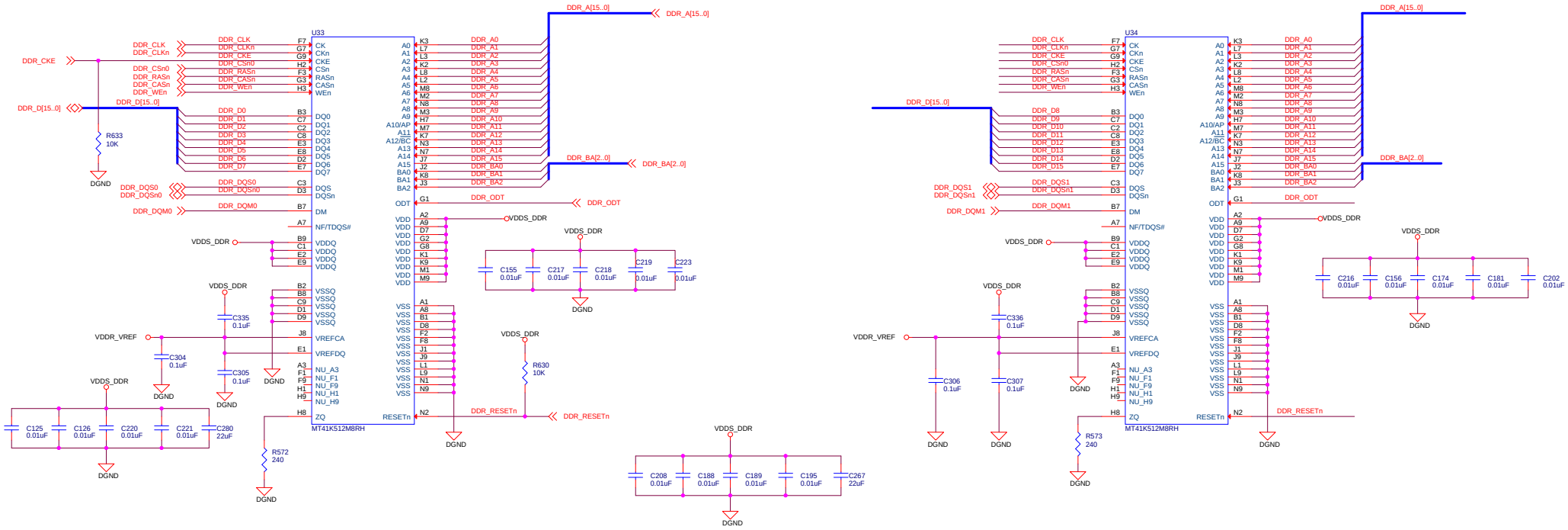


## NAND Memory

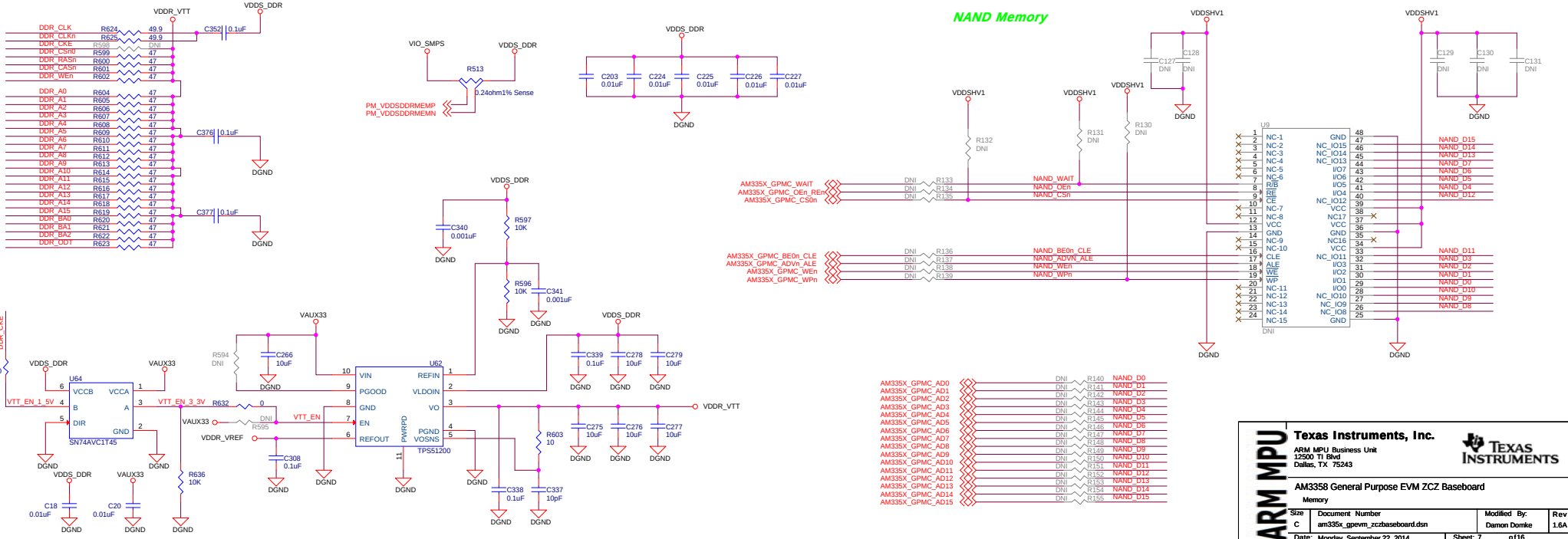


| | |
|---|---|
| **Texas Instruments, Inc.** | |
| ARM MPU Business Unit | |
| 12500 TI Blvd | |
| Dallas, TX 75243 | |
| **AM3358 General Purpose EVM ZCZ Baseboard** | |
| Memory | |
| Size: C | Document Number: am335x_gpevm_zczbaseboard.dsn |
| Modified By: Damon Domke | Rev: 1.6A |
| Date: Monday, September 22, 2014 | Sheet: 7 of 16 |

## Expansion Connector - EXP0

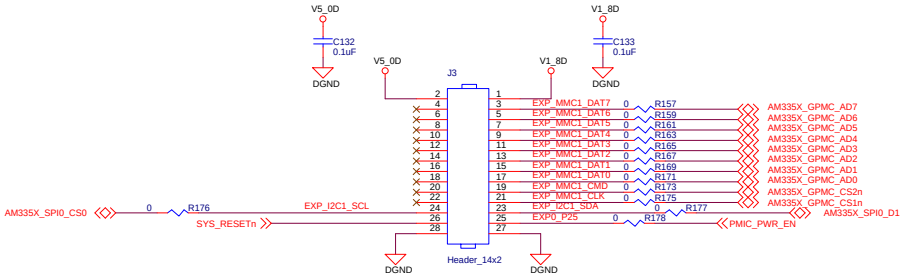


## Expansion Connector - EXP1

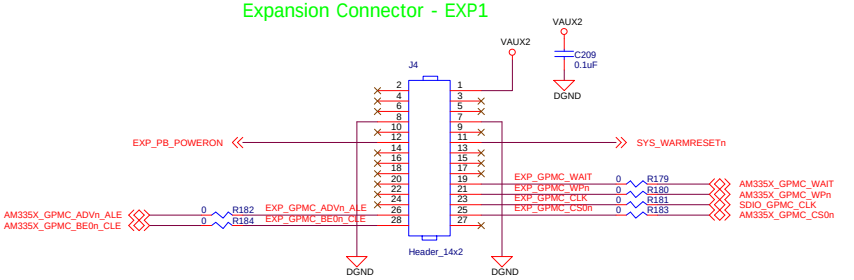


## Expansion Connector - EXP2

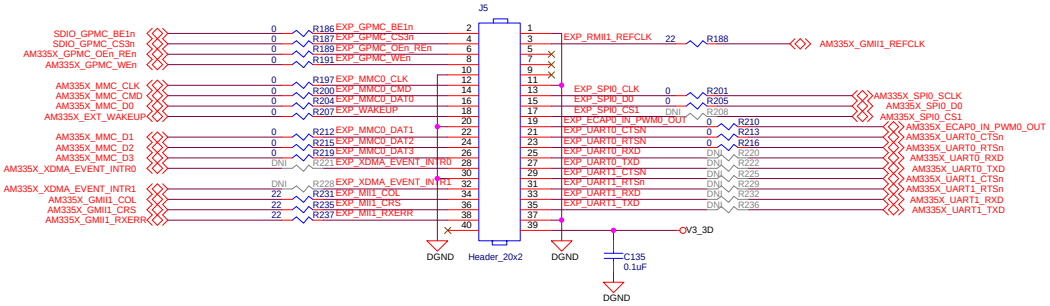


## Expansion Connector - EXP3

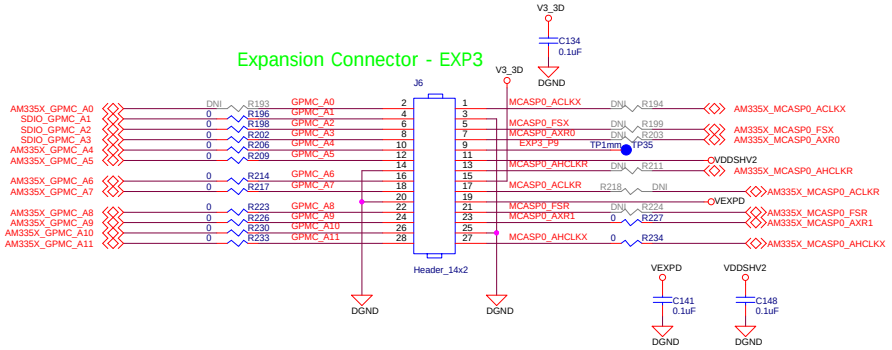


ARM MPU

**Texas Instruments, Inc.**

ARM MPU Business Unit
12500 TI Blvd
Dallas, TX 75243

TEXAS INSTRUMENTS

**AM3358 General Purpose EVM ZCZ Baseboard**

Expansion Connectors

| Size | Document Number | Modified By: | Rev |
|---|---|---|---|
| C | am335x_gpevm_zczbaseboard.dsn | Damon Domke | 1.6A |
| Date: Monday, September 22, 2014 | | Sheet: 8 of 16 | |

## LCD Connectors

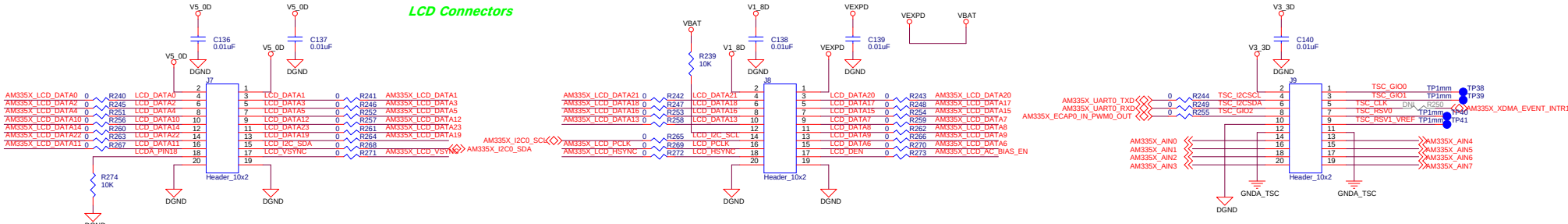


## HDMI Transceiver

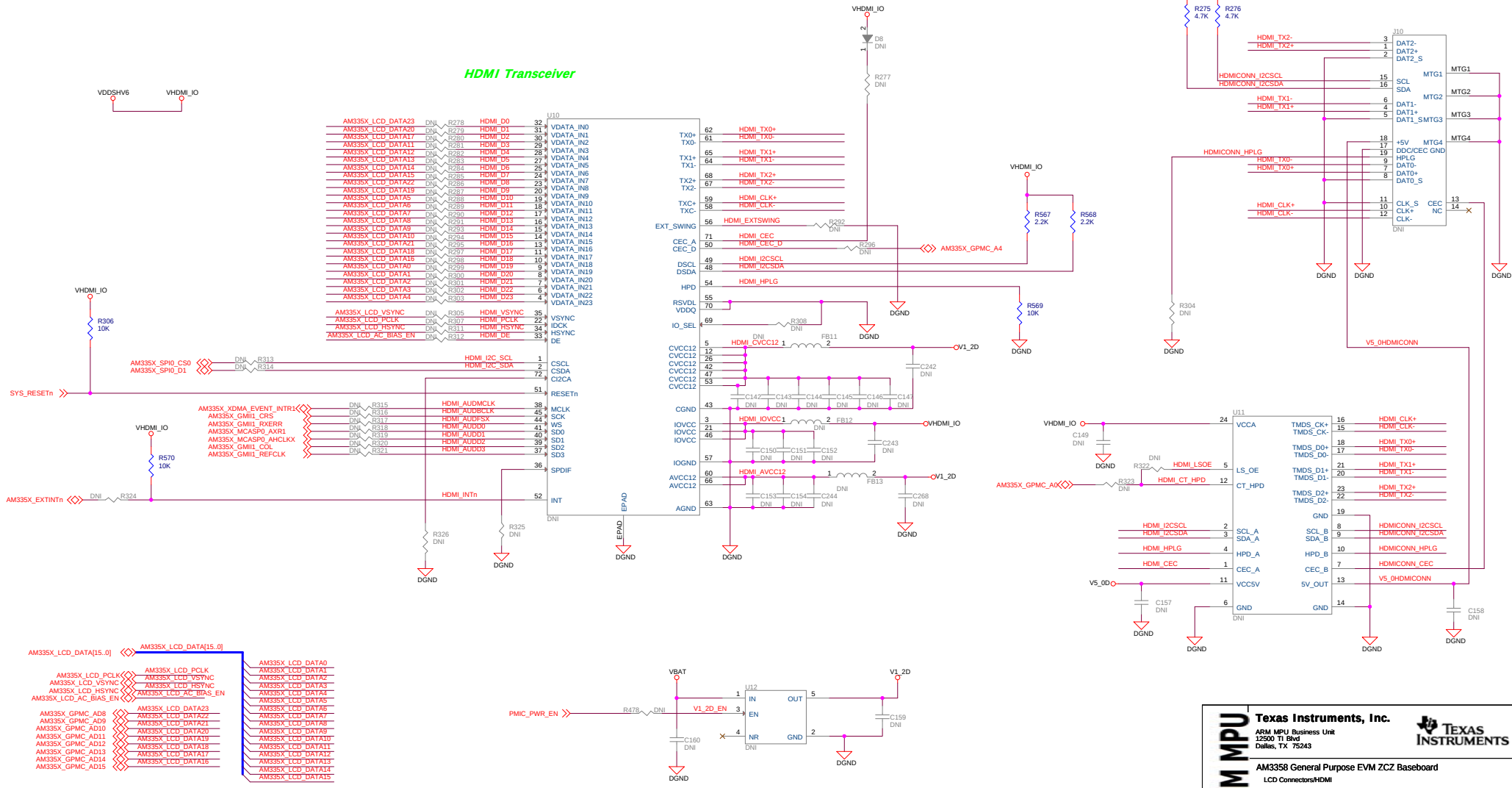


| | | | |
|---|---|---|---|
| ARM MPU | **Texas Instruments, Inc.** ARM MPU Business Unit 12500 TI Blvd Dallas, TX 75243 | | |
| | AM3358 General Purpose EVM ZCZ Baseboard | | |
| | LCD Connectors/HDMI | | |
| Size: C | Document Number: am335x_gpevm_zczbaseboard.dsn | Modified By: Damon Domke | Rev: 1.6A |
| Date: Monday, September 22, 2014 | Sheet: 9 of 16 | | |

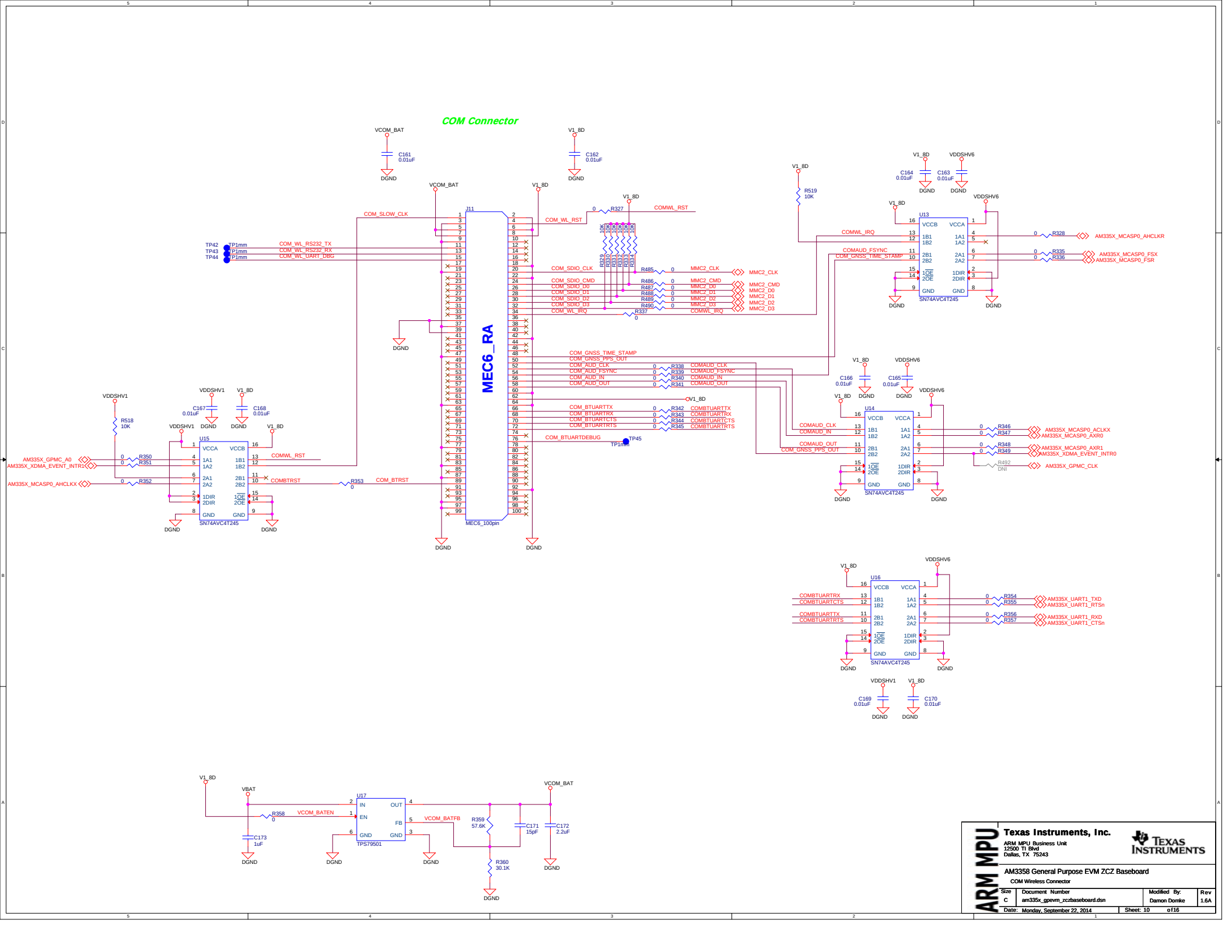
COM Connector
MEC6_RA
MEC6_100pin
J11
U13
U14
U15
U16
U17
SN74AVC4T245
TPS79501
VCOM_BAT
V1_8D
VDDSHV1
VDDSHV6
DGND
COM_SLOW_CLK
COM_WL_RS232_TX
COM_WL_RS232_RX
COM_WL_UART_DBG
COM_WL_RST
COMWL_RST
COM_SDIO_CLK
COM_SDIO_CMD
COM_SDIO_D0
COM_SDIO_D1
COM_SDIO_D2
COM_SDIO_D3
COM_WL_IRQ
COMWL_IRQ
COM_GNSS_TIME_STAMP
COM_GNSS_PPS_OUT
COM_AUD_CLK
COM_AUD_FSYNC
COM_AUD_IN
COM_AUD_OUT
COMAUD_CLK
COMAUD_FSYNC
COMAUD_IN
COMAUD_OUT
COM_BTUARTTX
COM_BTUARTRX
COM_BTUARTCTS
COM_BTUARTRTS
COMBTUARTTX
COMBTUARTRX
COMBTUARTCTS
COMBTUARTRTS
COM_BTUARTDEBUG
COM_BTRST
COMBTRST
MMC2_CLK
MMC2_CMD
MMC2_D0
MMC2_D1
MMC2_D2
MMC2_D3
AM335X_MCASP0_AHCLKR
AM335X_MCASP0_FSX
AM335X_MCASP0_FSR
AM335X_MCASP0_ACLKX
AM335X_MCASP0_AXR0
AM335X_MCASP0_AXR1
AM335X_XDMA_EVENT_INTR0
AM335X_GPMC_CLK
AM335X_GPMC_A0
AM335X_XDMA_EVENT_INTR1
AM335X_MCASP0_AHCLKX
AM335X_UART1_TXD
AM335X_UART1_RTSn
AM335X_UART1_RXD
AM335X_UART1_CTSn
VBAT
VCOM_BATEN
VCOM_BATFB
TP42
TP43
TP44
TP45
Texas Instruments, Inc.
ARM MPU Business Unit
12500 TI Blvd
Dallas, TX 75243
AM3358 General Purpose EVM ZCZ Baseboard
COM Wireless Connector
Size C
Document Number am335x_gpevm_zczbaseboard.dsn
Modified By: Damon Domke
Rev 1.6A
Date: Monday, September 22, 2014
Sheet: 10 of 16

## RS-232

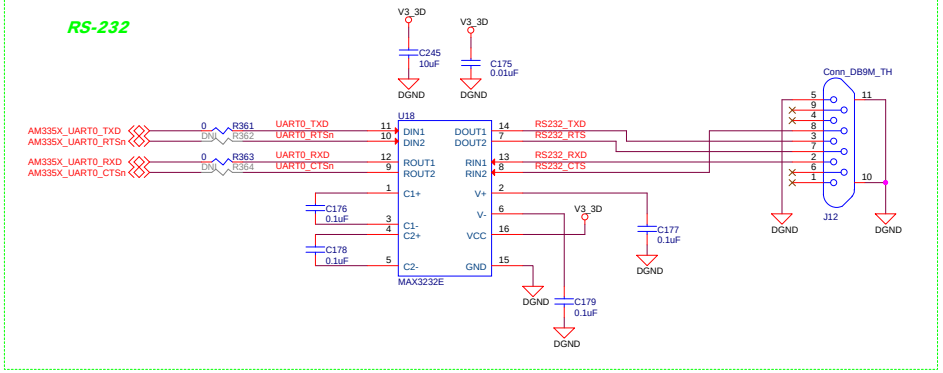


## SD/MMC Connector

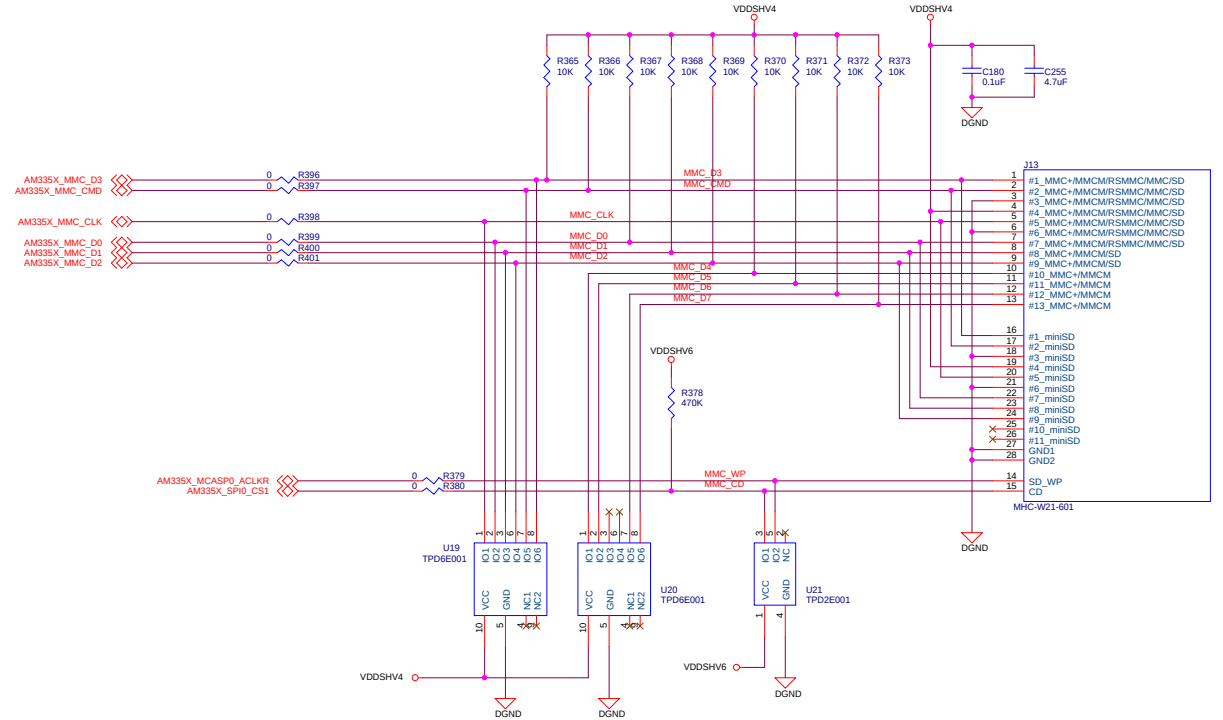



ARM MPU

**Texas Instruments, Inc.**

ARM MPU Business Unit
12500 TI Blvd
Dallas, TX 75243


**AM3358 General Purpose EVM ZCZ Baseboard**

Serial & SDMMC Interfaces

| Size | Document Number | Modified By: | Rev |
|---|---|---|---|
| C | am335x_gpevm_zczbaseboard.dsn | Damon Domke | 1.6A |
| Date: Monday, September 22, 2014 | | Sheet: 11 of 16 | |

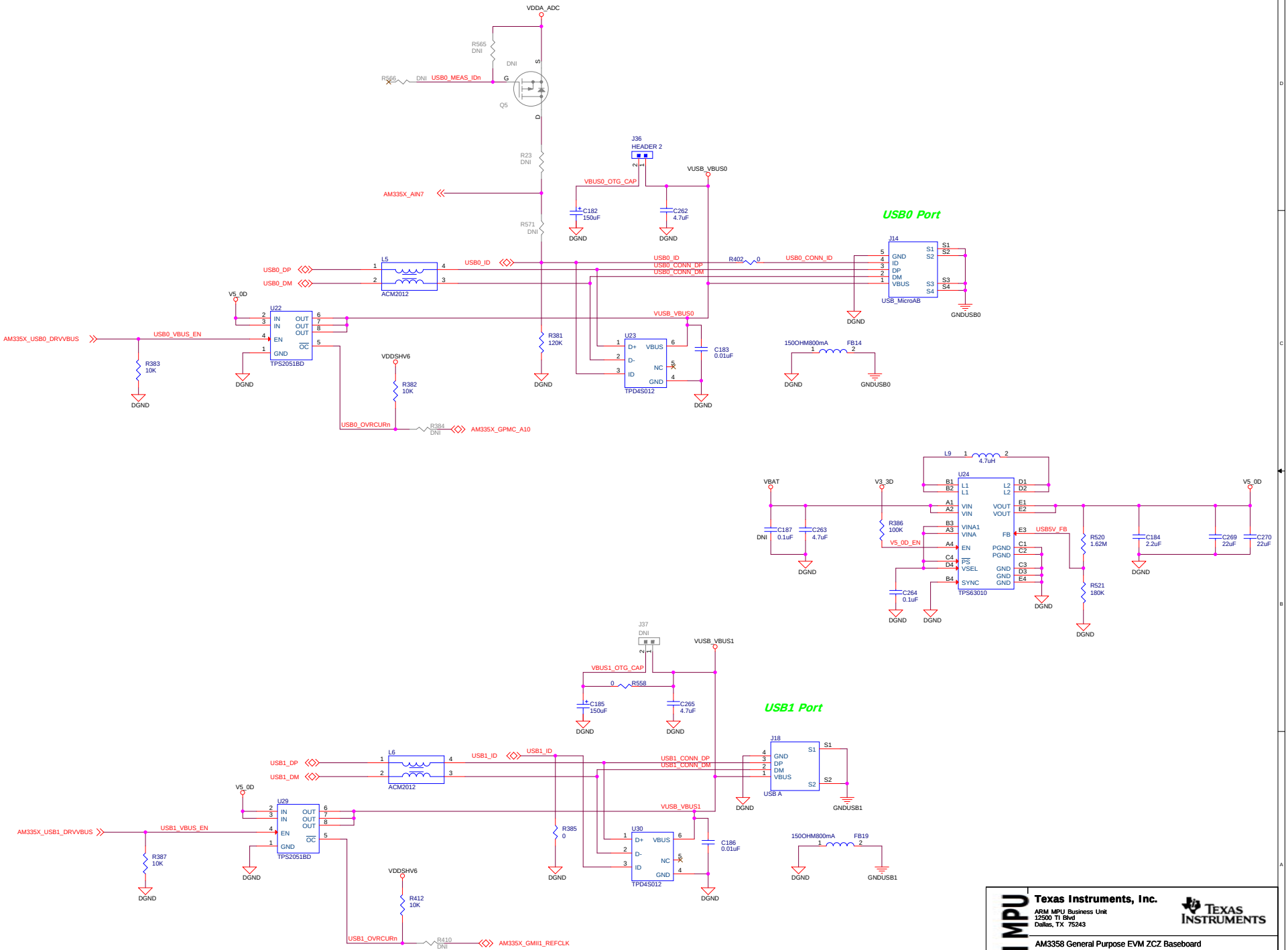


**Texas Instruments, Inc.**
ARM MPU Business Unit
12500 TI Blvd
Dallas, TX 75243

ARM MPU

AM3358 General Purpose EVM ZCZ Baseboard
USB

| Size | Document Number | Modified By: | Rev |
|---|---|---|---|
| C | am335x_gpevm_zczbaseboard.dsn | Damon Domke | 1.6A |
| Date: Monday, September 22, 2014 | | Sheet: 12 of 16 | |

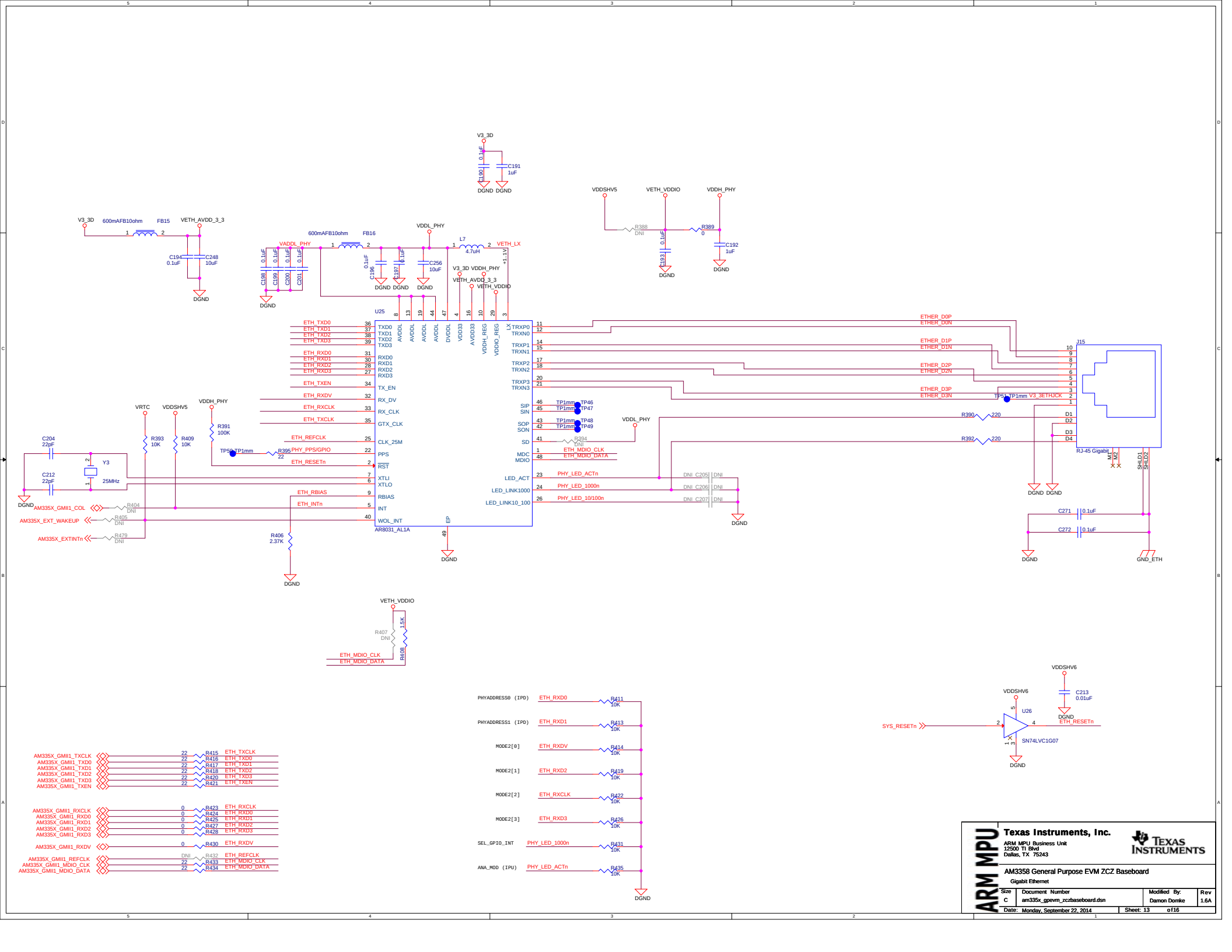
V3_3D
600mAFB10ohm
FB15
VETH_AVDD_3_3
C194 0.1uF
C248 10uF
DGND
VADDL_PHY
600mAFB10ohm
FB16
VDDL_PHY
C198 0.1uF
C199 0.1uF
C200 0.1uF
C201 0.1uF
C196 0.1uF
C197 0.1uF
C256 10uF
L7 4.7uH
VETH_LX
+1.1V
V3_3D
C190 0.1uF
C191 1uF
VDDSHV5
VETH_VDDIO
VDDH_PHY
R388 DNI
R389 0
C193 0.1uF
C192 1uF
U25
ETH_TXD0
ETH_TXD1
ETH_TXD2
ETH_TXD3
ETH_RXD0
ETH_RXD1
ETH_RXD2
ETH_RXD3
ETH_TXEN
ETH_RXDV
ETH_RXCLK
ETH_TXCLK
ETH_REFCLK
PHY_PPS/GPIO
ETH_RESETn
ETH_RBIAS
ETH_INTn
AM335X_EXT_WAKEUP
AM335X_EXTINTn
AM335X_GMII1_COL
AR8031_AL1A
TXD0
TXD1
TXD2
TXD3
RXD0
RXD1
RXD2
RXD3
TX_EN
RX_DV
RX_CLK
GTX_CLK
CLK_25M
PPS
RST
XTLI
XTLO
RBIAS
INT
WOL_INT
EP
TRXP0
TRXN0
TRXP1
TRXN1
TRXP2
TRXN2
TRXP3
TRXN3
SIP
SIN
SOP
SON
SD
MDC
MDIO
LED_ACT
LED_LINK1000
LED_LINK10_100
ETH_MDIO_CLK
ETH_MDIO_DATA
PHY_LED_ACTn
PHY_LED_1000n
PHY_LED_10/100n
ETHER_D0P
ETHER_D0N
ETHER_D1P
ETHER_D1N
ETHER_D2P
ETHER_D2N
ETHER_D3P
ETHER_D3N
TP51 TP1mm V3_3ETHJCK
J15
RJ-45 Gigabit
SHLD1
SHLD2
GND_ETH
C271 0.1uF
C272 0.1uF
R390 220
R392 220
R391 100K
R393 10K
R409 10K
R395 22
R394 DNI
R406 2.37K
C204 22pF
C212 22pF
Y3 25MHz
VRTC
TP50 TP1mm
R407 DNI 1.5K
R408
VETH_VDDIO
PHYADDRESS0 (IPD)
PHYADDRESS1 (IPD)
MODE2[0]
MODE2[1]
MODE2[2]
MODE2[3]
SEL_GPIO_INT
ANA_MOD (IPU)
R411 10K
R413 10K
R414 10K
R419 10K
R422 10K
R426 10K
R431 10K
R435 10K
AM335X_GMII1_TXCLK
AM335X_GMII1_TXD0
AM335X_GMII1_TXD1
AM335X_GMII1_TXD2
AM335X_GMII1_TXD3
AM335X_GMII1_TXEN
AM335X_GMII1_RXCLK
AM335X_GMII1_RXD0
AM335X_GMII1_RXD1
AM335X_GMII1_RXD2
AM335X_GMII1_RXD3
AM335X_GMII1_RXDV
AM335X_GMII1_REFCLK
AM335X_GMII1_MDIO_CLK
AM335X_GMII1_MDIO_DATA
R415 ETH_TXCLK
R416 ETH_TXD0
R417 ETH_TXD1
R418 ETH_TXD2
R420 ETH_TXD3
R421 ETH_TXEN
R423 ETH_RXCLK
R424 ETH_RXD0
R425 ETH_RXD1
R427 ETH_RXD2
R428 ETH_RXD3
R430 ETH_RXDV
R432 ETH_REFCLK
R433 ETH_MDIO_CLK
R434 ETH_MDIO_DATA
VDDSHV6
U26
SN74LVC1G07
SYS_RESETn
ETH_RESETn
C213 0.01uF
Texas Instruments, Inc.
ARM MPU Business Unit
12500 TI Blvd
Dallas, TX 75243
AM3358 General Purpose EVM ZCZ Baseboard
Gigabit Ethernet
Size C
Document Number am335x_gpevm_zczbaseboard.dsn
Modified By: Damon Domke
Rev 1.6A
Date: Monday, September 22, 2014
Sheet: 13 of 16

## MAVRK Connector

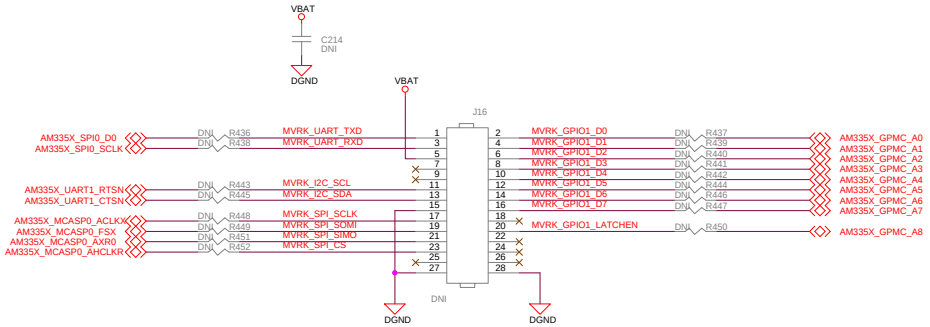


ARM MPU

**Texas Instruments, Inc.**

ARM MPU Business Unit
12500 TI Blvd
Dallas, TX 75243

AM3358 General Purpose EVM ZCZ Baseboard

Analog MAVRK Connector

| Size | Document Number | Modified By: | Rev |
|---|---|---|---|
| C | am335x_gpevm_zczbaseboard.dsn | Damon Domke | 1.6A |
| Date: Monday, September 22, 2014 | | Sheet: 14 of 16 | |

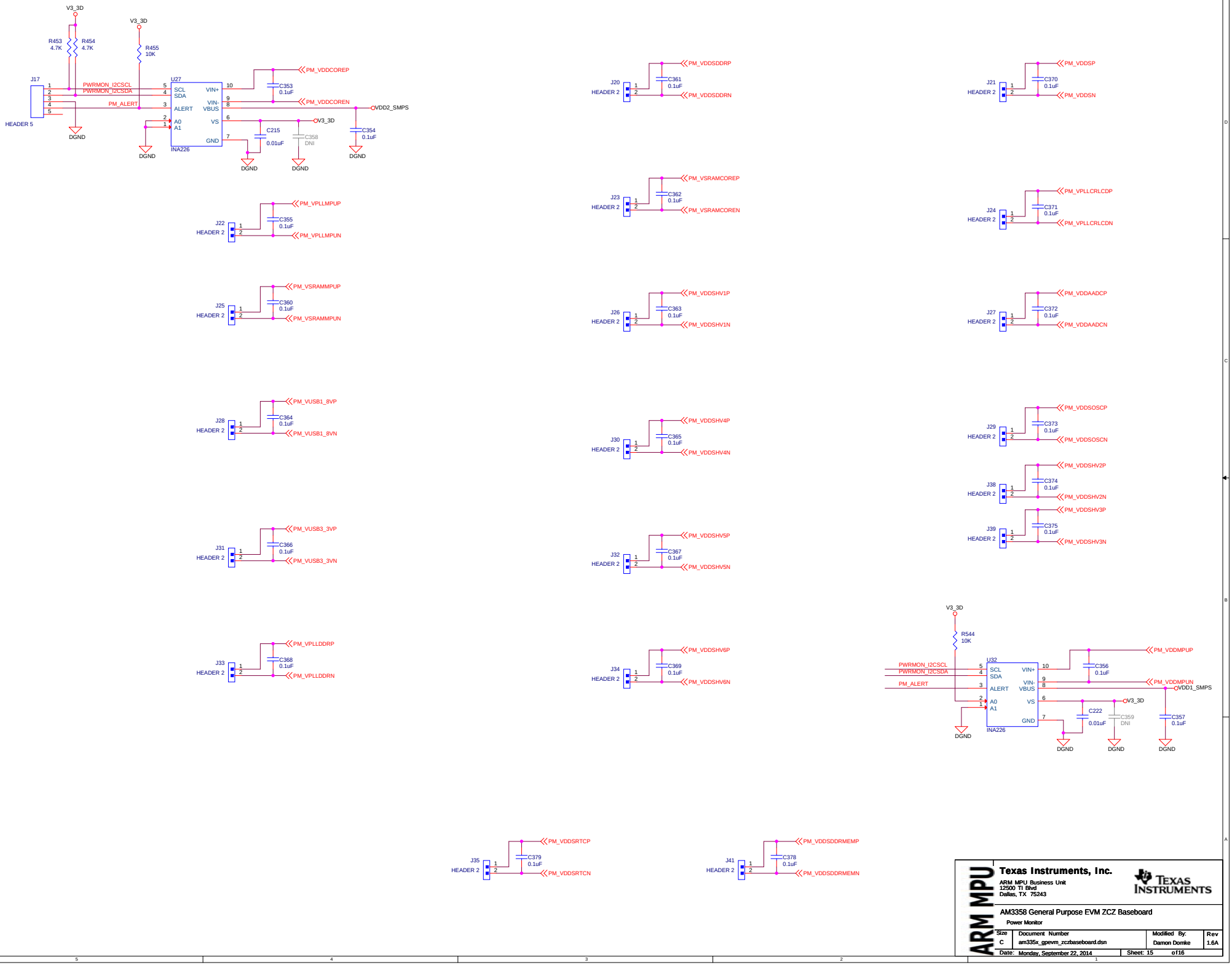
V3_3D
R453 4.7K
R454 4.7K
R455 10K
J17
HEADER 5
PWRMON_I2CSCL
PWRMON_I2CSDA
PM_ALERT
U27
SCL
SDA
ALERT
A0
A1
INA226
VIN+
VIN-
VBUS
VS
GND
PM_VDDCOREP
PM_VDDCOREN
VDD2_SMPS
C353 0.1uF
C215 0.01uF
C358 DNI
C354 0.1uF
DGND
J20 HEADER 2
PM_VDDSDDRP
PM_VDDSDDRN
C361 0.1uF
J21 HEADER 2
PM_VDDSP
PM_VDDSN
C370 0.1uF
J22 HEADER 2
PM_VPLLMPUP
PM_VPLLMPUN
C355 0.1uF
J23 HEADER 2
PM_VSRAMCOREP
PM_VSRAMCOREN
C362 0.1uF
J24 HEADER 2
PM_VPLLCRLCDP
PM_VPLLCRLCDN
C371 0.1uF
J25 HEADER 2
PM_VSRAMMPUP
PM_VSRAMMPUN
C360 0.1uF
J26 HEADER 2
PM_VDDSHV1P
PM_VDDSHV1N
C363 0.1uF
J27 HEADER 2
PM_VDDAADCP
PM_VDDAADCN
C372 0.1uF
J28 HEADER 2
PM_VUSB1_8VP
PM_VUSB1_8VN
C364 0.1uF
J30 HEADER 2
PM_VDDSHV4P
PM_VDDSHV4N
C365 0.1uF
J29 HEADER 2
PM_VDDSOSCP
PM_VDDSOSCN
C373 0.1uF
J38 HEADER 2
PM_VDDSHV2P
PM_VDDSHV2N
C374 0.1uF
J39 HEADER 2
PM_VDDSHV3P
PM_VDDSHV3N
C375 0.1uF
J31 HEADER 2
PM_VUSB3_3VP
PM_VUSB3_3VN
C366 0.1uF
J32 HEADER 2
PM_VDDSHV5P
PM_VDDSHV5N
C367 0.1uF
R544 10K
U32
PWRMON_I2CSCL
PWRMON_I2CSDA
PM_ALERT
SCL
SDA
ALERT
A0
A1
INA226
VIN+
VIN-
VBUS
VS
GND
PM_VDDMPUP
PM_VDDMPUN
VDD1_SMPS
C356 0.1uF
C222 0.01uF
C359 DNI
C357 0.1uF
DGND
J33 HEADER 2
PM_VPLLDDRP
PM_VPLLDDRN
C368 0.1uF
J34 HEADER 2
PM_VDDSHV6P
PM_VDDSHV6N
C369 0.1uF
J35 HEADER 2
PM_VDDSRTCP
PM_VDDSRTCN
C379 0.1uF
J41 HEADER 2
PM_VDDSDDRMEMP
PM_VDDSDDRMEMN
C378 0.1uF
ARM MPU
Texas Instruments, Inc.
ARM MPU Business Unit
12500 TI Blvd
Dallas, TX 75243
TEXAS INSTRUMENTS
AM3358 General Purpose EVM ZCZ Baseboard
Power Monitor
Size C
Document Number am335x_gpevm_zczbaseboard.dsn
Modified By: Damon Domke
Rev 1.6A
Date: Monday, September 22, 2014
Sheet: 15 of 16

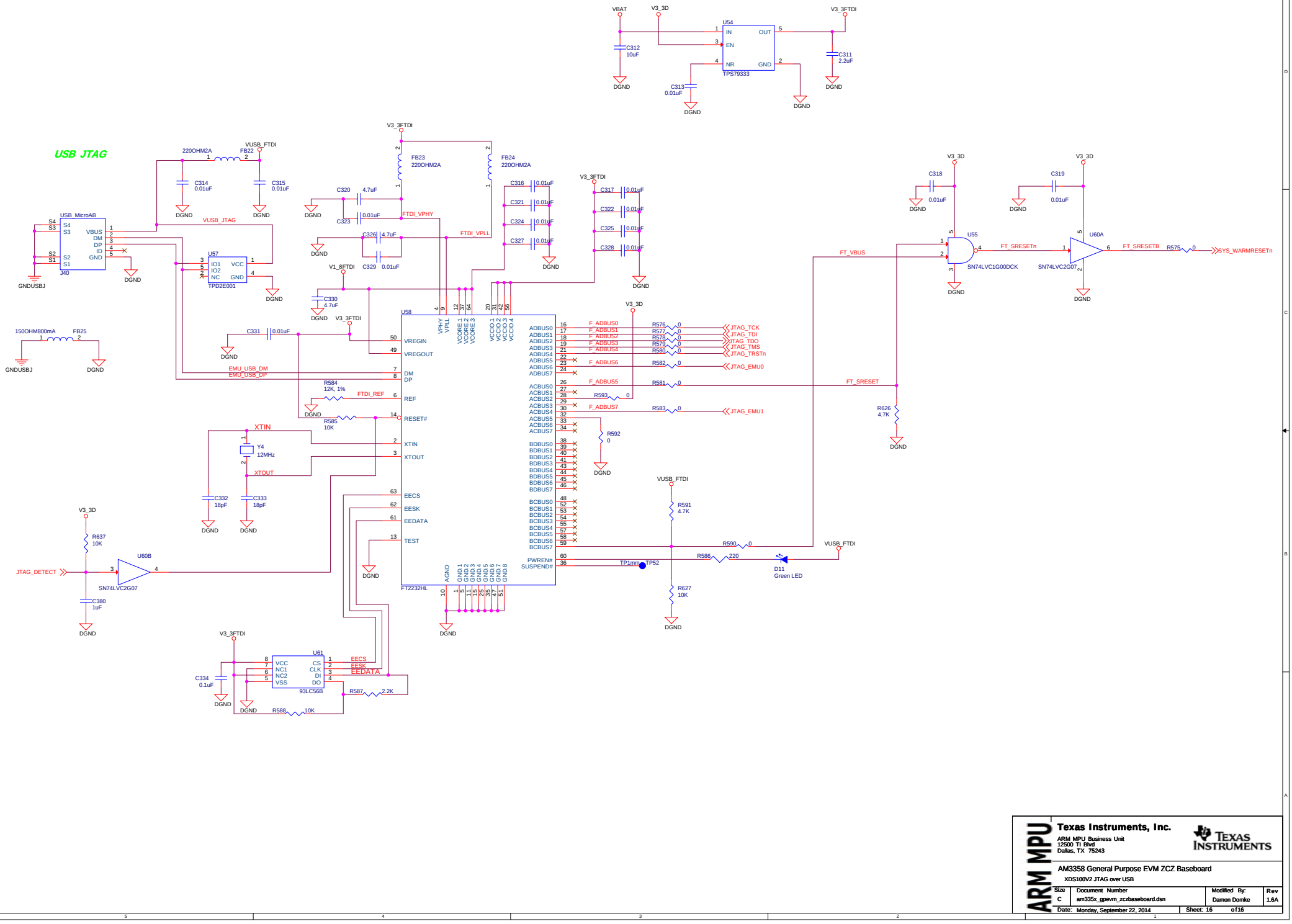
USB JTAG
VBAT
V3_3D
V3_3FTDI
U54
IN
OUT
EN
NR
GND
TPS79333
C312
10uF
C313
0.01uF
C311
2.2uF
DGND
VUSB_FTDI
220OHM2A
FB22
FB23
FB24
C314
0.01uF
C315
0.01uF
USB_MicroAB
VUSB_JTAG
J40
GNDUSBJ
U57
TPD2E001
C320
4.7uF
C323
0.01uF
C326
4.7uF
C329
0.01uF
FTDI_VPHY
FTDI_VPLL
C316
0.01uF
C321
0.01uF
C324
0.01uF
C327
0.01uF
C317
0.01uF
C322
0.01uF
C325
0.01uF
C328
0.01uF
V1_8FTDI
C330
4.7uF
150OHM800mA
FB25
C331
0.01uF
U58
VREGIN
VREGOUT
DM
DP
REF
RESET#
XTIN
XTOUT
EECS
EESK
EEDATA
TEST
FT2232HL
R584
12K, 1%
R585
10K
Y4
12MHz
C332
18pF
C333
18pF
EMU_USB_DM
EMU_USB_DP
FTDI_REF
ADBUS0
ADBUS1
ADBUS2
ADBUS3
ADBUS4
ADBUS5
ADBUS6
ADBUS7
ACBUS0
ACBUS1
ACBUS2
ACBUS3
ACBUS4
ACBUS5
ACBUS6
ACBUS7
BDBUS0
BDBUS1
BDBUS2
BDBUS3
BDBUS4
BDBUS5
BDBUS6
BDBUS7
BCBUS0
BCBUS1
BCBUS2
BCBUS3
BCBUS4
BCBUS5
BCBUS6
BCBUS7
PWREN#
SUSPEND#
F_ADBUS0
F_ADBUS1
F_ADBUS2
F_ADBUS3
F_ADBUS4
F_ADBUS6
F_ADBUS5
F_ADBUS7
R576
R577
R578
R579
R580
R582
R581
R583
R593
R592
JTAG_TCK
JTAG_TDI
JTAG_TDO
JTAG_TMS
JTAG_TRSTn
JTAG_EMU0
JTAG_EMU1
FT_SRESET
R626
4.7K
R591
4.7K
R590
R586
220
R627
10K
D11
Green LED
TP1mm
TP52
U60B
SN74LVC2G07
JTAG_DETECT
R637
10K
C380
1uF
U61
93LC56B
C334
0.1uF
R587
2.2K
R588
10K
U55
SN74LVC1G00DCK
U60A
SN74LVC2G07
FT_VBUS
FT_SRESETn
FT_SRESETB
R575
SYS_WARMRESETn
C318
C319
Texas Instruments, Inc.
ARM MPU Business Unit
12500 TI Blvd
Dallas, TX 75243
AM3358 General Purpose EVM ZCZ Baseboard
XDS100V2 JTAG over USB
Size
C
Document Number
am335x_gpevm_zczbaseboard.dsn
Modified By:
Damon Domke
Rev
1.6A
Date:
Monday, September 22, 2014
Sheet: 16 of 16