# ARM MPU AM335X Base Board
# 15x15 Package

-See the Hardware User Guide for board details
-See the Hardware Implementation Document for design details
-See the PCB Build Specification for PCB Details

PCB1

AM335x 15x15 Base Board Bare PCB

ARM MPU

**Texas Instruments, Inc.**
ARM MPU Business Unit
12500 TI Blvd
Dallas, TX 75243

TEXAS INSTRUMENTS

AM335X EVM 15x15 Baseboard

Title Page

| Size | Document Number | Modified By: | Rev |
|---|---|---|---|
| C | am335x_evm_15x15baseboard.dsn | Damon Domke | 1.2A |

Date: Wednesday, December 21, 2011 Sheet: 1 of 15

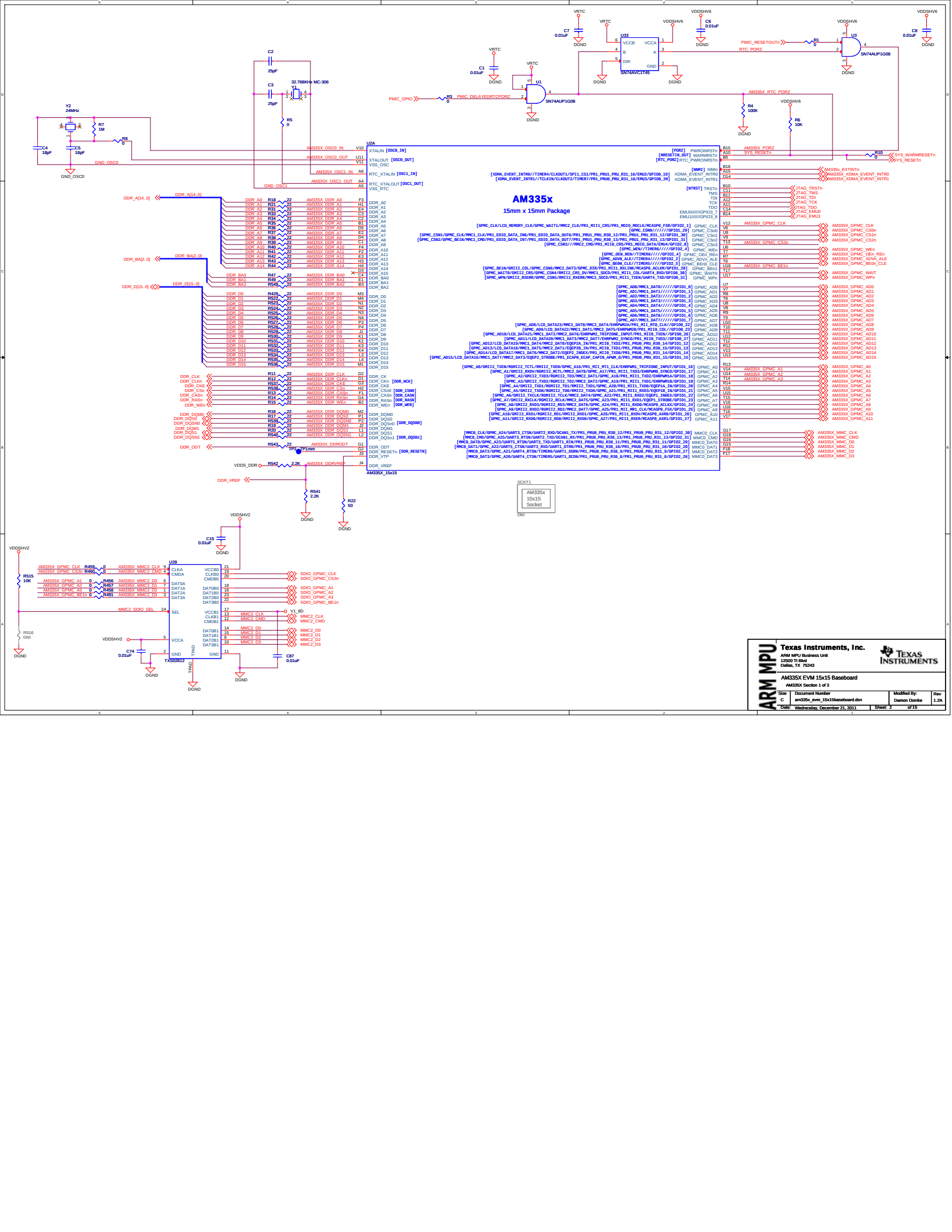
AM335x
15mm x 15mm Package
U2A
SCKT1
AM335x
15x15
Socket
DNI
U28
TXS02612
Texas Instruments, Inc.
ARM MPU Business Unit
12500 TI Blvd
Dallas, TX 75243
ARM MPU
AM335X EVM 15x15 Baseboard
AM335X Section 1 of 3
Size: C
Document Number: am335x_evm_15x15baseboard.dsn
Modified By: Damon Domke
Rev: 1.2A
Date: Wednesday, December 21, 2011
Sheet: 2 of 15

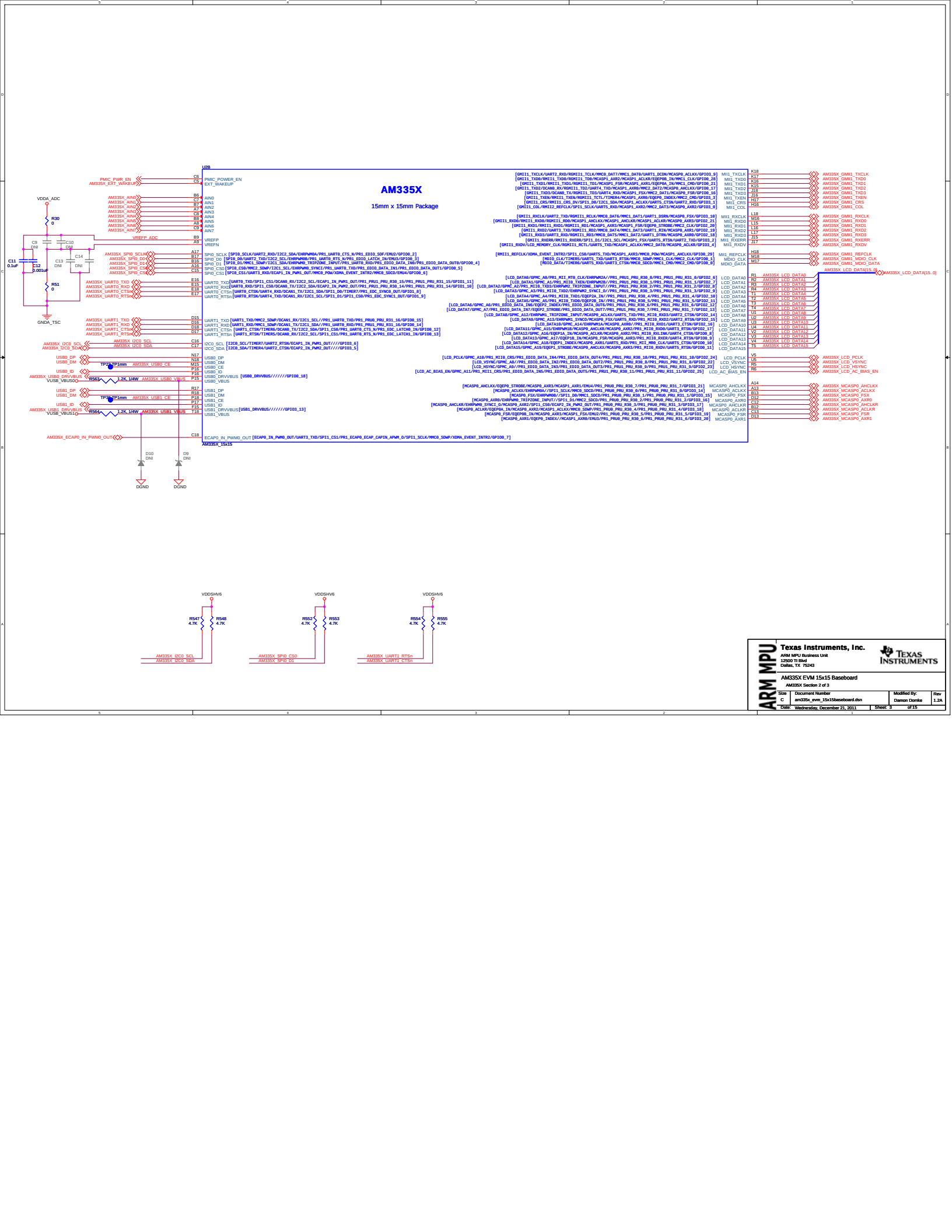
AM335X
15mm x 15mm Package
U2B
AM335X_15x15
PMIC_PWR_EN
AM335X_EXT_WAKEUP
PMIC_POWER_EN
EXT_WAKEUP
VDDA_ADC
R30
0
C9
DNI
C10
DNI
C11
0.1uF
C12
0.001uF
C13
DNI
C14
DNI
R51
0
GNDA_TSC
VREFP_ADC
AM335X_AIN0
AM335X_AIN1
AM335X_AIN2
AM335X_AIN3
AM335X_AIN4
AM335X_AIN5
AM335X_AIN6
AM335X_AIN7
AIN0
AIN1
AIN2
AIN3
AIN4
AIN5
AIN6
AIN7
VREFP
VREFN
AM335X_SPI0_SCLK
AM335X_SPI0_D0
AM335X_SPI0_D1
AM335X_SPI0_CS0
AM335X_SPI0_CS1
SPI0_SCLK
SPI0_D0
SPI0_D1
SPI0_CS0
SPI0_CS1
AM335X_UART0_TXD
AM335X_UART0_RXD
AM335X_UART0_CTSn
AM335X_UART0_RTSn
UART0_TXD
UART0_RXD
UART0_CTSn
UART0_RTSn
AM335X_UART1_TXD
AM335X_UART1_RXD
AM335X_UART1_CTSn
AM335X_UART1_RTSn
UART1_TXD
UART1_RXD
UART1_CTSn
UART1_RTSn
AM335X_I2C0_SCL
AM335X_I2C0_SDA
I2C0_SCL
I2C0_SDA
USB0_DP
USB0_DM
USB0_ID
USB0_VBUS
USB0_DRVVBUS
AM335X_USB0_DRVVBUS
VUSB_VBUSO
R563
1.2K, 1/4W
AM335X_USB0_VBUS
TP2
TP1mm
AM335X_USB0_CE
USB1_DP
USB1_DM
USB1_ID
USB1_VBUS
USB1_DRVVBUS
AM335X_USB1_DRVVBUS
VUSB_VBUS1
R564
1.2K, 1/4W
AM335X_USB1_VBUS
TP3
TP1mm
AM335X_USB1_CE
AM335X_ECAP0_IN_PWM0_OUT
ECAP0_IN_PWM0_OUT
D10
DNI
D9
DNI
DGND
DGND
[GMII1_TXCLK/UART2_RXD/RGMII1_TCLK/MMC0_DAT7/MMC1_DAT0/UART1_DCDN/MCASP0_ACLKX/GPIO3_9]
[GMII1_TXD0/RMII1_TXD0/RGMII1_TD0/MCASP1_AXR2/MCASP1_ACLKX/EQEP0B_IN/MMC1_CLK/GPIO0_28]
[GMII1_TXD1/RMII1_TXD1/RGMII1_TD1/MCASP1_FSR/MCASP1_AXR1/EQEP0A_IN/MMC1_CMD/GPIO0_21]
[GMII1_TXD2/DCAN0_RX/RGMII1_TD2/UART4_TXD/MCASP1_AXR0/MMC2_DAT2/MCASP0_AHCLKX/GPIO0_17]
[GMII1_TXD3/DCAN0_TX/RGMII1_TD3/UART4_RXD/MCASP1_FSX/MMC2_DAT1/MCASP0_FSR/GPIO0_16]
[GMII1_TXEN/RMII1_TXEN/RGMII1_TCTL/TIMER4/MCASP1_AXR0/EQEP0_INDEX/MMC2_CMD/GPIO3_3]
[GMII1_CRS/RMII1_CRS_DV/SPI1_D0/I2C1_SDA/MCASP1_ACLKX/UART5_CTSN/UART2_RXD/GPIO3_1]
[GMII1_COL/RMII2_REFCLK/SPI1_SCLK/UART5_RXD/MCASP1_AXR2/MMC2_DAT3/MCASP0_AXR2/GPIO3_0]
[GMII1_RXCLK/UART2_TXD/RGMII1_RCLK/MMC0_DAT6/MMC1_DAT1/UART1_DSRN/MCASP0_FSX/GPIO3_10]
[GMII1_RXD0/RMII1_RXD0/RGMII1_RD0/MCASP1_AHCLKX/MCASP1_AHCLKR/MCASP1_ACLKR/MCASP0_AXR3/GPIO2_21]
[GMII1_RXD1/RMII1_RXD1/RGMII1_RD1/MCASP1_AXR3/MCASP1_FSR/EQEP0_STROBE/MMC2_CLK/GPIO2_20]
[GMII1_RXD2/UART3_TXD/RGMII1_RD2/MMC0_DAT4/MMC1_DAT3/UART1_RIN/MCASP0_AXR1/GPIO2_19]
[GMII1_RXD3/UART3_RXD/RGMII1_RD3/MMC0_DAT5/MMC1_DAT2/UART1_DTRN/MCASP0_AXR0/GPIO2_18]
[GMII1_RXERR/RMII1_RXERR/SPI1_D1/I2C1_SCL/MCASP1_FSX/UART5_RTSN/UART2_TXD/GPIO3_2]
[GMII1_RXDV/LCD_MEMORY_CLK/RGMII1_RCTL/UART5_TXD/MCASP1_ACLKX/MMC2_DAT0/MCASP0_ACLKR/GPIO3_4]
[RMII1_REFCLK/XDMA_EVENT_INTR2/SPI1_CS0/UART5_TXD/MCASP1_AXR3/MMC0_POW/MCASP1_AHCLKX/GPIO0_29]
[MDIO_CLK/TIMER5/UART5_TXD/UART3_RTSN/MMC0_SDWP/MMC1_CLK/MMC2_CLK/GPIO0_1]
[MDIO_DATA/TIMER6/UART5_RXD/UART3_CTSN/MMC0_SDCD/MMC1_CMD/MMC2_CMD/GPIO0_0]
[LCD_DATA0/GPMC_A0/PR1_MII_MT0_CLK/EHRPWM2A//PR1_PRU1_PRU_R30_0/PR1_PRU1_PRU_R31_0/GPIO2_6]
[LCD_DATA1/GPMC_A1/PR1_MII_MT0_TXEN/EHRPWM2B//PR1_PRU1_PRU_R30_1/PR1_PRU1_PRU_R31_1/GPIO2_7]
[LCD_DATA2/GPMC_A2/PR1_MII0_TXD3/EHRPWM2_TRIPZONE_INPUT//PR1_PRU1_PRU_R30_2/PR1_PRU1_PRU_R31_2/GPIO2_8]
[LCD_DATA3/GPMC_A3/PR1_MII0_TXD2/EHRPWM2_SYNCI_O//PR1_PRU1_PRU_R30_3/PR1_PRU1_PRU_R31_3/GPIO2_9]
[LCD_DATA4/GPMC_A4/PR1_MII0_TXD1/EQEP2A_IN//PR1_PRU1_PRU_R30_4/PR1_PRU1_PRU_R31_4/GPIO2_10]
[LCD_DATA5/GPMC_A5/PR1_MII0_TXD0/EQEP2B_IN//PR1_PRU1_PRU_R30_5/PR1_PRU1_PRU_R31_5/GPIO2_11]
[LCD_DATA6/GPMC_A6/PR1_EDIO_DATA_IN0/EQEP2_INDEX//PR1_EDIO_DATA_OUT0/PR1_PRU1_PRU_R30_6/PR1_PRU1_PRU_R31_6/GPIO2_12]
[LCD_DATA7/GPMC_A7/PR1_EDIO_DATA_IN7/EQEP2_STROBE/PR1_EDIO_DATA_OUT7/PR1_PRU1_PRU_R30_7/PR1_PRU1_PRU_R31_7/GPIO2_13]
[LCD_DATA8/GPMC_A12/EHRPWM1_TRIPZONE_INPUT/MCASP0_ACLKX/UART5_TXD/PR1_MII1_RXD3/UART2_CTSN/GPIO2_14]
[LCD_DATA9/GPMC_A13/EHRPWM1_SYNCO/MCASP0_FSX/UART5_RXD/PR1_MII1_RXD2/UART2_RTSN/GPIO2_15]
[LCD_DATA10/GPMC_A14/EHRPWM1A/MCASP0_AXR0//PR1_MII0_RXD1/UART3_CTSN/GPIO2_16]
[LCD_DATA11/GPMC_A15/EHRPWM1B/MCASP0_AHCLKR/MCASP0_AXR2/PR1_MII0_RXD0/UART3_RTSN/GPIO2_17]
[LCD_DATA12/GPMC_A16/EQEP1A_IN/MCASP0_ACLKR/MCASP0_AXR3/PR1_MII0_RXLINK/UART4_CTSN/GPIO2_8]
[LCD_DATA13/GPMC_A17/EQEP1B_IN/MCASP0_FSR/MCASP0_AXR3/PR1_MII0_RXER/UART4_RTSN/GPIO2_9]
[LCD_DATA14/GPMC_A18/EQEP1_INDEX/MCASP0_AXR1/UART5_RXD/PR1_MII_MR0_CLK/UART5_CTSN/GPIO0_10]
[LCD_DATA15/GPMC_A19/EQEP1_STROBE/MCASP0_AHCLKX/MCASP0_AXR3/PR1_MII0_RXDV/UART5_RTSN/GPIO0_11]
[LCD_PCLK/GPMC_A10/PR1_MII0_CRS/PR1_EDIO_DATA_IN4/PR1_EDIO_DATA_OUT4/PR1_PRU1_PRU_R30_10/PR1_PRU1_PRU_R31_10/GPIO2_24]
[LCD_VSYNC/GPMC_A8//PR1_EDIO_DATA_IN2/PR1_EDIO_DATA_OUT2/PR1_PRU1_PRU_R30_8/PR1_PRU1_PRU_R31_8/GPIO2_22]
[LCD_HSYNC/GPMC_A9//PR1_EDIO_DATA_IN3/PR1_EDIO_DATA_OUT3/PR1_PRU1_PRU_R30_9/PR1_PRU1_PRU_R31_9/GPIO2_23]
[LCD_AC_BIAS_EN/GPMC_A11/PR1_MII1_CRS/PR1_EDIO_DATA_IN5/PR1_EDIO_DATA_OUT5/PR1_PRU1_PRU_R30_11/PR1_PRU1_PRU_R31_11/GPIO2_25]
[MCASP0_AHCLKX/EQEP0_STROBE/MCASP0_AXR3/MCASP1_AXR1/EHU4/PR1_PRU0_PRU_R30_7/PR1_PRU0_PRU_R31_7/GPIO3_21]
[MCASP0_ACLKX/EHRPWM0A//SPI1_SCLK/MMC0_SDCD/PR1_PRU0_PRU_R30_6/PR1_PRU0_PRU_R31_6/GPIO3_14]
[MCASP0_FSX/EHRPWM0B//SPI1_D0/MMC1_SDCD/PR1_PRU0_PRU_R30_1/PR1_PRU0_PRU_R31_1/GPIO3_15]
[MCASP0_AXR0/EHRPWM0_TRIPZONE_INPUT//SPI1_D1/MMC2_SDCD/PR1_PRU0_PRU_R30_2/PR1_PRU0_PRU_R31_2/GPIO3_16]
[MCASP0_AHCLKR/EHRPWM0_SYNCI_O/MCASP0_AXR2/SPI1_CS0/ECAP2_IN_PWM2_OUT/PR1_PRU0_PRU_R30_3/PR1_PRU0_PRU_R31_3/GPIO3_17]
[MCASP0_ACLKR/EQEP0A_IN/MCASP0_AXR2/MCASP1_ACLKX/MMC0_SDWP/PR1_PRU0_PRU_R30_4/PR1_PRU0_PRU_R31_4/GPIO3_18]
[MCASP0_FSR/EQEP0B_IN/MCASP0_AXR3/MCASP1_FSX/EMU2/PR1_PRU0_PRU_R30_5/PR1_PRU0_PRU_R31_5/GPIO3_19]
[MCASP0_AXR1/EQEP0_INDEX//MCASP1_AXR0/EMU3/PR1_PRU0_PRU_R30_0/PR1_PRU0_PRU_R31_0/GPIO3_20]
MII1_TXCLK
MII1_TXD0
MII1_TXD1
MII1_TXD2
MII1_TXD3
MII1_TXEN
MII1_CRS
MII1_COL
MII1_RXCLK
MII1_RXD0
MII1_RXD1
MII1_RXD2
MII1_RXD3
MII1_RXERR
MII1_RXDV
MII1_REFCLK
MDIO_CLK
MDIO_DATA
LCD_DATA0
LCD_DATA1
LCD_DATA2
LCD_DATA3
LCD_DATA4
LCD_DATA5
LCD_DATA6
LCD_DATA7
LCD_DATA8
LCD_DATA9
LCD_DATA10
LCD_DATA11
LCD_DATA12
LCD_DATA13
LCD_DATA14
LCD_DATA15
LCD_PCLK
LCD_VSYNC
LCD_HSYNC
LCD_AC_BIAS_EN
MCASP0_AHCLKX
MCASP0_ACLKX
MCASP0_FSX
MCASP0_AXR0
MCASP0_AHCLKR
MCASP0_ACLKR
MCASP0_FSR
MCASP0_AXR1
AM335X_GMII1_TXCLK
AM335X_GMII1_TXD0
AM335X_GMII1_TXD1
AM335X_GMII1_TXD2
AM335X_GMII1_TXD3
AM335X_GMII1_TXEN
AM335X_GMII1_CRS
AM335X_GMII1_COL
AM335X_GMII1_RXCLK
AM335X_GMII1_RXD0
AM335X_GMII1_RXD1
AM335X_GMII1_RXD2
AM335X_GMII1_RXD3
AM335X_GMII1_RXERR
AM335X_GMII1_RXDV
AM335X_GMII1_REFCLK
AM335X_GMII1_MDIO_CLK
AM335X_GMII1_MDIO_DATA
AM335X_LCD_DATA[15..0]
AM335X_LCD_DATA0
AM335X_LCD_DATA1
AM335X_LCD_DATA2
AM335X_LCD_DATA3
AM335X_LCD_DATA4
AM335X_LCD_DATA5
AM335X_LCD_DATA6
AM335X_LCD_DATA7
AM335X_LCD_DATA8
AM335X_LCD_DATA9
AM335X_LCD_DATA10
AM335X_LCD_DATA11
AM335X_LCD_DATA12
AM335X_LCD_DATA13
AM335X_LCD_DATA14
AM335X_LCD_DATA15
AM335X_LCD_PCLK
AM335X_LCD_VSYNC
AM335X_LCD_HSYNC
AM335X_LCD_AC_BIAS_EN
AM335X_MCASP0_AHCLKX
AM335X_MCASP0_ACLKX
AM335X_MCASP0_FSX
AM335X_MCASP0_AXR0
AM335X_MCASP0_AHCLKR
AM335X_MCASP0_ACLKR
AM335X_MCASP0_FSR
AM335X_MCASP0_AXR1
VDDSHV6
R547
4.7K
R548
4.7K
AM335X_I2C0_SCL
AM335X_I2C0_SDA
VDDSHV6
R552
4.7K
R553
4.7K
AM335X_SPI0_CS0
AM335X_SPI0_D1
VDDSHV6
R554
4.7K
R555
4.7K
AM335X_UART1_RTSn
AM335X_UART1_CTSn
ARM MPU
Texas Instruments, Inc.
ARM MPU Business Unit
12500 TI Blvd
Dallas, TX 75243
AM335X EVM 15x15 Baseboard
AM335X Section 2 of 3
Size C
Document Number am335x_evm_15x15baseboard.dsn
Modified By: Damon Domke
Rev 1.2A
Date: Wednesday, December 21, 2011
Sheet: 3 of 15

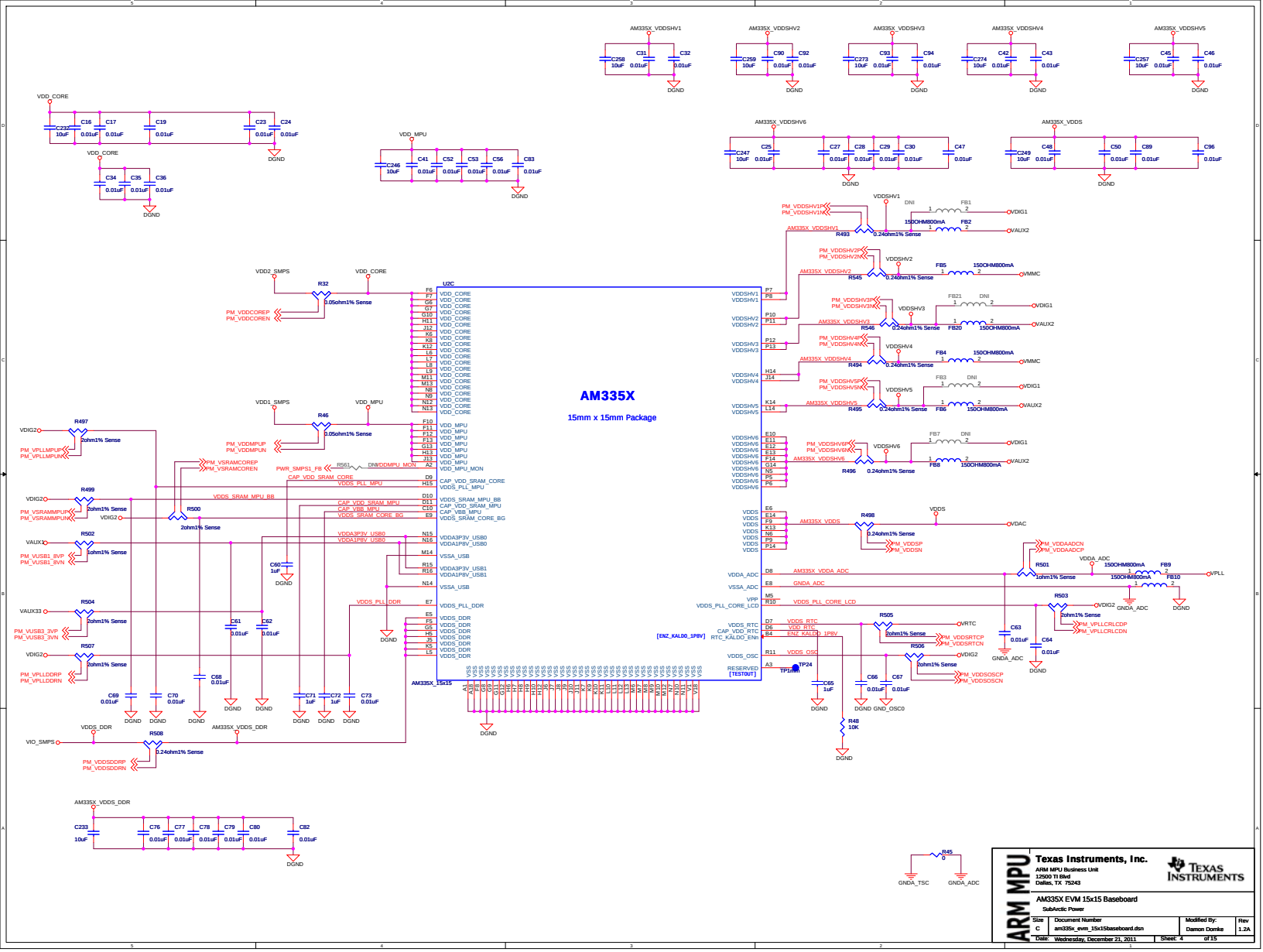
AM335X
15mm x 15mm Package
U2C
AM335X_15x15
AM335X_VDDSHV1
AM335X_VDDSHV2
AM335X_VDDSHV3
AM335X_VDDSHV4
AM335X_VDDSHV5
AM335X_VDDSHV6
AM335X_VDDS
AM335X_VDDS_DDR
VDD_CORE
VDD_MPU
VDD2_SMPS
VDD1_SMPS
VDDS_DDR
VDDS
VDDSHV1
VDDSHV2
VDDSHV3
VDDSHV4
VDDSHV5
VDDSHV6
VDDA_ADC
VDDS_PLL_CORE_LCD
VDDS_RTC
VDDS_OSC
VIO_SMPS
DGND
GNDA_ADC
GND_OSC0
GNDA_TSC
R45
0
R48
10K
TP24
TP1mm
[ENZ_KALDO_1P8V]
[TESTOUT]
RESERVED
Texas Instruments, Inc.
ARM MPU Business Unit
12500 TI Blvd
Dallas, TX 75243
AM335X EVM 15x15 Baseboard
SubArctic Power
Size
C
Document Number
am335x_evm_15x15baseboard.dsn
Modified By:
Damon Domke
Rev
1.2A
Date: Wednesday, December 21, 2011
Sheet: 4 of 15

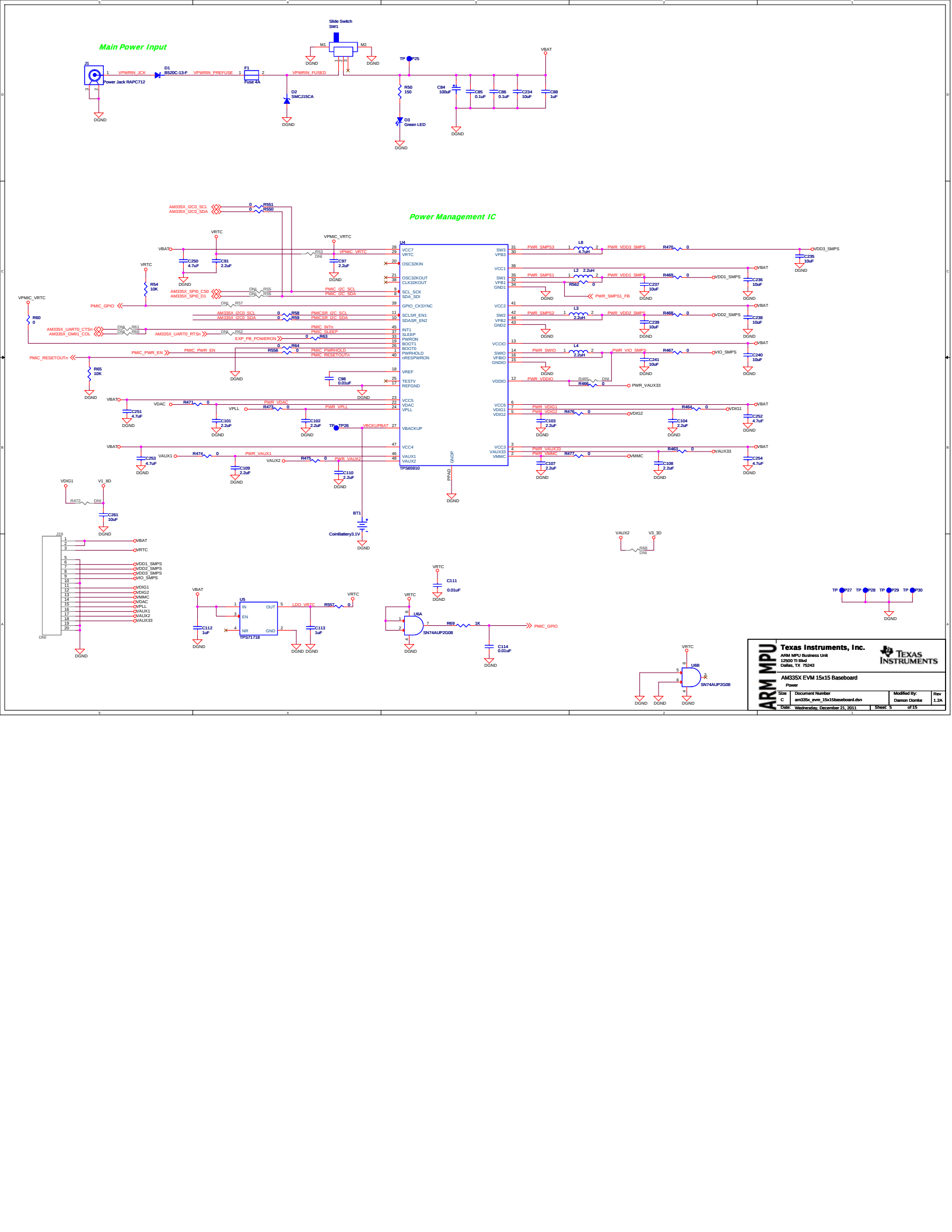


| | | | |
|---|---|---|---|
| Texas Instruments, Inc. | | | |
| ARM MPU Business Unit | | | |
| 12500 TI Blvd | | | |
| Dallas, TX 75243 | | | |
| AM335X EVM 15x15 Baseboard | | | |
| Power | | | |
| Size: C | Document Number: am335x_evm_15x15baseboard.dsn | Modified By: Damon Domke | Rev: 1.2A |
| Date: Wednesday, December 21, 2011 | Sheet: 5 of 15 | | |

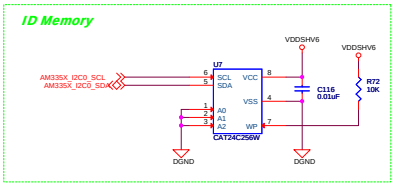


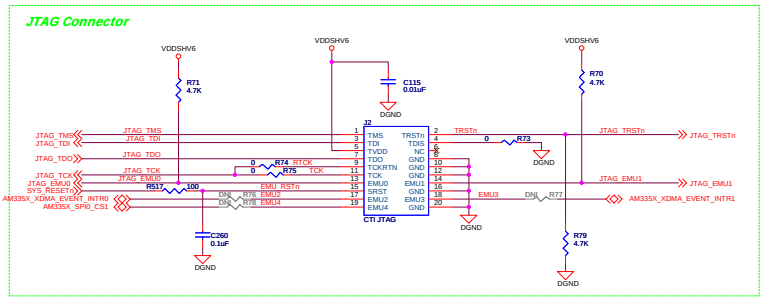


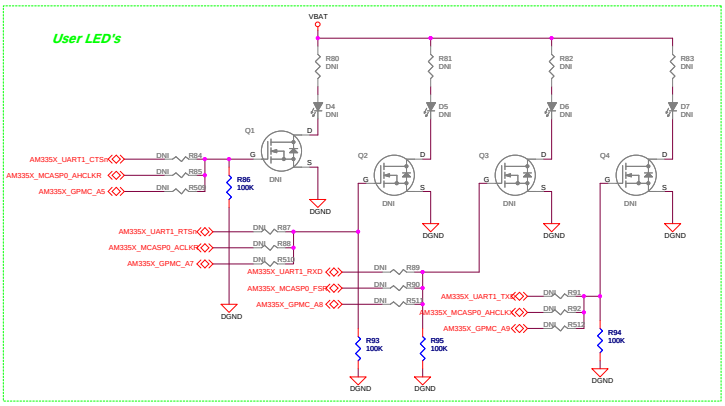


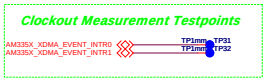


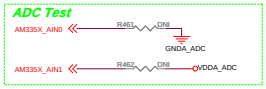


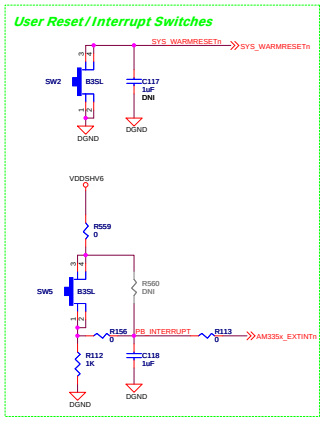


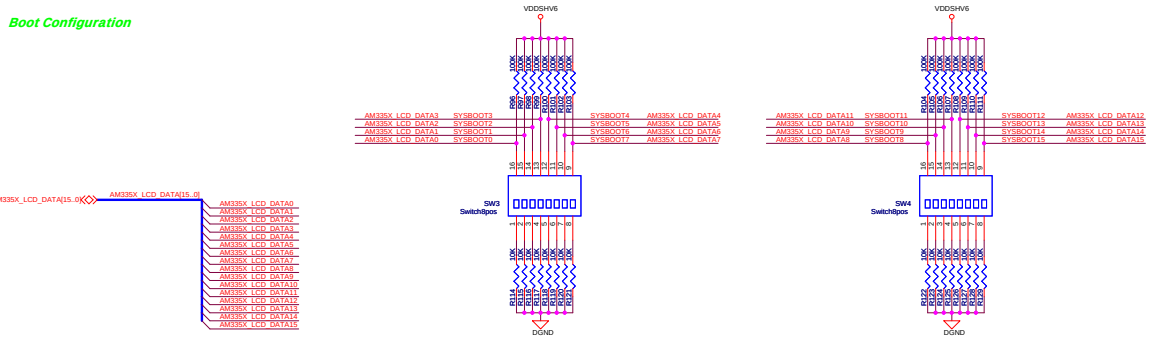


| | | | |
|---|---|---|---|
| ARM MPU | Texas Instruments, Inc.<br>ARM MPU Business Unit<br>12500 TI Blvd<br>Dallas, TX 75243 | | |
| | AM335X EVM 15x15 Baseboard | | |
| | DebugConfiguration | | |
| Size: C | Document Number: am335x_evm_15x15baseboard.dsn | Modified By: Damon Domke | Rev: 1.2A |
| Date: Wednesday, December 21, 2011 | Sheet: 6 of 15 | | |

## DDR2 SDRAM

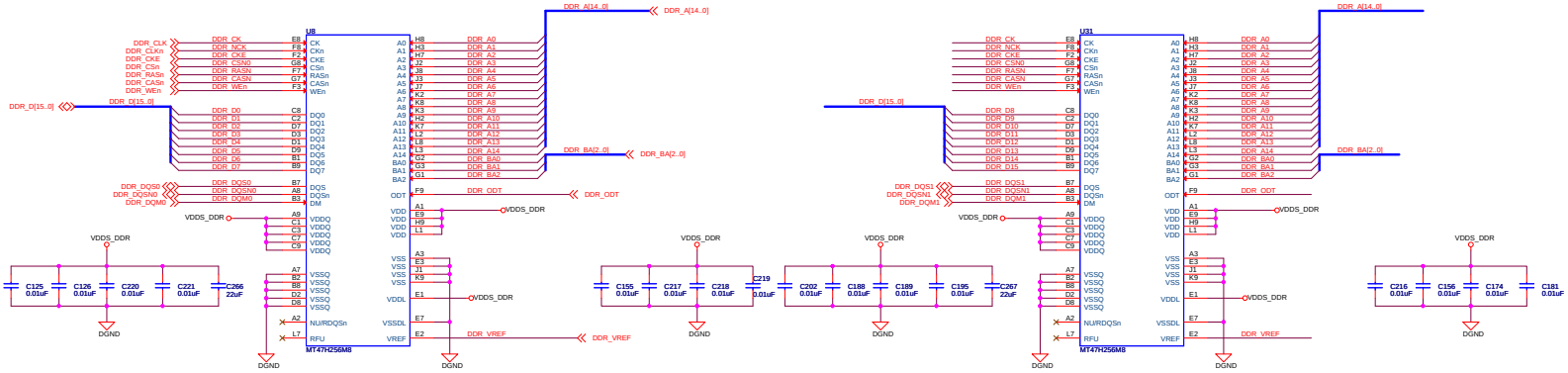


## NAND Memory

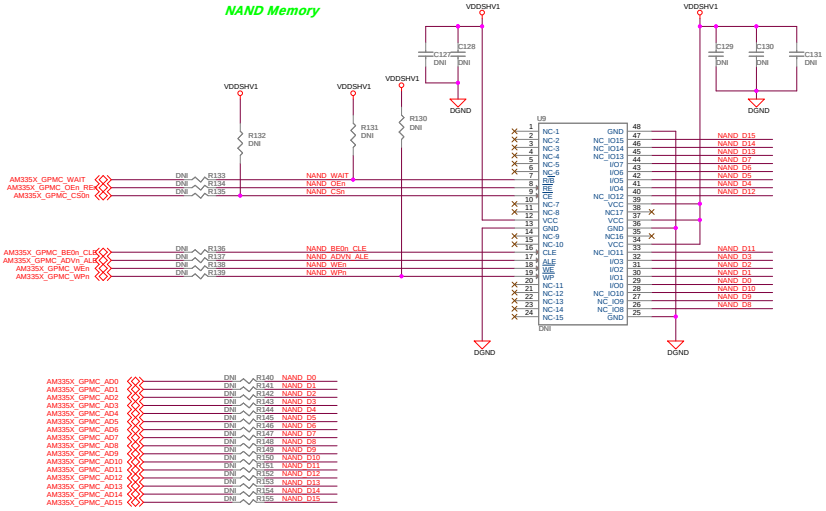





ARM MPU

**Texas Instruments, Inc.**
ARM MPU Business Unit
12500 TI Blvd
Dallas, TX 75243

**AM335X EVM 15x15 Baseboard**
Memory

| Size | Document Number | Modified By: | Rev |
|---|---|---|---|
| C | am335x_evm_15x15baseboard.dsn | Damon Domke | 1.2A |
| Date: Wednesday, December 21, 2011 | Sheet: 7 of 15 | | |

## Expansion Connector - EXP0

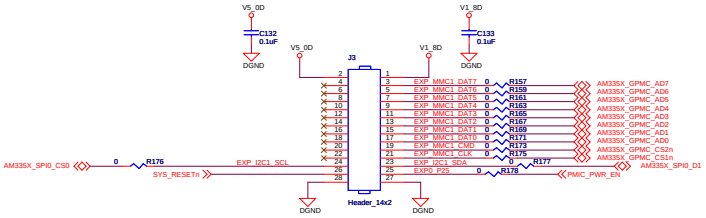


## Expansion Connector - EXP1

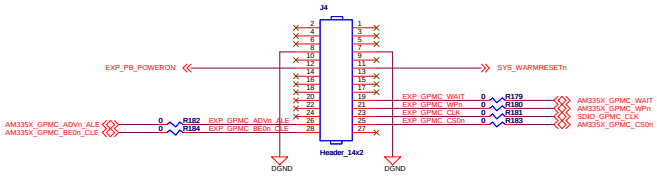


## Expansion Connector - EXP2

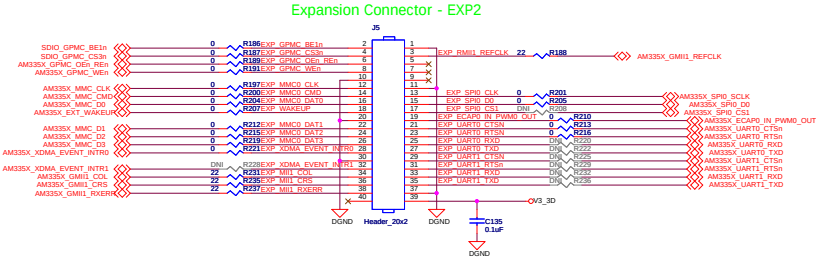


## Expansion Connector - EXP3

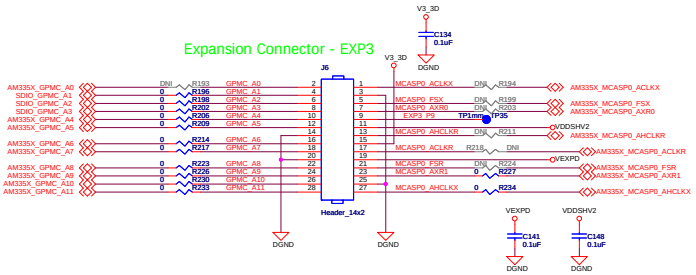


ARM MPU

**Texas Instruments, Inc.**
ARM MPU Business Unit
12500 TI Blvd
Dallas, TX 75243

**AM335X EVM 15x15 Baseboard**
Expansion Connectors

| Size | Document Number | Modified By: | Rev |
|---|---|---|---|
| C | am335x_evm_15x15baseboard.dsn | Damon Domke | 1.2A |
| Date: Wednesday, December 21, 2011 | Sheet: 8 of 15 | | |

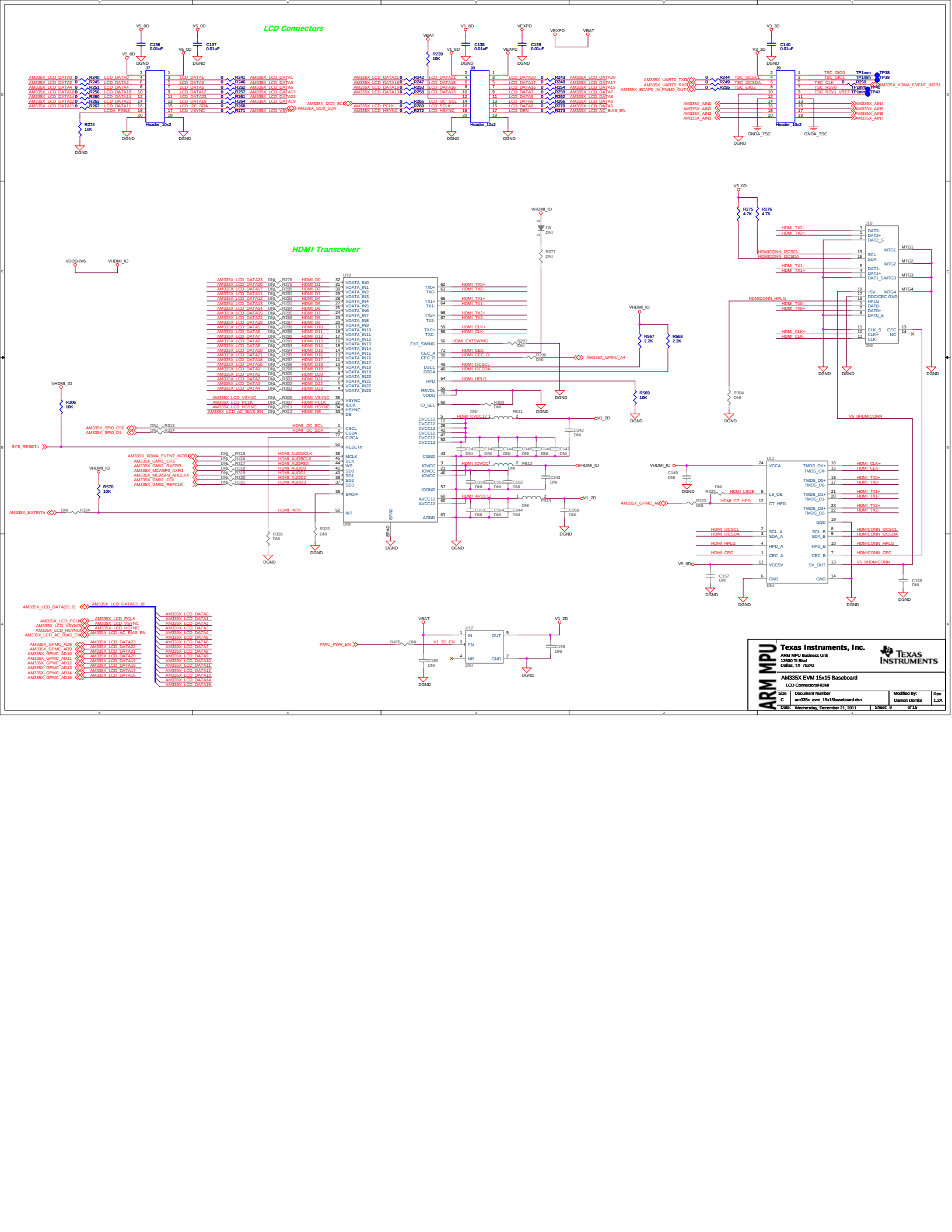
LCD Connectors
HDMI Transceiver
Texas Instruments, Inc.
ARM MPU Business Unit
12500 TI Blvd
Dallas, TX 75243
AM335X EVM 15x15 Baseboard
LCD Connectors/HDMI
Size C
Document Number am335x_evm_15x15baseboard.dsn
Modified By: Damon Domke
Rev 1.2A
Date: Wednesday, December 21, 2011
Sheet 9 of 15

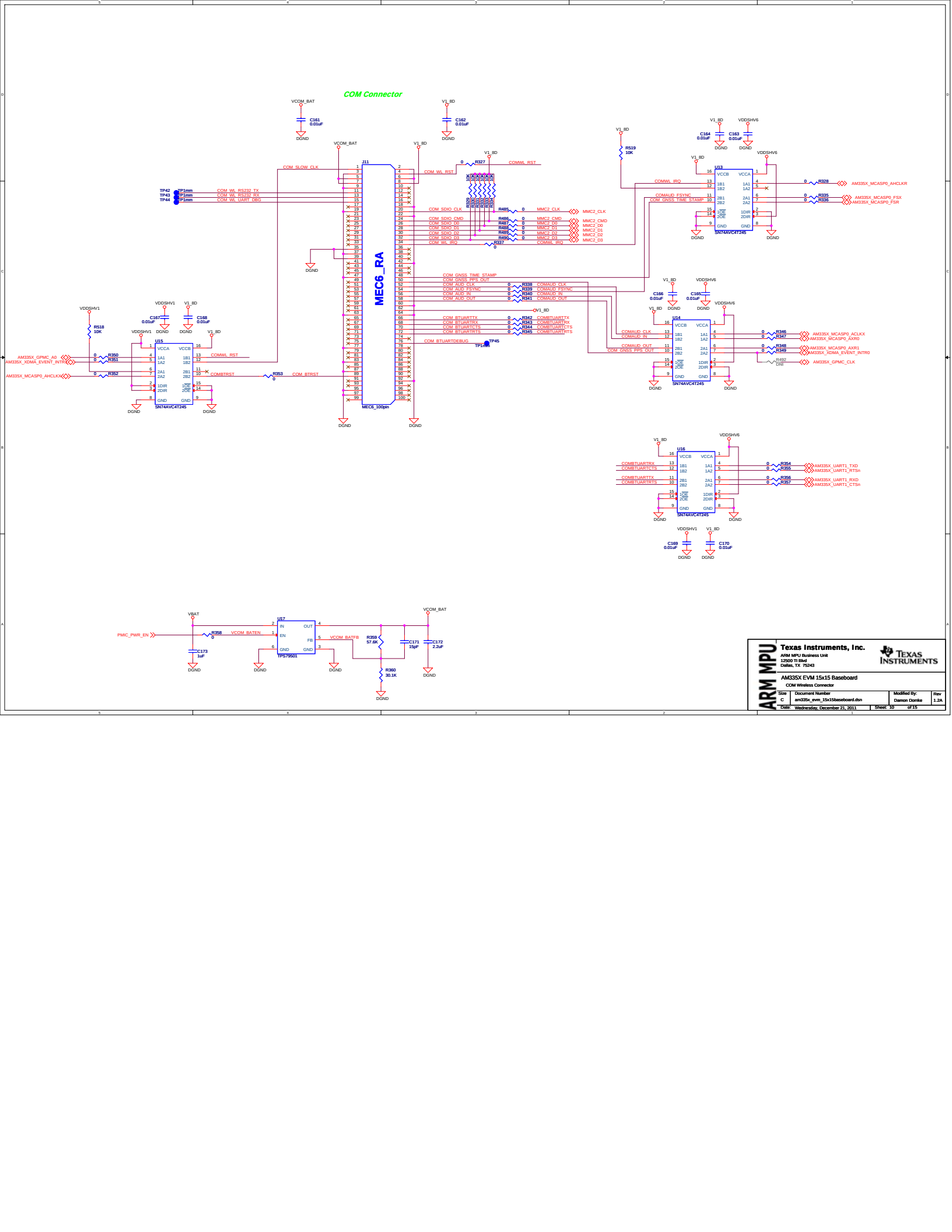
COM Connector
MEC6_RA
MEC6_100pin
SN74AVC4T245
TPS79501
VCOM_BAT
V1_8D
VDDSHV1
VDDSHV6
DGND
COM_SLOW_CLK
COM_WL_RST
COMWL_RST
COM_WL_RS232_TX
COM_WL_RS232_RX
COM_WL_UART_DBG
COM_SDIO_CLK
COM_SDIO_CMD
COM_SDIO_D0
COM_SDIO_D1
COM_SDIO_D2
COM_SDIO_D3
COMWL_IRQ
MMC2_CLK
MMC2_CMD
MMC2_D0
MMC2_D1
MMC2_D2
MMC2_D3
COM_GNSS_TIME_STAMP
COM_GNSS_PPS_OUT
COM_AUD_CLK
COM_AUD_FSYNC
COM_AUD_IN
COM_AUD_OUT
COMAUD_CLK
COMAUD_FSYNC
COMAUD_IN
COMAUD_OUT
COM_BTUARTTX
COM_BTUARTRX
COM_BTUARTCTS
COM_BTUARTRTS
COM_BTUARTDEBUG
COMBTUARTTX
COMBTUARTRX
COMBTUARTCTS
COMBTUARTRTS
COMBTRST
COM_BTRST
AM335X_GPMC_A0
AM335X_XDMA_EVENT_INTR1
AM335X_MCASP0_AHCLKX
AM335X_MCASP0_AHCLKR
AM335X_MCASP0_FSX
AM335X_MCASP0_FSR
AM335X_MCASP0_ACLKX
AM335X_MCASP0_AXR0
AM335X_MCASP0_AXR1
AM335X_XDMA_EVENT_INTR0
AM335X_GPMC_CLK
AM335X_UART1_TXD
AM335X_UART1_RTSn
AM335X_UART1_RXD
AM335X_UART1_CTSn
VBAT
PMIC_PWR_EN
VCOM_BATEN
VCOM_BATFB
Texas Instruments, Inc.
ARM MPU Business Unit
12500 TI Blvd
Dallas, TX 75243
AM335X EVM 15x15 Baseboard
COM Wireless Connector
Document Number: am335x_evm_15x15baseboard.dsn
Modified By: Damon Domke
Rev: 1.2A
Date: Wednesday, December 21, 2011
Sheet: 10 of 15

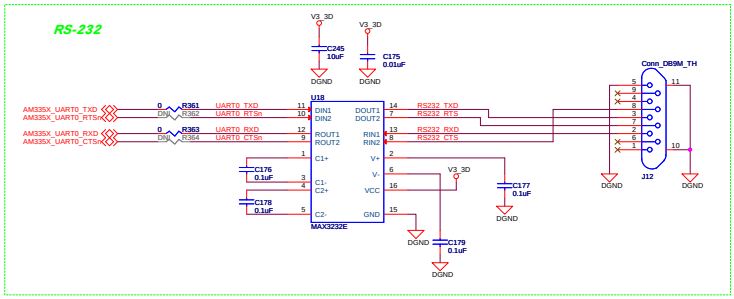


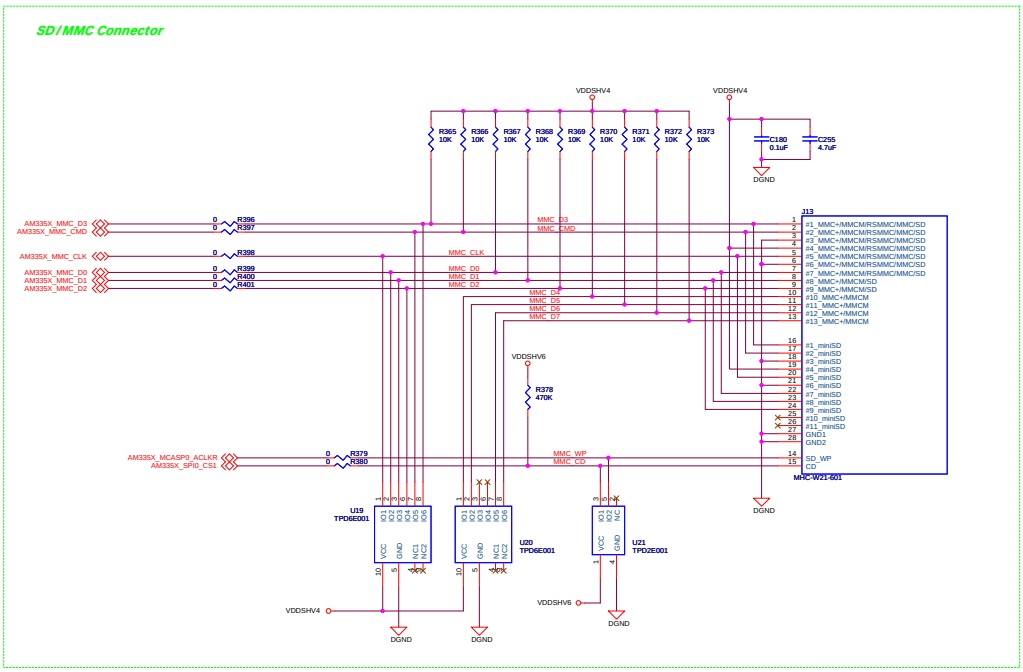


| | | | | |
|---|---|---|---|---|
| ARM MPU | **Texas Instruments, Inc.**<br>ARM MPU Business Unit<br>12500 TI Blvd<br>Dallas, TX 75243 | | | |
| | AM335X EVM 15x15 Baseboard<br>Serial & SD/MMC Interfaces | | | |
| | Size: C | Document Number: am335x_evm_15x15baseboard.dsn | Modified By: Damon Domke | Rev: 1.2A |
| | Date: Wednesday, December 21, 2011 | Sheet: 11 of 15 | | |

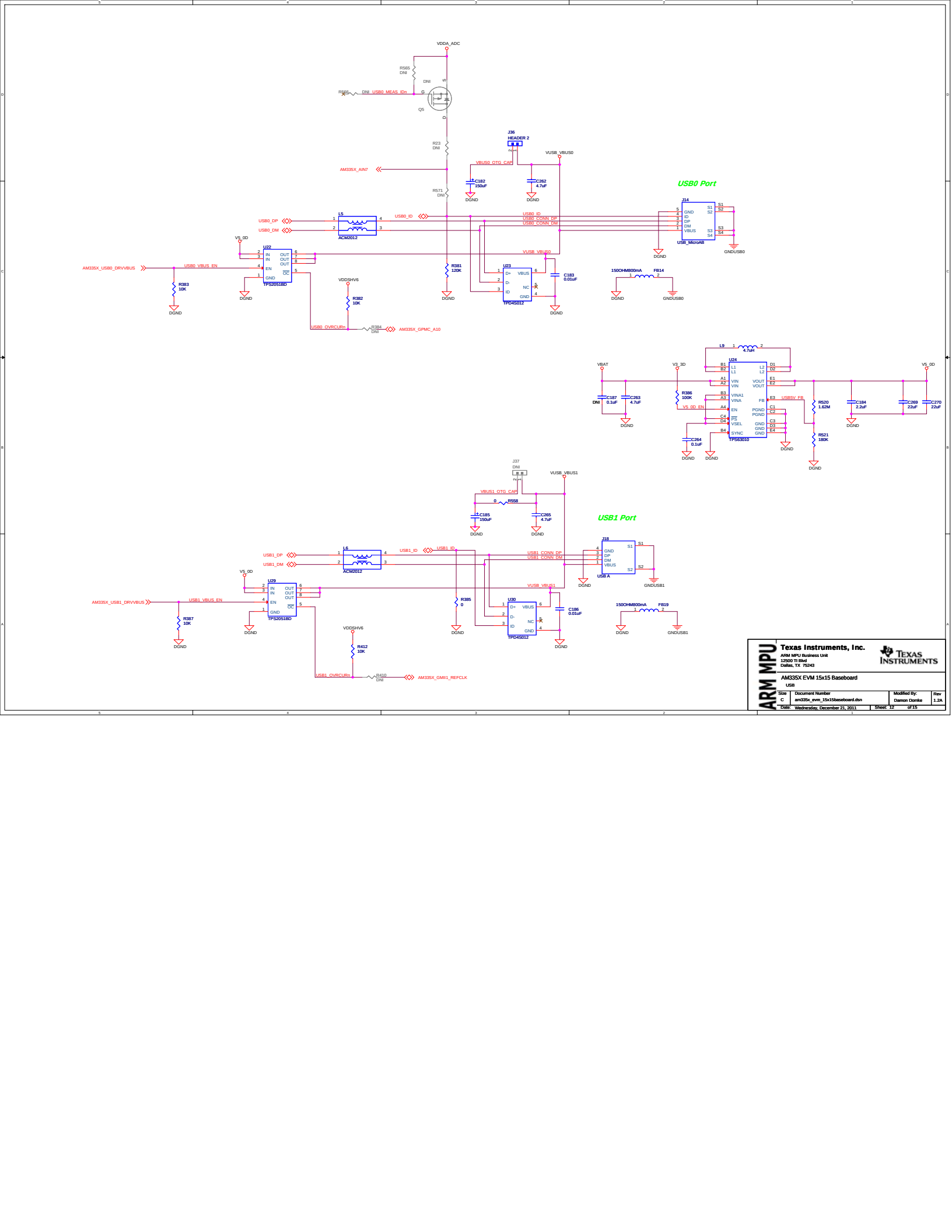


| | | | |
|---|---|---|---|
| ARM MPU | Texas Instruments, Inc.<br>ARM MPU Business Unit<br>12500 TI Blvd<br>Dallas, TX 75243 | | |
| | AM335X EVM 15x15 Baseboard<br>USB | | |
| Size: C | Document Number: am335x_evm_15x15baseboard.dsn | Modified By: Damon Domke | Rev: 1.2A |
| Date: Wednesday, December 21, 2011 | Sheet: 12 of 15 | | |

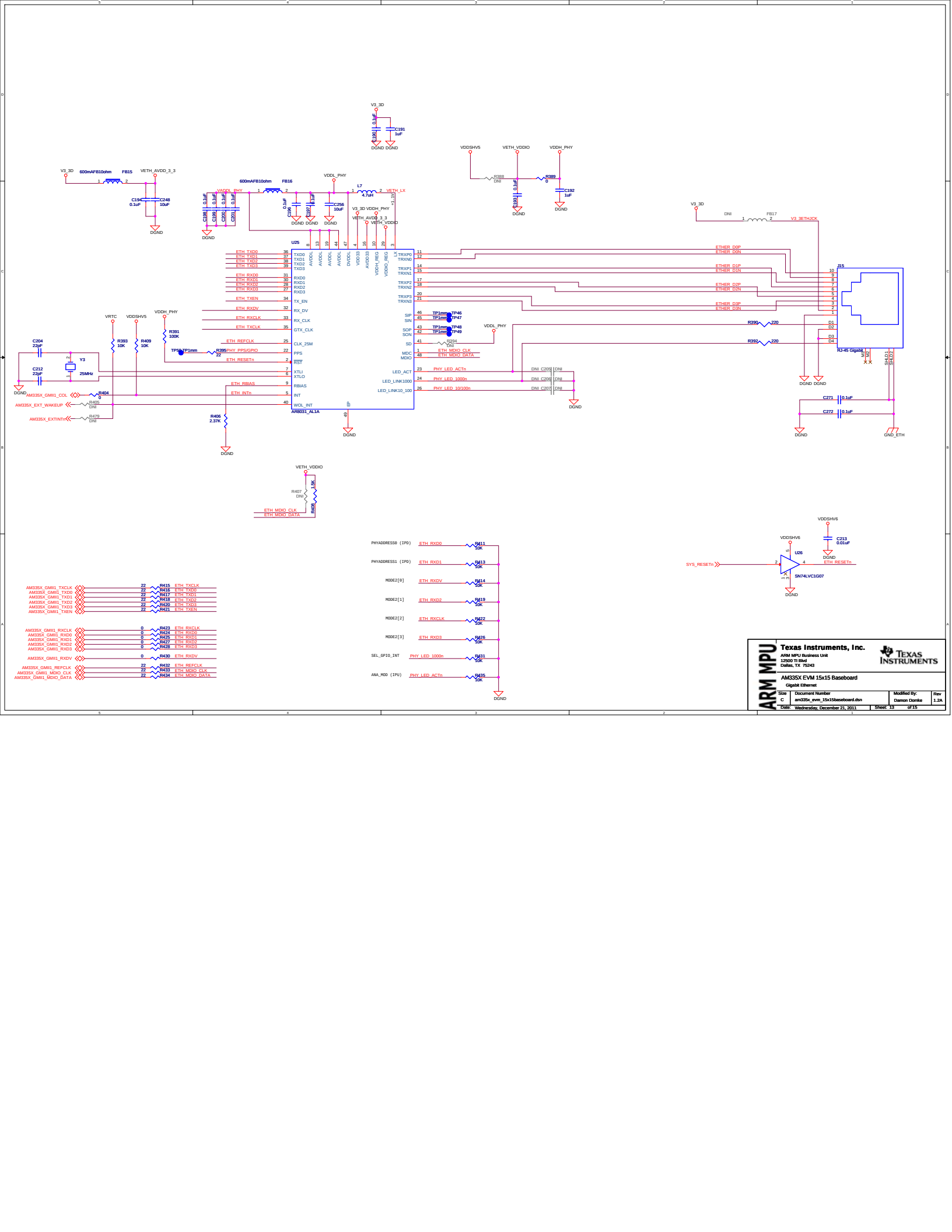
V3_3D
600mAFB10ohm
FB15
VETH_AVDD_3_3
C19 0.1uF
C248 10uF
DGND
VDDL_PHY
FB16
L7 4.7uH
VETH_LX
C196 0.1uF
C197 0.1uF
C256 10uF
C191 1uF
C190 0.1uF
VDDSHV5
VETH_VDDIO
VDDH_PHY
R388 DNI
R389 0
C193 0.1uF
C192 1uF
U25
ARB031_AL1A
ETH_TXD0
ETH_TXD1
ETH_TXD2
ETH_TXD3
ETH_RXD0
ETH_RXD1
ETH_RXD2
ETH_RXD3
ETH_TXEN
ETH_RXDV
ETH_RXCLK
ETH_TXCLK
ETH_REFCLK
PHY_PPS/GPIO
ETH_RESETn
ETH_RBIAS
ETH_INTn
AM335X_GMII1_COL
AM335X_EXT_WAKEUP
AM335X_EXTINTn
PHY_LED_ACTn
PHY_LED_1000n
PHY_LED_10/100n
LED_ACT
LED_LINK1000
LED_LINK10_100
ETHER_D0P
ETHER_D0N
ETHER_D1P
ETHER_D1N
ETHER_D2P
ETHER_D2N
ETHER_D3P
ETHER_D3N
J15
RJ-45 Gigabit
V3_3ETHJCK
R390 220
R392 220
C271 0.1uF
C272 0.1uF
GND_ETH
C204 22pF
C212 22pF
Y3 25MHz
R393 10K
R409 10K
R391 100K
R395 22
R404 0
R405 DNI
R429 DNI
R406 2.37K
R407 DNI
R408 1.5K
ETH_MDIO_CLK
ETH_MDIO_DATA
R394 DNI
DNI C205
DNI C206
DNI C207
PHYADDRESS0 (IPD)
PHYADDRESS1 (IPD)
MODE2[0]
MODE2[1]
MODE2[2]
MODE2[3]
SEL_GPIO_INT
ANA_MDD (IPU)
R411 10K
R413 10K
R414 10K
R419 10K
R422 10K
R426 10K
R431 10K
R435 10K
AM335X_GMII1_TXCLK
AM335X_GMII1_TXD0
AM335X_GMII1_TXD1
AM335X_GMII1_TXD2
AM335X_GMII1_TXD3
AM335X_GMII1_TXEN
AM335X_GMII1_RXCLK
AM335X_GMII1_RXD0
AM335X_GMII1_RXD1
AM335X_GMII1_RXD2
AM335X_GMII1_RXD3
AM335X_GMII1_RXDV
AM335X_GMII1_REFCLK
AM335X_GMII1_MDIO_CLK
AM335X_GMII1_MDIO_DATA
VDDSHV6
C213 0.01uF
U26
SN74LVC1G07
SYS_RESETn
Texas Instruments, Inc.
ARM MPU Business Unit
12500 TI Blvd
Dallas, TX 75243
AM335X EVM 15x15 Baseboard
Gigabit Ethernet
Size C
Document Number am335x_evm_15x15baseboard.dsn
Modified By: Damon Domke
Rev 1.2A
Date: Wednesday, December 21, 2011
Sheet 13 of 15

## MAVRK Connector

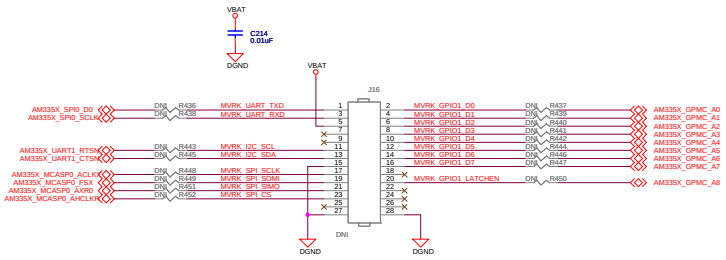


ARM MPU

**Texas Instruments, Inc.**
ARM MPU Business Unit
12500 TI Blvd
Dallas, TX 75243

TEXAS INSTRUMENTS

**AM335X EVM 15x15 Baseboard**
Analog MAVRK Connector

| Size | Document Number | Modified By: | Rev |
|---|---|---|---|
| C | am335x_evm_15x15baseboard.dsn | Damon Domke | 1.2A |

Date: Wednesday, December 21, 2011 Sheet: 14 of 15

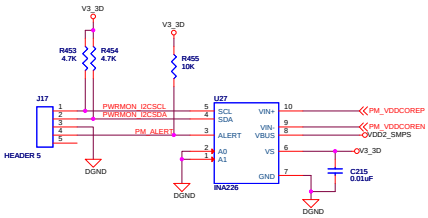

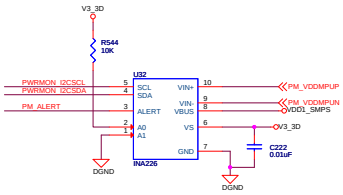

ARM MPU

**Texas Instruments, Inc.**
ARM MPU Business Unit
12500 TI Blvd
Dallas, TX 75243

TEXAS INSTRUMENTS

**AM335X EVM 15x15 Baseboard**
Power Monitor

| Size | Document Number | Modified By: | Rev |
|---|---|---|---|
| C | am335x_evm_15x15baseboard.dsn | Damon Domke | 1.2A |

Date: Wednesday, December 21, 2011 Sheet: 15 of 15