ARM MPU AM335X Base Board
15x15 Package

-See the Hardware User Guide for board details
-See the Hardware Implementation Document for design details
-See the PCB Build Specification for PCB Details

PCB1

AM335x 15x15 Base Board Bare PCB

ARM MPU

Texas Instruments, Inc.
ARM MPU Business Unit
12500 TI Blvd
Dallas, TX 75243

TEXAS INSTRUMENTS

AM335X EVM 15x15 Baseboard
Title Page

Size	Document Number	Modified By:	Rev
C	am335x_evm_15x15baseboard.dsn	Damon Domke	1.1A

Date: Thursday, November 17, 2011 Sheet: 1 of 15

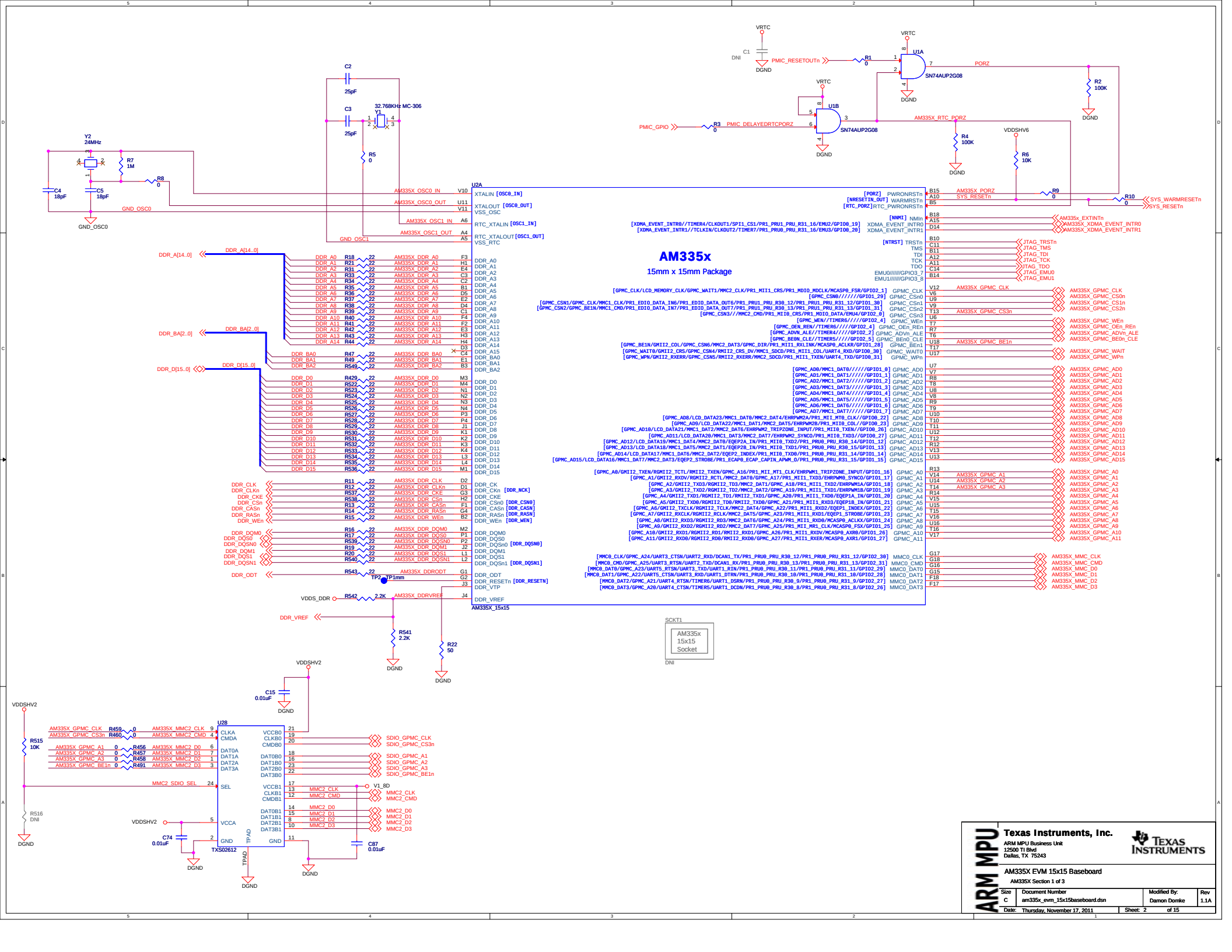
AM335x
15mm x 15mm Package
U2A
XTALIN [OSC0_IN]
XTALOUT [OSC0_OUT]
VSS_OSC
RTC_XTALIN [OSC1_IN]
RTC_XTALOUT [OSC1_OUT]
VSS_RTC
DDR_A0
DDR_A1
DDR_A2
DDR_A3
DDR_A4
DDR_A5
DDR_A6
DDR_A7
DDR_A8
DDR_A9
DDR_A10
DDR_A11
DDR_A12
DDR_A13
DDR_A14
DDR_A15
DDR_BA0
DDR_BA1
DDR_BA2
DDR_D0
DDR_D1
DDR_D2
DDR_D3
DDR_D4
DDR_D5
DDR_D6
DDR_D7
DDR_D8
DDR_D9
DDR_D10
DDR_D11
DDR_D12
DDR_D13
DDR_D14
DDR_D15
DDR_CK
DDR_CKn [DDR_NCK]
DDR_CKE
DDR_CSn0 [DDR_CSN0]
DDR_CASn [DDR_CASN]
DDR_RASn [DDR_RASN]
DDR_WEn [DDR_WEN]
DDR_DQM0
DDR_DQS0
DDR_DQSn0 [DDR_DQSN0]
DDR_DQM1
DDR_DQS1
DDR_DQSn1 [DDR_DQSN1]
DDR_ODT
DDR_RESETn [DDR_RESETN]
DDR_VTP
DDR_VREF
AM335X_15x15
[PORZ] PWRONRSTn
[NRESETIN_OUT] WARMRSTn
[RTC_PORZ]RTC_PWRONRSTn
[NMI] NMIn
XDMA_EVENT_INTR0
XDMA_EVENT_INTR1
[NTRST] TRSTn
TMS
TDI
TCK
TDO
EMU0//////GPIO3_7
EMU1//////GPIO3_8
GPMC_CLK
GPMC_CSn0
GPMC_CSn1
GPMC_CSn2
GPMC_CSn3
GPMC_WEn
GPMC_OEn_REn
GPMC_ADVn_ALE
GPMC_BE0n_CLE
GPMC_BE1n
GPMC_WAIT0
GPMC_WPn
GPMC_AD0
GPMC_AD1
GPMC_AD2
GPMC_AD3
GPMC_AD4
GPMC_AD5
GPMC_AD6
GPMC_AD7
GPMC_AD8
GPMC_AD9
GPMC_AD10
GPMC_AD11
GPMC_AD12
GPMC_AD13
GPMC_AD14
GPMC_AD15
GPMC_A0
GPMC_A1
GPMC_A2
GPMC_A3
GPMC_A4
GPMC_A5
GPMC_A6
GPMC_A7
GPMC_A8
GPMC_A9
GPMC_A10
GPMC_A11
MMC0_CLK
MMC0_CMD
MMC0_DAT0
MMC0_DAT1
MMC0_DAT2
MMC0_DAT3
SCKT1
AM335x
15x15
Socket
DNI
U1A
SN74AUP2G08
U1B
SN74AUP2G08
PMIC_RESETOUTn
PMIC_GPIO
PMIC_DELAYEDRTCPORZ
AM335X_RTC_PORZ
PORZ
VRTC
VDDSHV6
DGND
C1
DNI
R1
0
R2
100K
R3
0
R4
100K
R5
0
R6
10K
R7
1M
R8
0
R9
0
R10
0
C2
25pF
C3
25pF
Y1
32.768KHz MC-306
Y2
24MHz
C4
18pF
C5
18pF
GND_OSC0
GND_OSC1
AM335X_OSC0_IN
AM335X_OSC0_OUT
AM335X_OSC1_IN
AM335X_OSC1_OUT
SYS_WARMRESETn
SYS_RESETn
AM335x_EXTINTn
AM335X_XDMA_EVENT_INTR0
AM335X_XDMA_EVENT_INTR1
JTAG_TRSTn
JTAG_TMS
JTAG_TDI
JTAG_TCK
JTAG_TDO
JTAG_EMU0
JTAG_EMU1
AM335X_GPMC_CLK
AM335X_GPMC_CS0n
AM335X_GPMC_CS1n
AM335X_GPMC_CS2n
AM335X_GPMC_CS3n
AM335X_GPMC_WEn
AM335X_GPMC_OEn_REn
AM335X_GPMC_ADVn_ALE
AM335X_GPMC_BE0n_CLE
AM335X_GPMC_BE1n
AM335X_GPMC_WAIT
AM335X_GPMC_WPn
AM335X_GPMC_AD0
AM335X_GPMC_AD1
AM335X_GPMC_AD2
AM335X_GPMC_AD3
AM335X_GPMC_AD4
AM335X_GPMC_AD5
AM335X_GPMC_AD6
AM335X_GPMC_AD7
AM335X_GPMC_AD8
AM335X_GPMC_AD9
AM335X_GPMC_AD10
AM335X_GPMC_AD11
AM335X_GPMC_AD12
AM335X_GPMC_AD13
AM335X_GPMC_AD14
AM335X_GPMC_AD15
AM335X_GPMC_A0
AM335X_GPMC_A1
AM335X_GPMC_A2
AM335X_GPMC_A3
AM335X_GPMC_A4
AM335X_GPMC_A5
AM335X_GPMC_A6
AM335X_GPMC_A7
AM335X_GPMC_A8
AM335X_GPMC_A9
AM335X_GPMC_A10
AM335X_GPMC_A11
AM335X_MMC_CLK
AM335X_MMC_CMD
AM335X_MMC_D0
AM335X_MMC_D1
AM335X_MMC_D2
AM335X_MMC_D3
DDR_A[14..0]
DDR_BA[2..0]
DDR_D[15..0]
DDR_CLK
DDR_CLKn
DDR_CKE
DDR_CSn
DDR_CASn
DDR_RASn
DDR_WEn
DDR_DQM0
DDR_DQS0
DDR_DQSN0
DDR_DQM1
DDR_DQS1
DDR_DQSN1
DDR_ODR
DDR_VREF
VDDS_DDR
R541
2.2K
R22
50
TP2
TP1mm
U28
TXS02612
SDIO_GPMC_CLK
SDIO_GPMC_CS3n
SDIO_GPMC_A1
SDIO_GPMC_A2
SDIO_GPMC_A3
SDIO_GPMC_BE1n
MMC2_CLK
MMC2_CMD
MMC2_D0
MMC2_D1
MMC2_D2
MMC2_D3
MMC2_SDIO_SEL
V1_8D
VDDSHV2
R515
10K
R516
DNI
C15
0.01uF
C74
0.01uF
C87
0.01uF
TPAD
Texas Instruments, Inc.
ARM MPU Business Unit
12500 TI Blvd
Dallas, TX 75243
TEXAS INSTRUMENTS
ARM MPU
AM335X EVM 15x15 Baseboard
AM335X Section 1 of 3
Size
C
Document Number
am335x_evm_15x15baseboard.dsn
Modified By:
Damon Domke
Rev
1.1A
Date:
Thursday, November 17, 2011
Sheet: 2 of 15

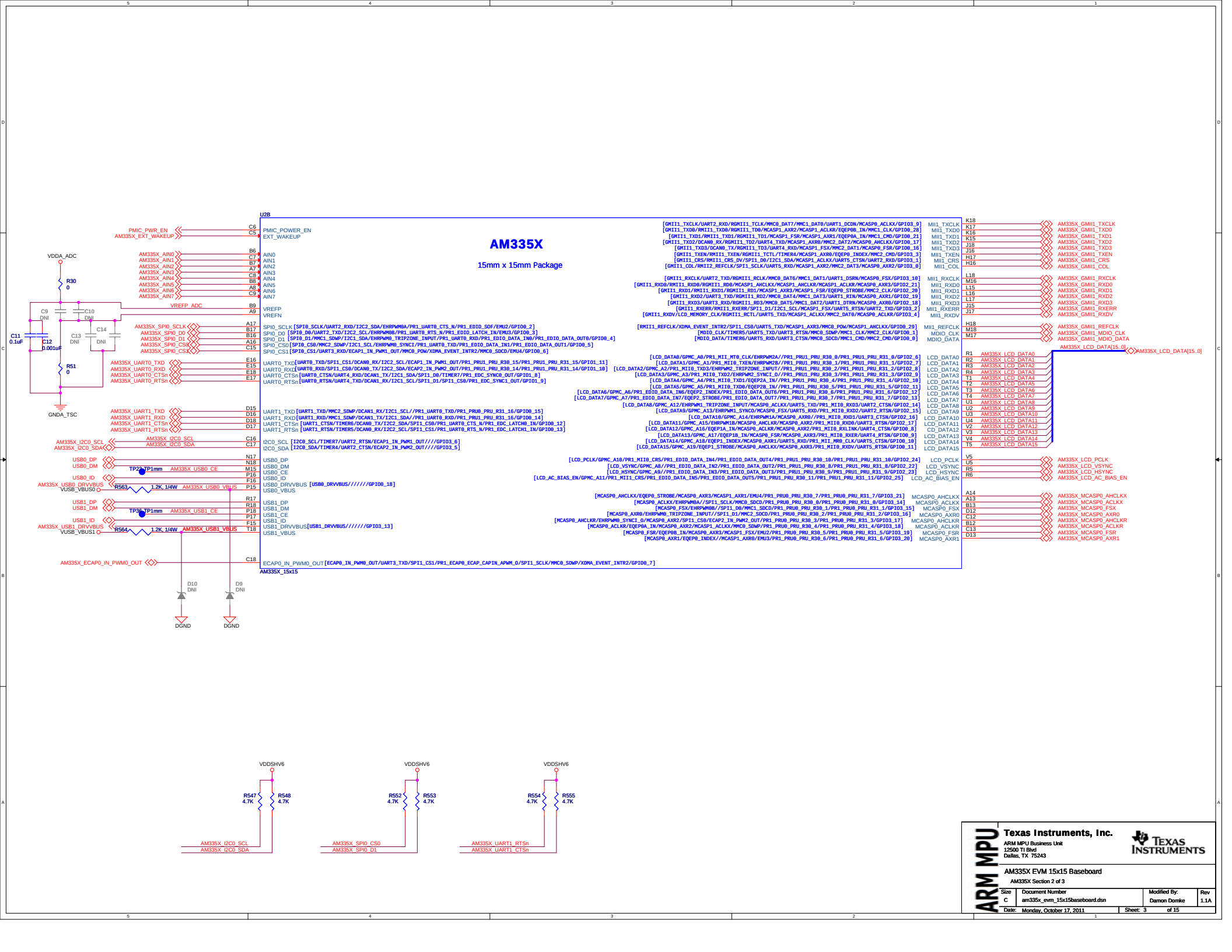
U2B
AM335X
15mm x 15mm Package
AM335X_15x15
PMIC_PWR_EN
AM335X_EXT_WAKEUP
PMIC_POWER_EN
EXT_WAKEUP
VDDA_ADC
R30
0
C9
DNI
C10
DNI
C11
0.1uF
C12
0.001uF
C13
DNI
C14
DNI
R51
0
GNDA_TSC
VREFP_ADC
VREFP
VREFN
AIN0
AIN1
AIN2
AIN3
AIN4
AIN5
AIN6
AIN7
SPI0_SCLK
SPI0_D0
SPI0_D1
SPI0_CS0
SPI0_CS1
UART0_TXD
UART0_RXD
UART0_CTSn
UART0_RTSn
UART1_TXD
UART1_RXD
UART1_CTSn
UART1_RTSn
I2C0_SCL
I2C0_SDA
USB0_DP
USB0_DM
USB0_CE
USB0_ID
USB0_DRVVBUS
USB0_VBUS
USB1_DP
USB1_DM
USB1_CE
USB1_ID
USB1_DRVVBUS
USB1_VBUS
ECAP0_IN_PWM0_OUT
D10
DNI
D9
DNI
DGND
DGND
VDDSHV6
R547
4.7K
R548
4.7K
R552
4.7K
R553
4.7K
R554
4.7K
R555
4.7K
AM335X_I2C0_SCL
AM335X_I2C0_SDA
AM335X_SPI0_CS0
AM335X_SPI0_D1
AM335X_UART1_RTSn
AM335X_UART1_CTSn
Texas Instruments, Inc.
ARM MPU Business Unit
12500 TI Blvd
Dallas, TX 75243
ARM MPU
AM335X EVM 15x15 Baseboard
AM335X Section 2 of 3
Size C
Document Number am335x_evm_15x15baseboard.dsn
Modified By: Damon Domke
Rev 1.1A
Date: Monday, October 17, 2011
Sheet: 3 of 15

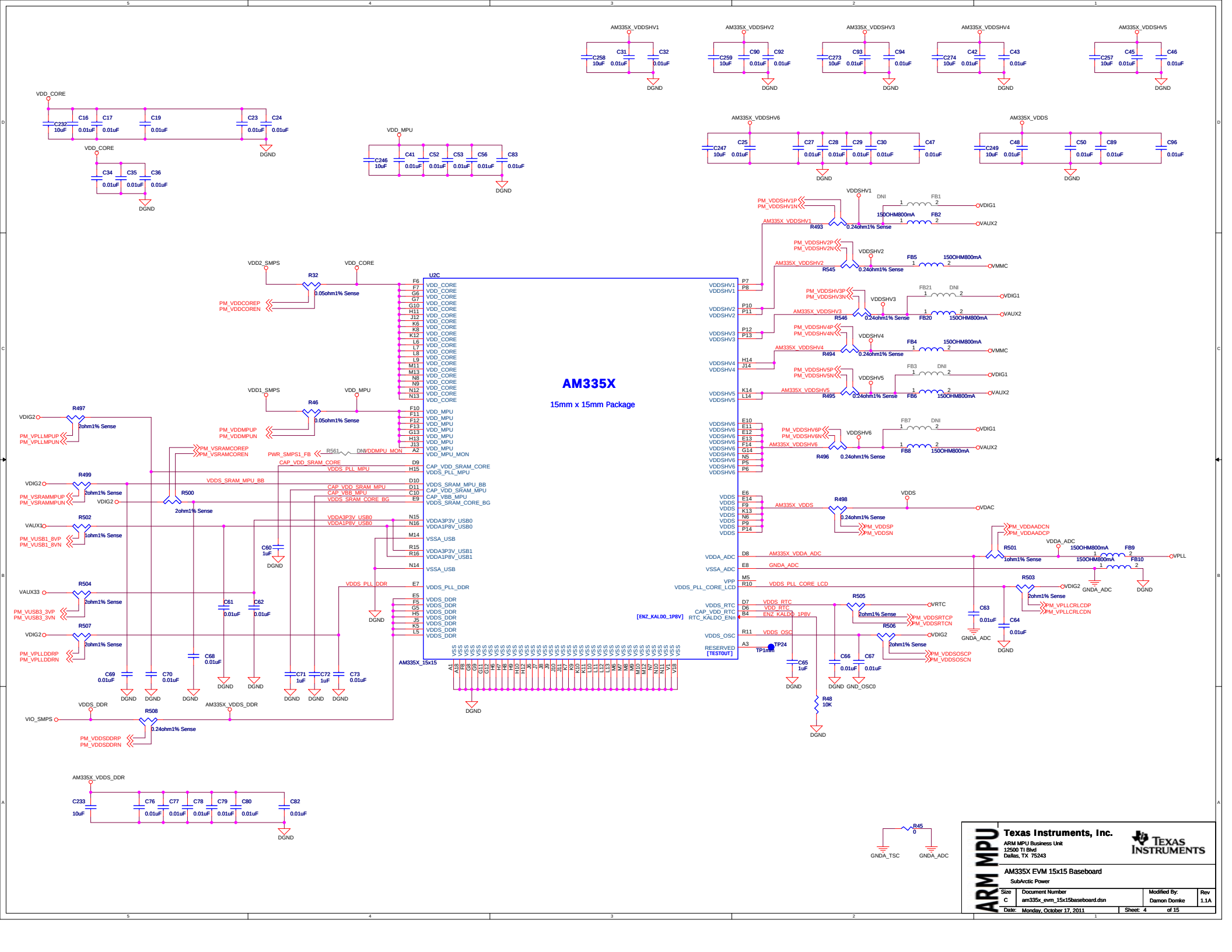

Texas Instruments, Inc.
ARM MPU Business Unit
12500 TI Blvd
Dallas, TX 75243

ARM MPU

AM335X EVM 15x15 Baseboard

SubArctic Power

Size	Document Number	Modified By:	Rev
C	am335x_evm_15x15baseboard.dsn	Damon Domke	1.1A
Date: Monday, October 17, 2011		Sheet: 4 of 15	

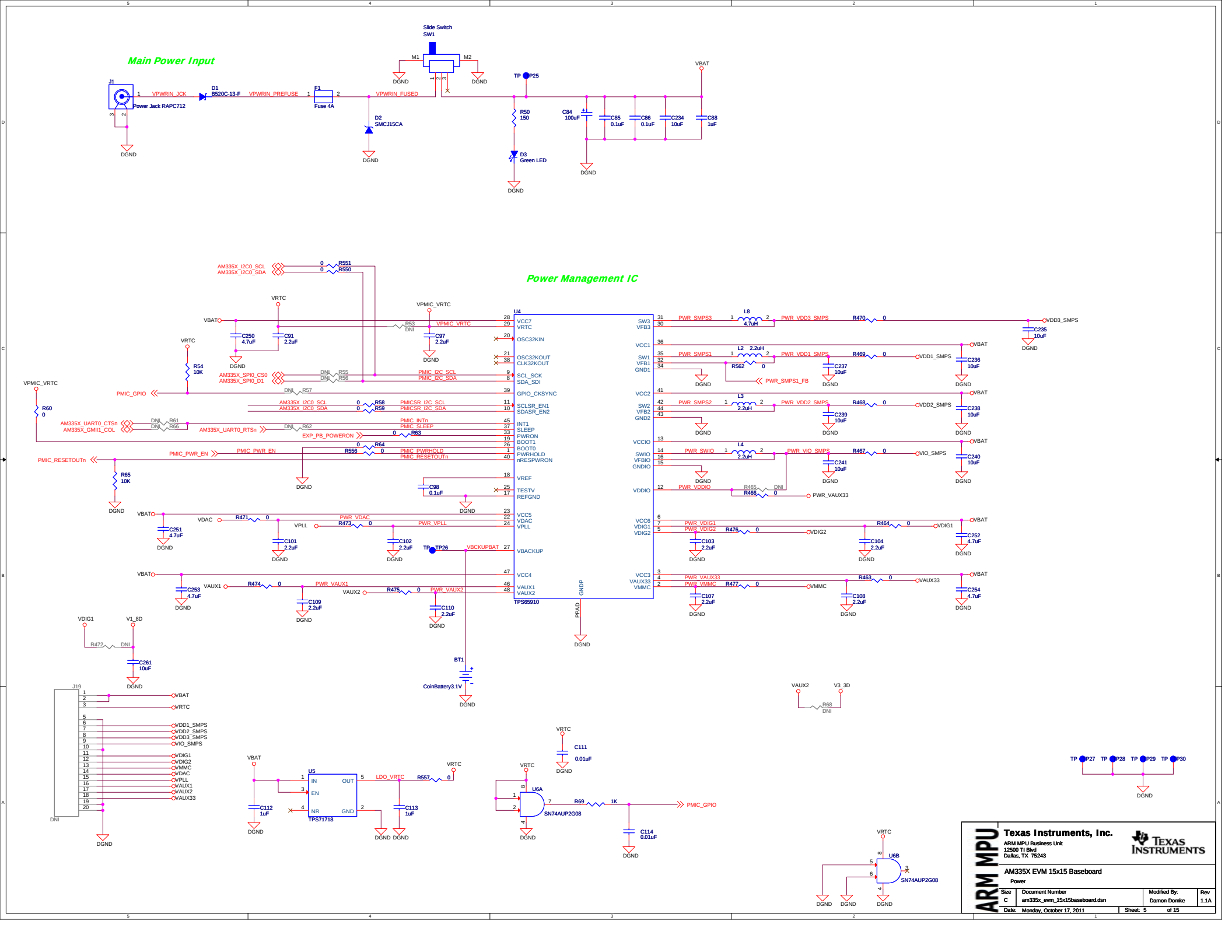

Texas Instruments, Inc.
ARM MPU Business Unit
12500 TI Blvd
Dallas, TX 75243

TEXAS INSTRUMENTS

ARM MPU

AM335X EVM 15x15 Baseboard

Power

Size	Document Number	Modified By:	Rev
C	am335x_evm_15x15baseboard.dsn	Damon Domke	1.1A

Date: Monday, October 17, 2011 Sheet: 5 of 15

ID Memory

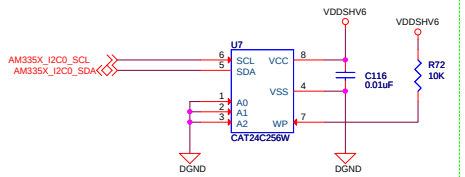

JTAG Connector

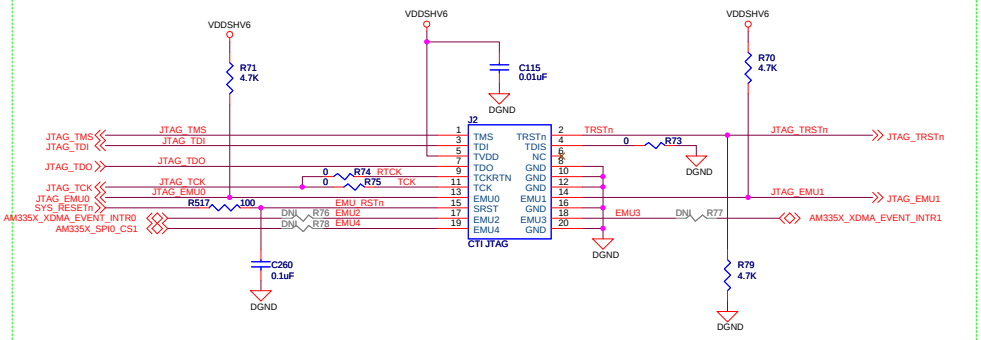

User LED's

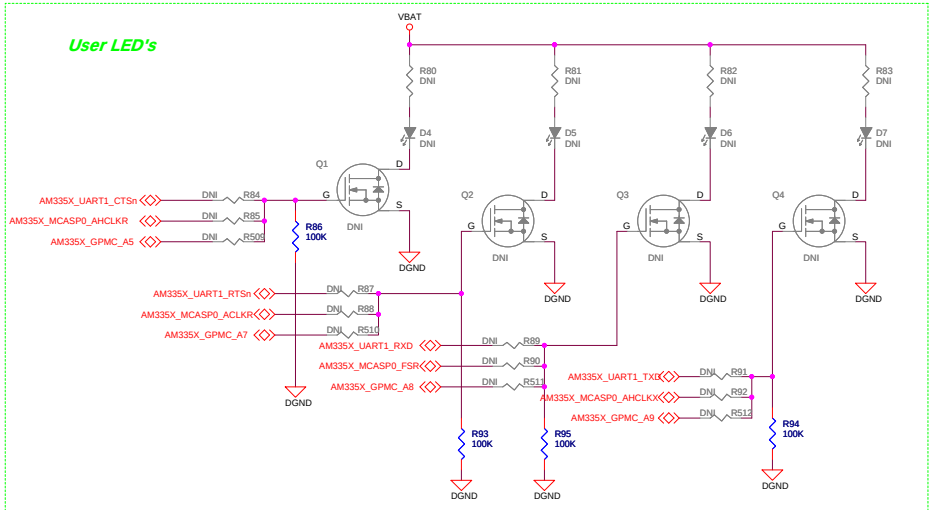

Clockout Measurement Testpoints

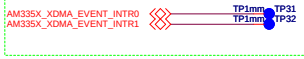

ADC Test

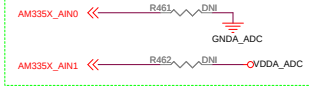

User Reset / Interrupt Switches

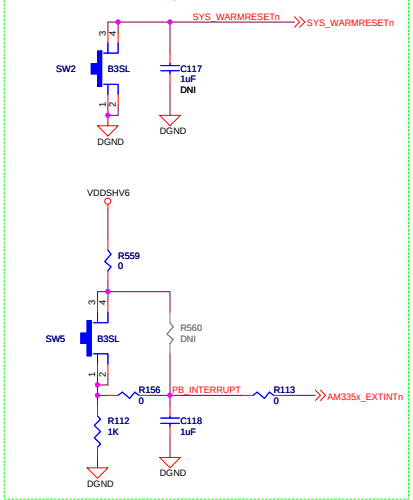

Boot Configuration

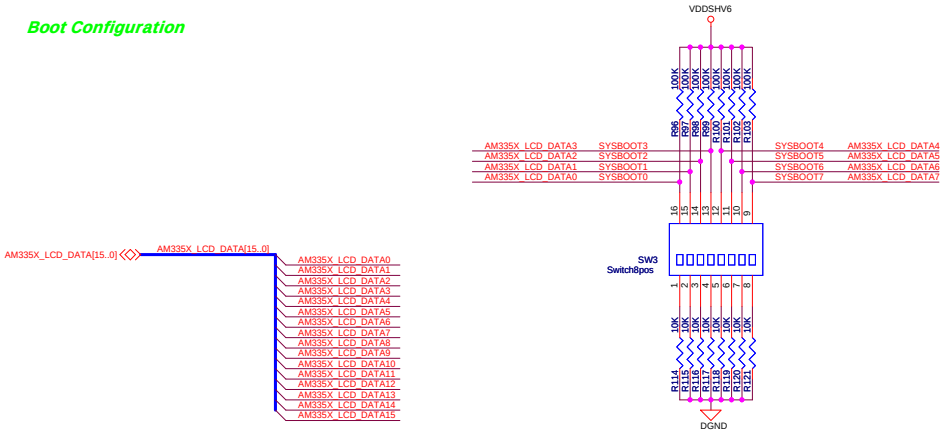

ARM MPU

Texas Instruments, Inc.
ARM MPU Business Unit
12500 TI Blvd
Dallas, TX 75243

AM335X EVM 15x15 Baseboard
Debug/Configuration

Size	Document Number	Modified By:	Rev
C	am335x_evm_15x15baseboard.dsn	Damon Domke	1.1A
Date: Monday, October 17, 2011		Sheet: 6 of 15	

DDR2 SDRAM

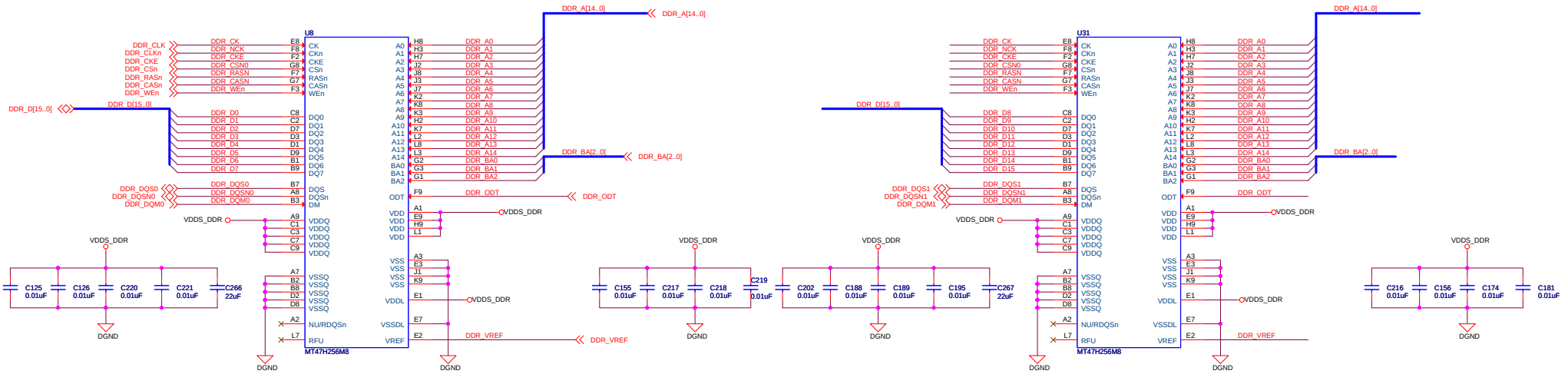

NAND Memory

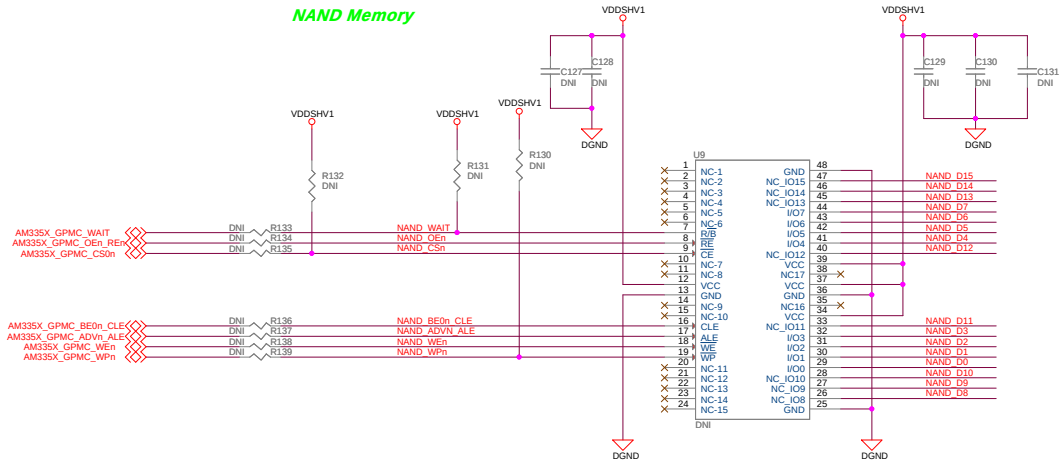

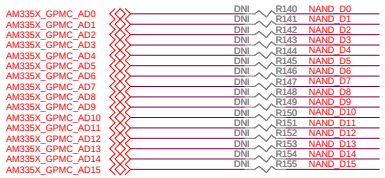

ARM MPU

Texas Instruments, Inc.
ARM MPU Business Unit
12500 TI Blvd
Dallas, TX 75243

TEXAS INSTRUMENTS

AM335X EVM 15x15 Baseboard
Memory

Size	Document Number	Modified By:	Rev
C	am335x_evm_15x15baseboard.dsn	Damon Domke	1.1A
Date: Monday, October 17, 2011		Sheet: 7 of 15	

Expansion Connector - EXP0

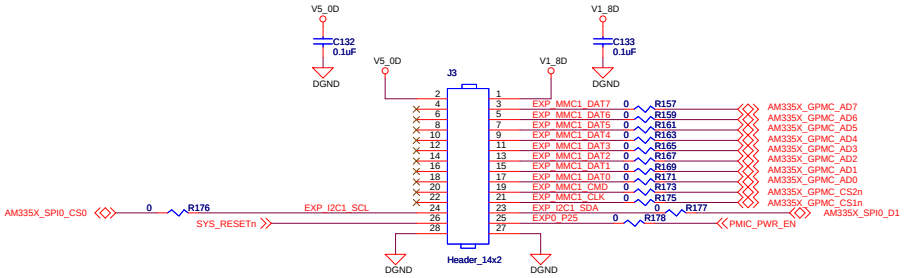

Expansion Connector - EXP1

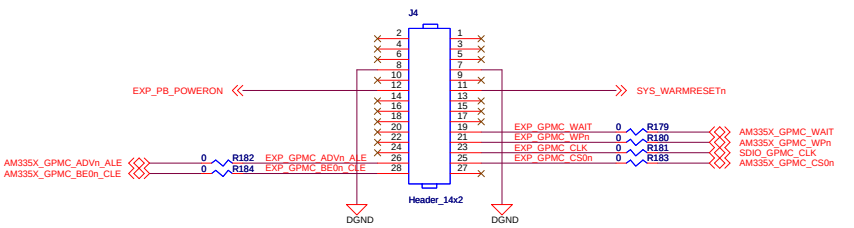

Expansion Connector - EXP2

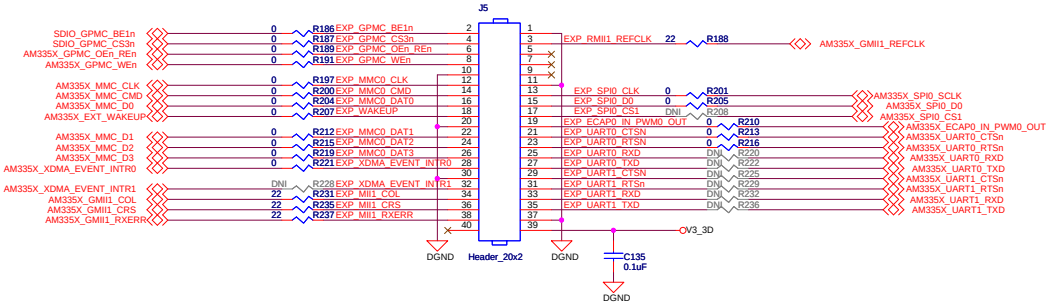

Expansion Connector - EXP3

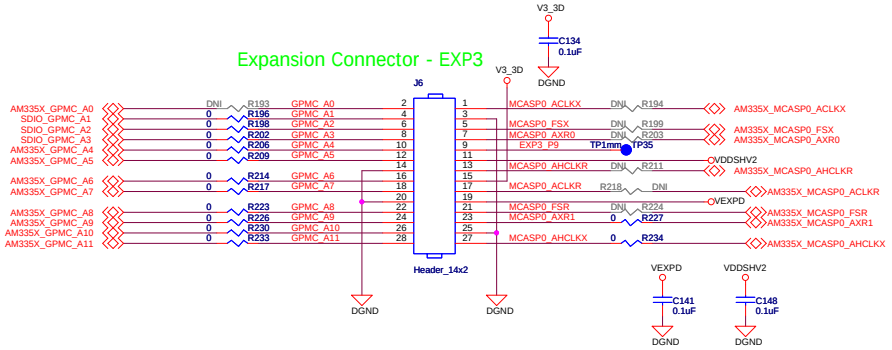

ARM MPU

Texas Instruments, Inc.
ARM MPU Business Unit
12500 TI Blvd
Dallas, TX 75243

TEXAS INSTRUMENTS

AM335X EVM 15x15 Baseboard
Expansion Connectors

Size	Document Number	Modified By:	Rev
C	am335x_evm_15x15baseboard.dsn	Damon Domke	1.1A
Date: Monday, October 17, 2011		Sheet: 8 of 15	

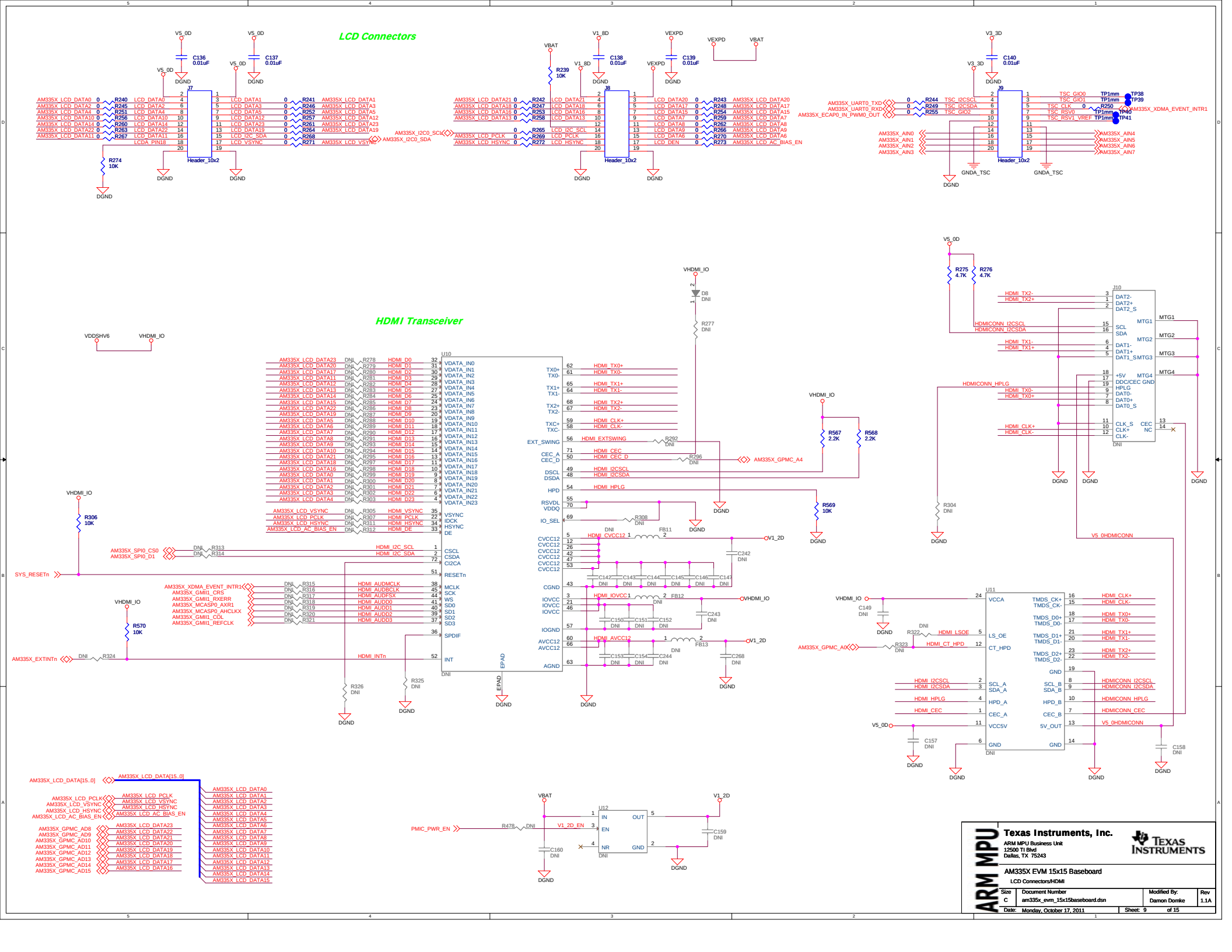
LCD Connectors
HDMI Transceiver
U10
U11
U12
J7
J8
J9
J10
Header_10x2
Texas Instruments, Inc.
ARM MPU Business Unit
12500 TI Blvd
Dallas, TX 75243
ARM MPU
AM335X EVM 15x15 Baseboard
LCD Connectors/HDMI
Size C
Document Number am335x_evm_15x15baseboard.dsn
Modified By: Damon Domke
Rev 1.1A
Date: Monday, October 17, 2011
Sheet: 9 of 15

COM Connector

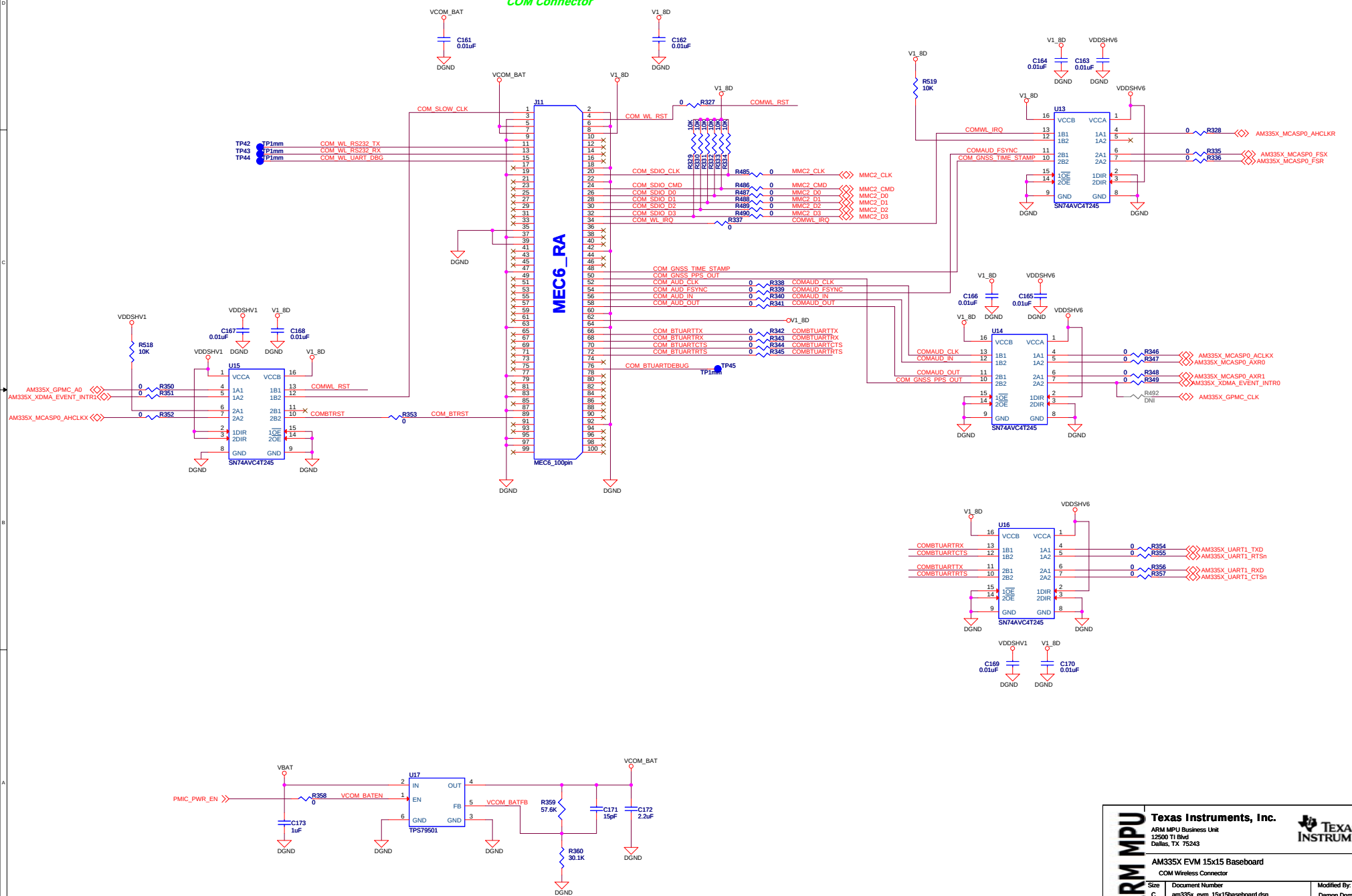

Texas Instruments, Inc.
ARM MPU Business Unit
12500 TI Blvd
Dallas, TX 75243

ARM MPU

AM335X EVM 15x15 Baseboard

COM Wireless Connector

Size	Document Number	Modified By:	Rev
C	am335x_evm_15x15baseboard.dsn	Damon Domke	1.1A
Date: Monday, October 17, 2011		Sheet: 10 of 15	

RS-232

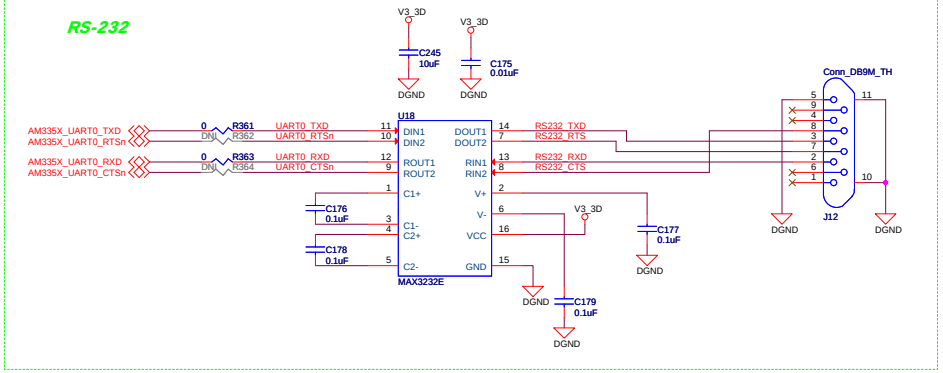

SD/MMC Connector

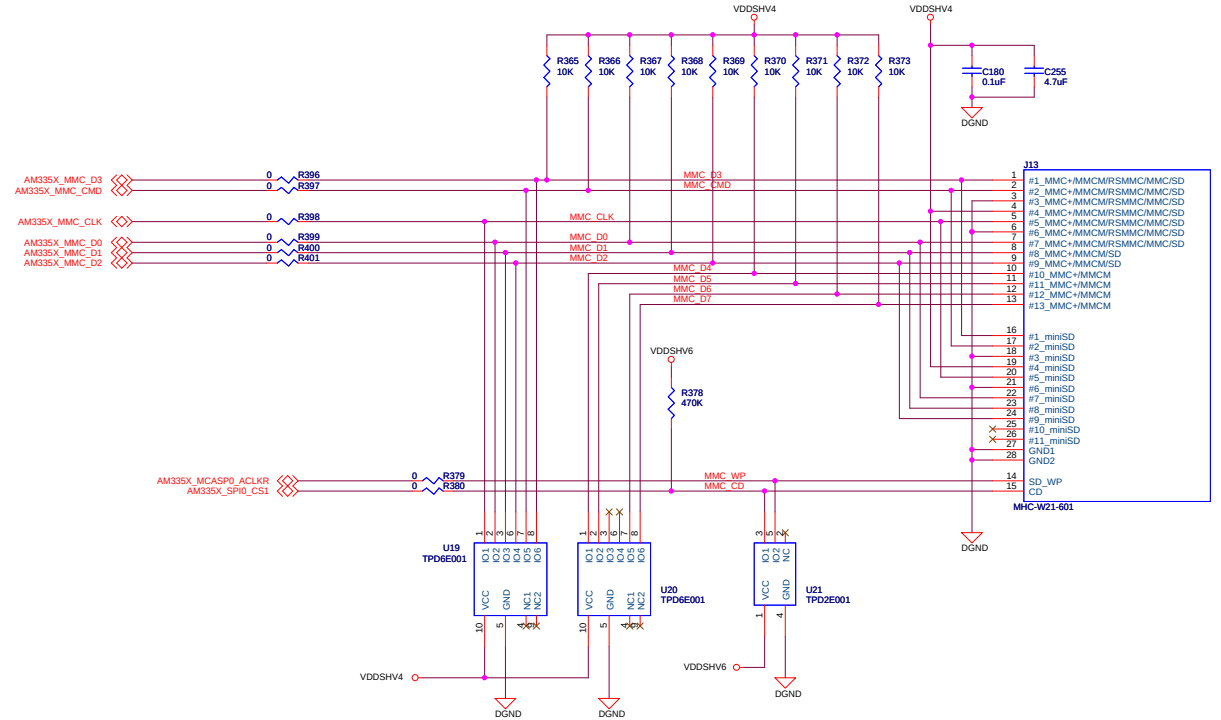

ARM MPU

Texas Instruments, Inc.
ARM MPU Business Unit
12500 TI Blvd
Dallas, TX 75243

AM335X EVM 15x15 Baseboard
Serial & SDMMC Interfaces

Size	Document Number	Modified By:	Rev
C	am335x_evm_15x15baseboard.dsn	Damon Domke	1.1A
Date: Monday, October 17, 2011		Sheet: 11 of 15	

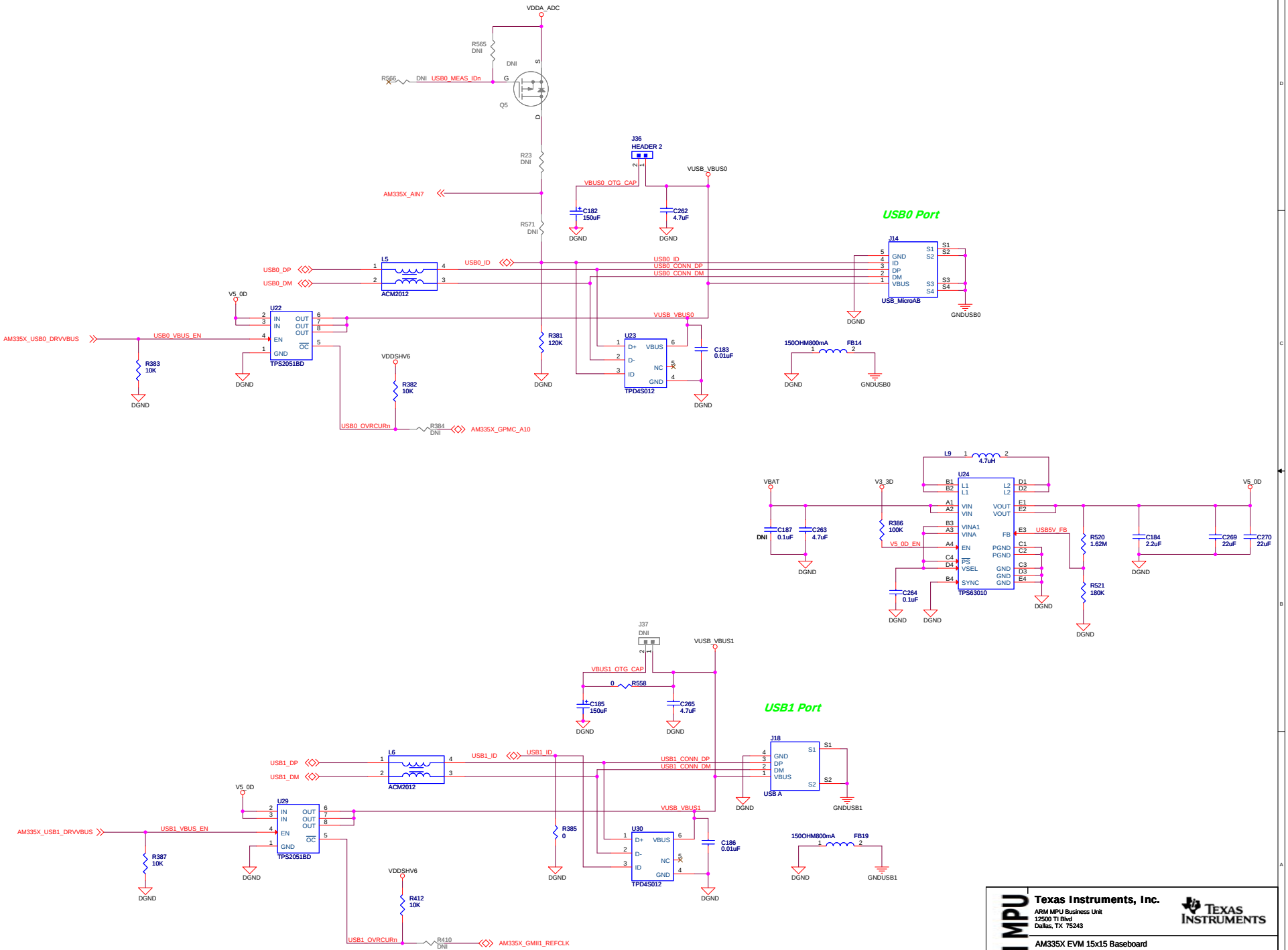

ARM MPU

Texas Instruments, Inc.
ARM MPU Business Unit
12500 TI Blvd
Dallas, TX 75243

AM335X EVM 15x15 Baseboard
USB

Size	Document Number	Modified By:	Rev
C	am335x_evm_15x15baseboard.dsn	Damon Domke	1.1A
Date: Monday, October 17, 2011		Sheet: 12 of 15	

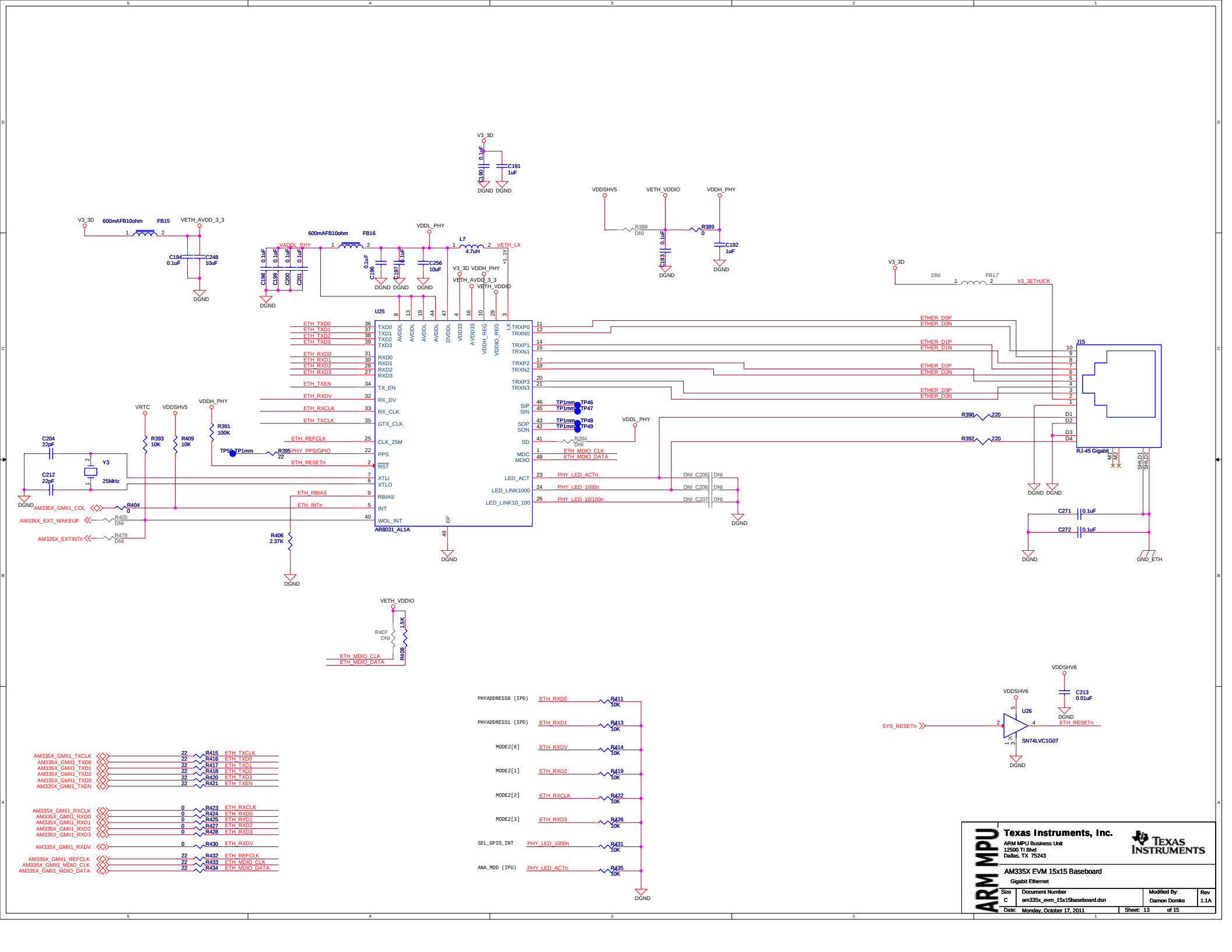
V3_3D
600mAFB10ohm
FB15
VETH_AVDD_3_3
C194 0.1uF
C248 10uF
DGND
VDDL_PHY
600mAFB10ohm
FB16
C198 0.1uF
C199 0.1uF
C200 0.1uF
C201 0.1uF
C196 0.1uF
C197 0.1uF
C256 10uF
L7 4.7uH
VETH_LX
+1.1V
V3_3D
C190 0.1uF
C191 1uF
VDDSHV5
VETH_VDDIO
VDDH_PHY
R388 DNI
R389 0
C193 0.1uF
C192 1uF
V3_3D
DNI
FB17
V3_3ETHJCK
U25
AR8031_AL1A
ETH_TXD0
ETH_TXD1
ETH_TXD2
ETH_TXD3
ETH_RXD0
ETH_RXD1
ETH_RXD2
ETH_RXD3
ETH_TXEN
ETH_RXDV
ETH_RXCLK
ETH_TXCLK
ETH_REFCLK
PHY_PPS/GPIO
ETH_RESETn
ETH_RBIAS
ETH_INTn
TXD0
TXD1
TXD2
TXD3
RXD0
RXD1
RXD2
RXD3
TX_EN
RX_DV
RX_CLK
GTX_CLK
CLK_25M
PPS
RST
XTLI
XTLO
RBIAS
INT
WOL_INT
EP
TRXP0
TRXN0
TRXP1
TRXN1
TRXP2
TRXN2
TRXP3
TRXN3
SIP
SIN
SOP
SON
SD
MDC
MDIO
LED_ACT
LED_LINK1000
LED_LINK10_100
ETHER_D0P
ETHER_D0N
ETHER_D1P
ETHER_D1N
ETHER_D2P
ETHER_D2N
ETHER_D3P
ETHER_D3N
TP1mm TP46
TP1mm TP47
TP1mm TP48
TP1mm TP49
R394 DNI
ETH_MDIO_CLK
ETH_MDIO_DATA
PHY_LED_ACTn
PHY_LED_1000n
PHY_LED_10/100n
DNI C205
DNI C206
DNI C207
R390 220
R392 220
J15
RJ-45 Gigabit
SHLD1
SHLD2
C271 0.1uF
C272 0.1uF
GND_ETH
VRTC
VDDSHV5
VDDH_PHY
R391 100K
R393 10K
R409 10K
C204 22pF
C212 22pF
Y3
25MHz
TP50 TP1mm
R395 22
PHY_PPS/GPIO
AM335X_GMII1_COL
R404 0
AM335X_EXT_WAKEUP
R405 DNI
AM335X_EXTINTn
R479 DNI
R406 2.37K
VETH_VDDIO
R407 DNI
1.5K
R408
ETH_MDIO_CLK
ETH_MDIO_DATA
PHYADDRESS0 (IPD)
PHYADDRESS1 (IPD)
MODE2[0]
MODE2[1]
MODE2[2]
MODE2[3]
SEL_GPIO_INT
ANA_MOD (IPU)
R411 10K
R413 10K
R414 10K
R419 10K
R422 10K
R426 10K
R431 10K
R435 10K
AM335X_GMII1_TXCLK
AM335X_GMII1_TXD0
AM335X_GMII1_TXD1
AM335X_GMII1_TXD2
AM335X_GMII1_TXD3
AM335X_GMII1_TXEN
R415 ETH_TXCLK
R416 ETH_TXD0
R417 ETH_TXD1
R418 ETH_TXD2
R420 ETH_TXD3
R421 ETH_TXEN
AM335X_GMII1_RXCLK
AM335X_GMII1_RXD0
AM335X_GMII1_RXD1
AM335X_GMII1_RXD2
AM335X_GMII1_RXD3
R423 ETH_RXCLK
R424 ETH_RXD0
R425 ETH_RXD1
R427 ETH_RXD2
R428 ETH_RXD3
AM335X_GMII1_RXDV
R430 ETH_RXDV
AM335X_GMII1_REFCLK
AM335X_GMII1_MDIO_CLK
AM335X_GMII1_MDIO_DATA
R432 ETH_REFCLK
R433 ETH_MDIO_CLK
R434 ETH_MDIO_DATA
VDDSHV6
C213 0.01uF
U26
SN74LVC1G07
SYS_RESETn
ETH_RESETn
Texas Instruments, Inc.
ARM MPU Business Unit
12500 TI Blvd
Dallas, TX 75243
AM335X EVM 15x15 Baseboard
Gigabit Ethernet
Size C
Document Number am335x_evm_15x15baseboard.dsn
Modified By: Damon Domke
Rev 1.1A
Date: Monday, October 17, 2011
Sheet: 13 of 15

MAVRK Connector

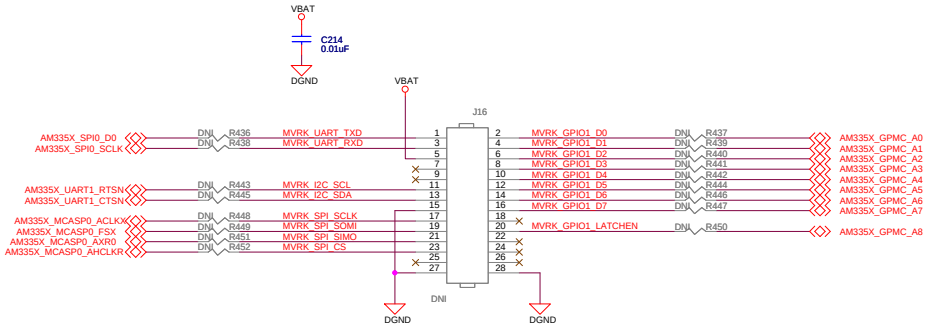

ARM MPU

Texas Instruments, Inc.
ARM MPU Business Unit
12500 TI Blvd
Dallas, TX 75243

TEXAS INSTRUMENTS

AM335X EVM 15x15 Baseboard
Analog MAVRK Connector

Size	Document Number	Modified By:	Rev
C	am335x_evm_15x15baseboard.dsn	Damon Domke	1.1A
Date: Monday, October 17, 2011		Sheet: 14 of 15	

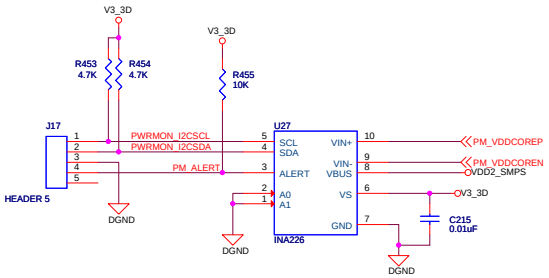

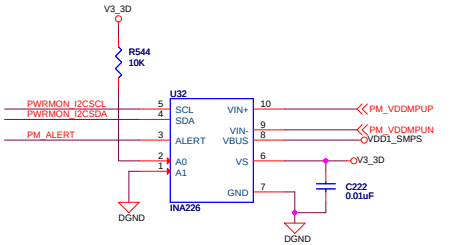

ARM MPU

Texas Instruments, Inc.
ARM MPU Business Unit
12500 TI Blvd
Dallas, TX 75243

TEXAS INSTRUMENTS

AM335X EVM 15x15 Baseboard
Power Monitor

Size	Document Number	Modified By:	Rev
C	am335x_evm_15x15baseboard.dsn	Damon Domke	1.1A
Date: Monday, October 17, 2011		Sheet: 15 of 15	