ARM MPU AM335X General Purpose EVM
Base Board
ZCZ Package

-See the Hardware User Guide for board details
-See the Hardware Implementation Document for design details
-See the PCB Build Specification for PCB Details
-See the EVM Errata Document for Known Issues

PCB1

AM335x 15x15 Base Board Bare PCB

ARM MPU

Texas Instruments, Inc.
ARM MPU Business Unit
12500 TI Blvd
Dallas, TX 75243

TEXAS INSTRUMENTS

Final

AM335X General Purpose EVM ZCZ Baseboard

Title Page

Size	Document Number	Modified By:	Rev
C	am335x_gpevm_zczbaseboard.dsn	Damon Domke	1.5A

Date: Monday, August 27, 2012 Sheet: 1 of 16

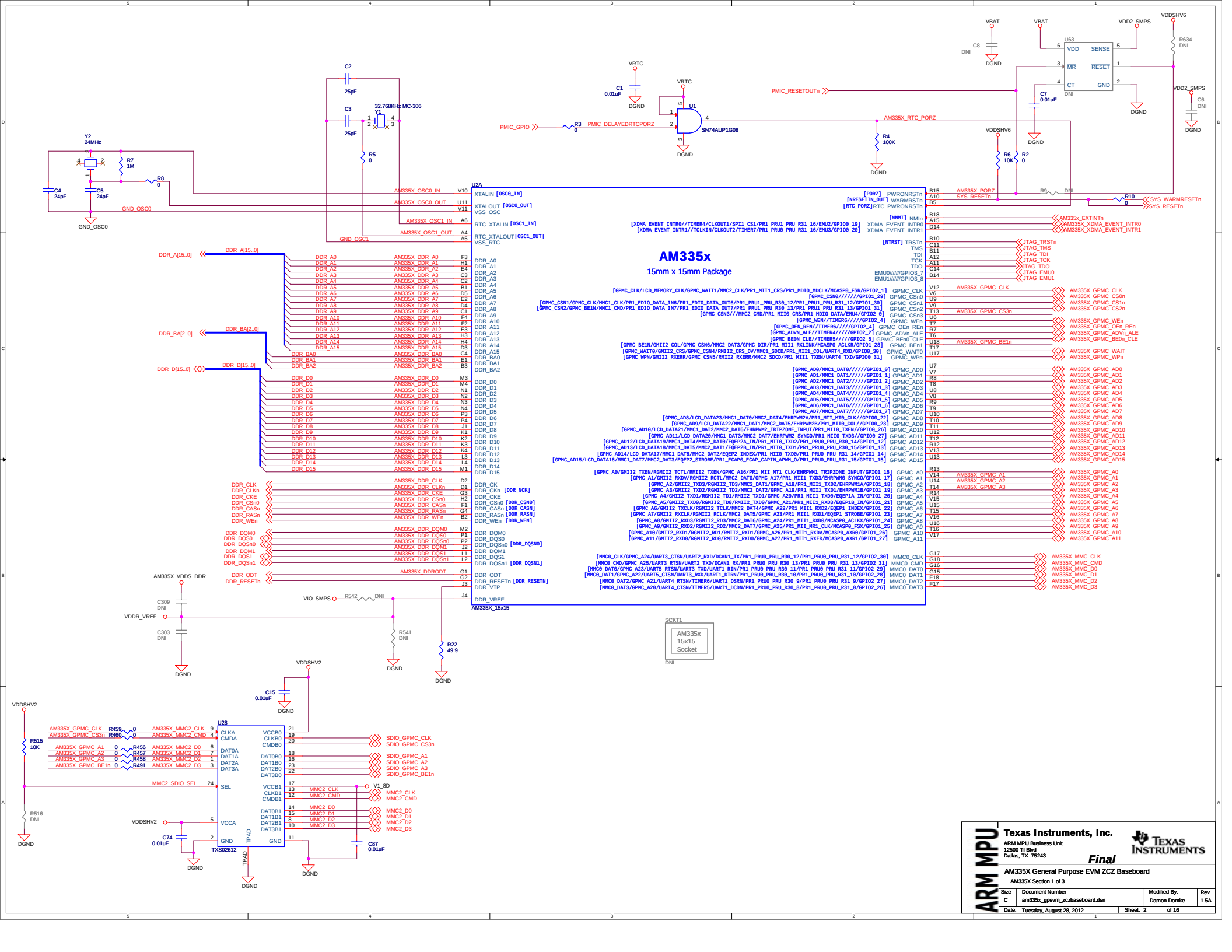
AM335x
15mm x 15mm Package
U2A
AM335X_15x15
U28
TXS02612
U1
SN74AUP1G08
U63
Y1
32.768KHz MC-306
Y2
24MHz
SCKT1
AM335x 15x15 Socket
DNI
Texas Instruments, Inc.
ARM MPU Business Unit
12500 TI Blvd
Dallas, TX 75243
Final
AM335X General Purpose EVM ZCZ Baseboard
AM335X Section 1 of 3
Size C
Document Number am335x_gpevm_zczbaseboard.dsn
Modified By: Damon Domke
Rev 1.5A
Date: Tuesday, August 28, 2012
Sheet: 2 of 16

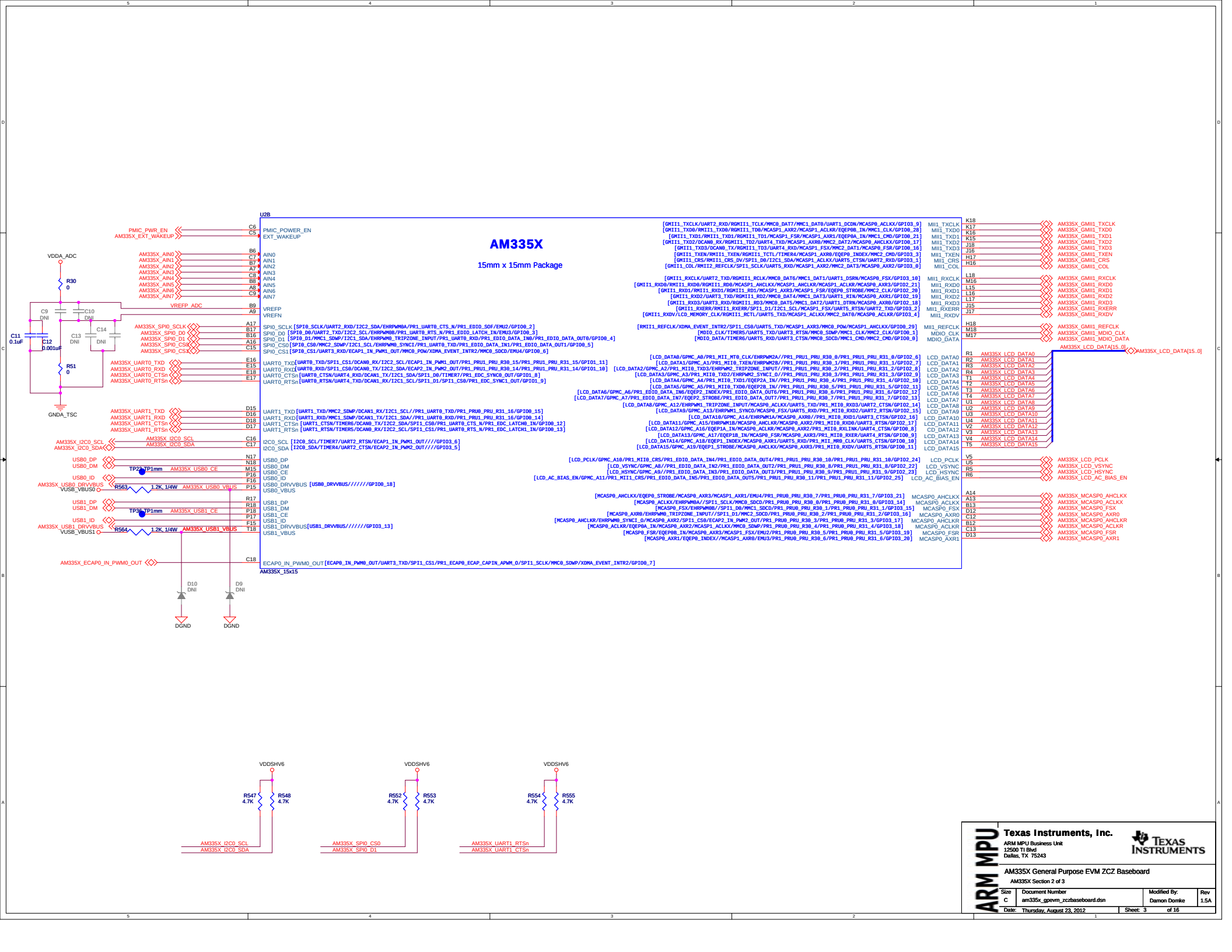
U2B
AM335X
15mm x 15mm Package
AM335X_15x15
PMIC_PWR_EN
AM335X_EXT_WAKEUP
PMIC_POWER_EN
EXT_WAKEUP
VDDA_ADC
R30
0
C9
DNI
C10
DNI
C11
0.1uF
C12
0.001uF
C13
DNI
C14
DNI
R51
0
GNDA_TSC
VREFP_ADC
VREFP
VREFN
AM335X_AIN0
AM335X_AIN1
AM335X_AIN2
AM335X_AIN3
AM335X_AIN4
AM335X_AIN5
AM335X_AIN6
AM335X_AIN7
AIN0
AIN1
AIN2
AIN3
AIN4
AIN5
AIN6
AIN7
AM335X_SPI0_SCLK
AM335X_SPI0_D0
AM335X_SPI0_D1
AM335X_SPI0_CS0
AM335X_SPI0_CS1
SPI0_SCLK [SPI0_SCLK/UART2_RXD/I2C2_SDA/EHRPWM0A/PR1_UART0_CTS_N/PR1_EDIO_SOF/EMU2/GPIO0_2]
SPI0_D0 [SPI0_D0/UART2_TXD/I2C2_SCL/EHRPWM0B/PR1_UART0_RTS_N/PR1_EDIO_LATCH_IN/EMU3/GPIO0_3]
SPI0_D1 [SPI0_D1/MMC1_SDWP/I2C1_SDA/EHRPWM0_TRIPZONE_INPUT/PR1_UART0_RXD/PR1_EDIO_DATA_IN0/PR1_EDIO_DATA_OUT0/GPIO0_4]
SPI0_CS0 [SPI0_CS0/MMC2_SDWP/I2C1_SCL/EHRPWM0_SYNCI/PR1_UART0_TXD/PR1_EDIO_DATA_IN1/PR1_EDIO_DATA_OUT1/GPIO0_5]
SPI0_CS1 [SPI0_CS1/UART3_RXD/ECAP1_IN_PWM1_OUT/MMC0_POW/XDMA_EVENT_INTR2/MMC0_SDCD/EMU4/GPIO0_6]
AM335X_UART0_TXD
AM335X_UART0_RXD
AM335X_UART0_CTSn
AM335X_UART0_RTSn
UART0_TXD [UART0_TXD/SPI1_CS1/DCAN0_RX/I2C2_SCL/ECAP1_IN_PWM1_OUT/PR1_PRU1_PRU_R30_15/PR1_PRU1_PRU_R31_15/GPIO1_11]
UART0_RXD [UART0_RXD/SPI1_CS0/DCAN0_TX/I2C2_SDA/ECAP2_IN_PWM2_OUT/PR1_PRU1_PRU_R30_14/PR1_PRU1_PRU_R31_14/GPIO1_10]
UART0_CTSn [UART0_CTSN/UART4_RXD/DCAN1_TX/I2C1_SDA/SPI1_D0/TIMER7/PR1_EDC_SYNC0_OUT/GPIO1_8]
UART0_RTSn [UART0_RTSN/UART4_TXD/DCAN1_RX/I2C1_SCL/SPI1_D1/SPI1_CS0/PR1_EDC_SYNC1_OUT/GPIO1_9]
AM335X_UART1_TXD
AM335X_UART1_RXD
AM335X_UART1_CTSn
AM335X_UART1_RTSn
UART1_TXD [UART1_TXD/MMC2_SDWP/DCAN1_RX/I2C1_SCL//PR1_UART0_TXD/PR1_PRU0_PRU_R31_16/GPIO0_15]
UART1_RXD [UART1_RXD/MMC1_SDWP/DCAN1_TX/I2C1_SDA//PR1_UART0_RXD/PR1_PRU1_PRU_R31_16/GPIO0_14]
UART1_CTSn [UART1_CTSN/TIMER6/DCAN0_TX/I2C2_SDA/SPI1_CS0/PR1_UART0_CTS_N/PR1_EDC_LATCH0_IN/GPIO0_12]
UART1_RTSn [UART1_RTSN/TIMER5/DCAN0_RX/I2C2_SCL/SPI1_CS1/PR1_UART0_RTS_N/PR1_EDC_LATCH1_IN/GPIO0_13]
AM335X_I2C0_SCL
AM335X_I2C0_SDA
I2C0_SCL [I2C0_SCL/TIMER7/UART2_RTSN/ECAP1_IN_PWM1_OUT////GPIO3_6]
I2C0_SDA [I2C0_SDA/TIMER4/UART2_CTSN/ECAP2_IN_PWM2_OUT////GPIO3_5]
USB0_DP
USB0_DM
USB0_ID
AM335X_USB0_DRVVBUS
VUSB_VBUS0
R563
1.2K, 1/4W
AM335X_USB0_VBUS
TP29 TP1mm
AM335X_USB0_CE
USB0_DP
USB0_DM
USB0_CE
USB0_ID
USB0_DRVVBUS [USB0_DRVVBUS//////GPIO0_18]
USB0_VBUS
USB1_DP
USB1_DM
USB1_ID
AM335X_USB1_DRVVBUS
VUSB_VBUS1
R564
1.2K, 1/4W
AM335X_USB1_VBUS
TP30 TP1mm
AM335X_USB1_CE
USB1_DP
USB1_DM
USB1_CE
USB1_ID
USB1_DRVVBUS [USB1_DRVVBUS//////GPIO3_13]
USB1_VBUS
AM335X_ECAP0_IN_PWM0_OUT
ECAP0_IN_PWM0_OUT [ECAP0_IN_PWM0_OUT/UART3_TXD/SPI1_CS1/PR1_ECAP0_ECAP_CAPIN_APWM_O/SPI1_SCLK/MMC0_SDWP/XDMA_EVENT_INTR2/GPIO0_7]
D10
DNI
D9
DNI
DGND
DGND
VDDSHV6
VDDSHV6
VDDSHV6
R547
4.7K
R548
4.7K
R552
4.7K
R553
4.7K
R554
4.7K
R555
4.7K
AM335X_I2C0_SCL
AM335X_I2C0_SDA
AM335X_SPI0_CS0
AM335X_SPI0_D1
AM335X_UART1_RTSn
AM335X_UART1_CTSn
[GMII1_TXCLK/UART2_RXD/RGMII1_TCLK/MMC0_DAT7/MMC1_DAT0/UART1_DCDN/MCASP0_ACLKX/GPIO3_9]
[GMII1_TXD0/RMII1_TXD0/RGMII1_TD0/MCASP1_AXR2/MCASP1_ACLKR/EQEP0B_IN/MMC1_CLK/GPIO0_28]
[GMII1_TXD1/RMII1_TXD1/RGMII1_TD1/MCASP1_FSR/MCASP1_AXR1/EQEP0A_IN/MMC1_CMD/GPIO0_21]
[GMII1_TXD2/DCAN0_RX/RGMII1_TD2/UART4_TXD/MCASP1_AXR0/MMC2_DAT2/MCASP0_AHCLKX/GPIO0_17]
[GMII1_TXD3/DCAN0_TX/RGMII1_TD3/UART4_RXD/MCASP1_FSX/MMC2_DAT1/MCASP0_FSR/GPIO0_16]
[GMII1_TXEN/RMII1_TXEN/RGMII1_TCTL/TIMER4/MCASP1_AXR0/EQEP0_INDEX/MMC2_CMD/GPIO3_3]
[GMII1_CRS/RMII1_CRS_DV/SPI1_D0/I2C1_SDA/MCASP1_ACLKX/UART5_CTSN/UART2_RXD/GPIO3_1]
[GMII1_COL/RMII2_REFCLK/SPI1_SCLK/UART5_RXD/MCASP1_AXR2/MMC2_DAT3/MCASP0_AXR2/GPIO3_0]
MII1_TXCLK
MII1_TXD0
MII1_TXD1
MII1_TXD2
MII1_TXD3
MII1_TXEN
MII1_CRS
MII1_COL
K18
K17
K16
K15
J18
J16
H17
H16
AM335X_GMII1_TXCLK
AM335X_GMII1_TXD0
AM335X_GMII1_TXD1
AM335X_GMII1_TXD2
AM335X_GMII1_TXD3
AM335X_GMII1_TXEN
AM335X_GMII1_CRS
AM335X_GMII1_COL
[GMII1_RXCLK/UART2_TXD/RGMII1_RCLK/MMC0_DAT6/MMC1_DAT1/UART1_DSRN/MCASP0_FSX/GPIO3_10]
[GMII1_RXD0/RMII1_RXD0/RGMII1_RD0/MCASP1_AHCLKX/MCASP1_AHCLKR/MCASP1_ACLKR/MCASP0_AXR3/GPIO2_21]
[GMII1_RXD1/RMII1_RXD1/RGMII1_RD1/MCASP1_AXR3/MCASP1_FSR/EQEP0_STROBE/MMC2_CLK/GPIO2_20]
[GMII1_RXD2/UART3_TXD/RGMII1_RD2/MMC0_DAT4/MMC1_DAT3/UART1_RIN/MCASP0_AXR1/GPIO2_19]
[GMII1_RXD3/UART3_RXD/RGMII1_RD3/MMC0_DAT5/MMC1_DAT2/UART1_DTRN/MCASP0_AXR0/GPIO2_18]
[GMII1_RXERR/RMII1_RXERR/SPI1_D1/I2C1_SCL/MCASP1_FSX/UART5_RTSN/UART2_TXD/GPIO3_2]
[GMII1_RXDV/LCD_MEMORY_CLK/RGMII1_RCTL/UART5_TXD/MCASP1_ACLKX/MMC2_DAT0/MCASP0_ACLKR/GPIO3_4]
MII1_RXCLK
MII1_RXD0
MII1_RXD1
MII1_RXD2
MII1_RXD3
MII1_RXERR
MII1_RXDV
L18
M16
L15
L16
L17
J15
J17
AM335X_GMII1_RXCLK
AM335X_GMII1_RXD0
AM335X_GMII1_RXD1
AM335X_GMII1_RXD2
AM335X_GMII1_RXD3
AM335X_GMII1_RXERR
AM335X_GMII1_RXDV
[RMII1_REFCLK/XDMA_EVENT_INTR2/SPI1_CS0/UART5_TXD/MCASP1_AXR3/MMC0_POW/MCASP1_AHCLKX/GPIO0_29]
[MDIO_CLK/TIMER5/UART5_TXD/UART3_RTSN/MMC0_SDWP/MMC1_CLK/MMC2_CLK/GPIO0_1]
[MDIO_DATA/TIMER6/UART5_RXD/UART3_CTSN/MMC0_SDCD/MMC1_CMD/MMC2_CMD/GPIO0_0]
MII1_REFCLK
MDIO_CLK
MDIO_DATA
H18
M18
M17
AM335X_GMII1_REFCLK
AM335X_GMII1_MDIO_CLK
AM335X_GMII1_MDIO_DATA
[LCD_DATA0/GPMC_A0/PR1_MII_MT0_CLK/EHRPWM2A//PR1_PRU1_PRU_R30_0/PR1_PRU1_PRU_R31_0/GPIO2_6]
[LCD_DATA1/GPMC_A1/PR1_MII0_TXEN/EHRPWM2B//PR1_PRU1_PRU_R30_1/PR1_PRU1_PRU_R31_1/GPIO2_7]
[LCD_DATA2/GPMC_A2/PR1_MII0_TXD3/EHRPWM2_TRIPZONE_INPUT//PR1_PRU1_PRU_R30_2/PR1_PRU1_PRU_R31_2/GPIO2_8]
[LCD_DATA3/GPMC_A3/PR1_MII0_TXD2/EHRPWM2_SYNCI_O//PR1_PRU1_PRU_R30_3/PR1_PRU1_PRU_R31_3/GPIO2_9]
[LCD_DATA4/GPMC_A4/PR1_MII0_TXD1/EQEP2A_IN//PR1_PRU1_PRU_R30_4/PR1_PRU1_PRU_R31_4/GPIO2_10]
[LCD_DATA5/GPMC_A5/PR1_MII0_TXD0/EQEP2B_IN//PR1_PRU1_PRU_R30_5/PR1_PRU1_PRU_R31_5/GPIO2_11]
[LCD_DATA6/GPMC_A6/PR1_EDIO_DATA_IN6/EQEP2_INDEX/PR1_EDIO_DATA_OUT6/PR1_PRU1_PRU_R30_6/PR1_PRU1_PRU_R31_6/GPIO2_12]
[LCD_DATA7/GPMC_A7/PR1_EDIO_DATA_IN7/EQEP2_STROBE/PR1_EDIO_DATA_OUT7/PR1_PRU1_PRU_R30_7/PR1_PRU1_PRU_R31_7/GPIO2_13]
[LCD_DATA8/GPMC_A12/EHRPWM1_TRIPZONE_INPUT/MCASP0_ACLKX/UART5_TXD/PR1_MII0_RXD3/UART2_CTSN/GPIO2_14]
[LCD_DATA9/GPMC_A13/EHRPWM1_SYNCO/MCASP0_FSX/UART5_RXD/PR1_MII0_RXD2/UART2_RTSN/GPIO2_15]
[LCD_DATA10/GPMC_A14/EHRPWM1A/MCASP0_AXR0//PR1_MII0_RXD1/UART3_CTSN/GPIO2_16]
[LCD_DATA11/GPMC_A15/EHRPWM1B/MCASP0_AHCLKR/MCASP0_AXR2/PR1_MII0_RXD0/UART3_RTSN/GPIO2_17]
[LCD_DATA12/GPMC_A16/EQEP1A_IN/MCASP0_ACLKR/MCASP0_AXR2/PR1_MII0_RXLINK/UART4_CTSN/GPIO0_8]
[LCD_DATA13/GPMC_A17/EQEP1B_IN/MCASP0_FSR/MCASP0_AXR3/PR1_MII0_RXER/UART4_RTSN/GPIO0_9]
[LCD_DATA14/GPMC_A18/EQEP1_INDEX/MCASP0_AXR1/UART5_RXD/PR1_MII_MR0_CLK/UART5_CTSN/GPIO0_10]
[LCD_DATA15/GPMC_A19/EQEP1_STROBE/MCASP0_AHCLKX/MCASP0_AXR3/PR1_MII0_RXDV/UART5_RTSN/GPIO0_11]
LCD_DATA0
LCD_DATA1
LCD_DATA2
LCD_DATA3
LCD_DATA4
LCD_DATA5
LCD_DATA6
LCD_DATA7
LCD_DATA8
LCD_DATA9
LCD_DATA10
LCD_DATA11
CD_DATA12
LCD_DATA13
LCD_DATA14
LCD_DATA15
R1
R2
R3
R4
T1
T2
T3
T4
U1
U2
U3
U4
V2
V3
V4
T5
AM335X_LCD_DATA0
AM335X_LCD_DATA1
AM335X_LCD_DATA2
AM335X_LCD_DATA3
AM335X_LCD_DATA4
AM335X_LCD_DATA5
AM335X_LCD_DATA6
AM335X_LCD_DATA7
AM335X_LCD_DATA8
AM335X_LCD_DATA9
AM335X_LCD_DATA10
AM335X_LCD_DATA11
AM335X_LCD_DATA12
AM335X_LCD_DATA13
AM335X_LCD_DATA14
AM335X_LCD_DATA15
AM335X_LCD_DATA[15..0]
AM335X_LCD_DATA[15..0]
[LCD_PCLK/GPMC_A10/PR1_MII0_CRS/PR1_EDIO_DATA_IN4/PR1_EDIO_DATA_OUT4/PR1_PRU1_PRU_R30_10/PR1_PRU1_PRU_R31_10/GPIO2_24]
[LCD_VSYNC/GPMC_A8//PR1_EDIO_DATA_IN2/PR1_EDIO_DATA_OUT2/PR1_PRU1_PRU_R30_8/PR1_PRU1_PRU_R31_8/GPIO2_22]
[LCD_HSYNC/GPMC_A9//PR1_EDIO_DATA_IN3/PR1_EDIO_DATA_OUT3/PR1_PRU1_PRU_R30_9/PR1_PRU1_PRU_R31_9/GPIO2_23]
[LCD_AC_BIAS_EN/GPMC_A11/PR1_MII1_CRS/PR1_EDIO_DATA_IN5/PR1_EDIO_DATA_OUT5/PR1_PRU1_PRU_R30_11/PR1_PRU1_PRU_R31_11/GPIO2_25]
LCD_PCLK
LCD_VSYNC
LCD_HSYNC
LCD_AC_BIAS_EN
V5
U5
R5
R6
AM335X_LCD_PCLK
AM335X_LCD_VSYNC
AM335X_LCD_HSYNC
AM335X_LCD_AC_BIAS_EN
[MCASP0_AHCLKX/EQEP0_STROBE/MCASP0_AXR3/MCASP1_AXR1/EMU4/PR1_PRU0_PRU_R30_7/PR1_PRU0_PRU_R31_7/GPIO3_21]
[MCASP0_ACLKX/EHRPWM0A//SPI1_SCLK/MMC0_SDCD/PR1_PRU0_PRU_R30_0/PR1_PRU0_PRU_R31_0/GPIO3_14]
[MCASP0_FSX/EHRPWM0B//SPI1_D0/MMC1_SDCD/PR1_PRU0_PRU_R30_1/PR1_PRU0_PRU_R31_1/GPIO3_15]
[MCASP0_AXR0/EHRPWM0_TRIPZONE_INPUT//SPI1_D1/MMC2_SDCD/PR1_PRU0_PRU_R30_2/PR1_PRU0_PRU_R31_2/GPIO3_16]
[MCASP0_AHCLKR/EHRPWM0_SYNCI_O/MCASP0_AXR2/SPI1_CS0/ECAP2_IN_PWM2_OUT/PR1_PRU0_PRU_R30_3/PR1_PRU0_PRU_R31_3/GPIO3_17]
[MCASP0_ACLKR/EQEP0A_IN/MCASP0_AXR2/MCASP1_ACLKX/MMC0_SDWP/PR1_PRU0_PRU_R30_4/PR1_PRU0_PRU_R31_4/GPIO3_18]
[MCASP0_FSR/EQEP0B_IN/MCASP0_AXR3/MCASP1_FSX/EMU2/PR1_PRU0_PRU_R30_5/PR1_PRU0_PRU_R31_5/GPIO3_19]
[MCASP0_AXR1/EQEP0_INDEX//MCASP1_AXR0/EMU3/PR1_PRU0_PRU_R30_6/PR1_PRU0_PRU_R31_6/GPIO3_20]
MCASP0_AHCLKX
MCASP0_ACLKX
MCASP0_FSX
MCASP0_AXR0
MCASP0_AHCLKR
MCASP0_ACLKR
MCASP0_FSR
MCASP0_AXR1
A14
A13
B13
D12
C12
B12
C13
D13
AM335X_MCASP0_AHCLKX
AM335X_MCASP0_ACLKX
AM335X_MCASP0_FSX
AM335X_MCASP0_AXR0
AM335X_MCASP0_AHCLKR
AM335X_MCASP0_ACLKR
AM335X_MCASP0_FSR
AM335X_MCASP0_AXR1
ARM MPU
Texas Instruments, Inc.
ARM MPU Business Unit
12500 TI Blvd
Dallas, TX 75243
AM335X General Purpose EVM ZCZ Baseboard
AM335X Section 2 of 3
Size C
Document Number am335x_gpevm_zczbaseboard.dsn
Modified By: Damon Domke
Rev 1.5A
Date: Thursday, August 23, 2012
Sheet: 3 of 16

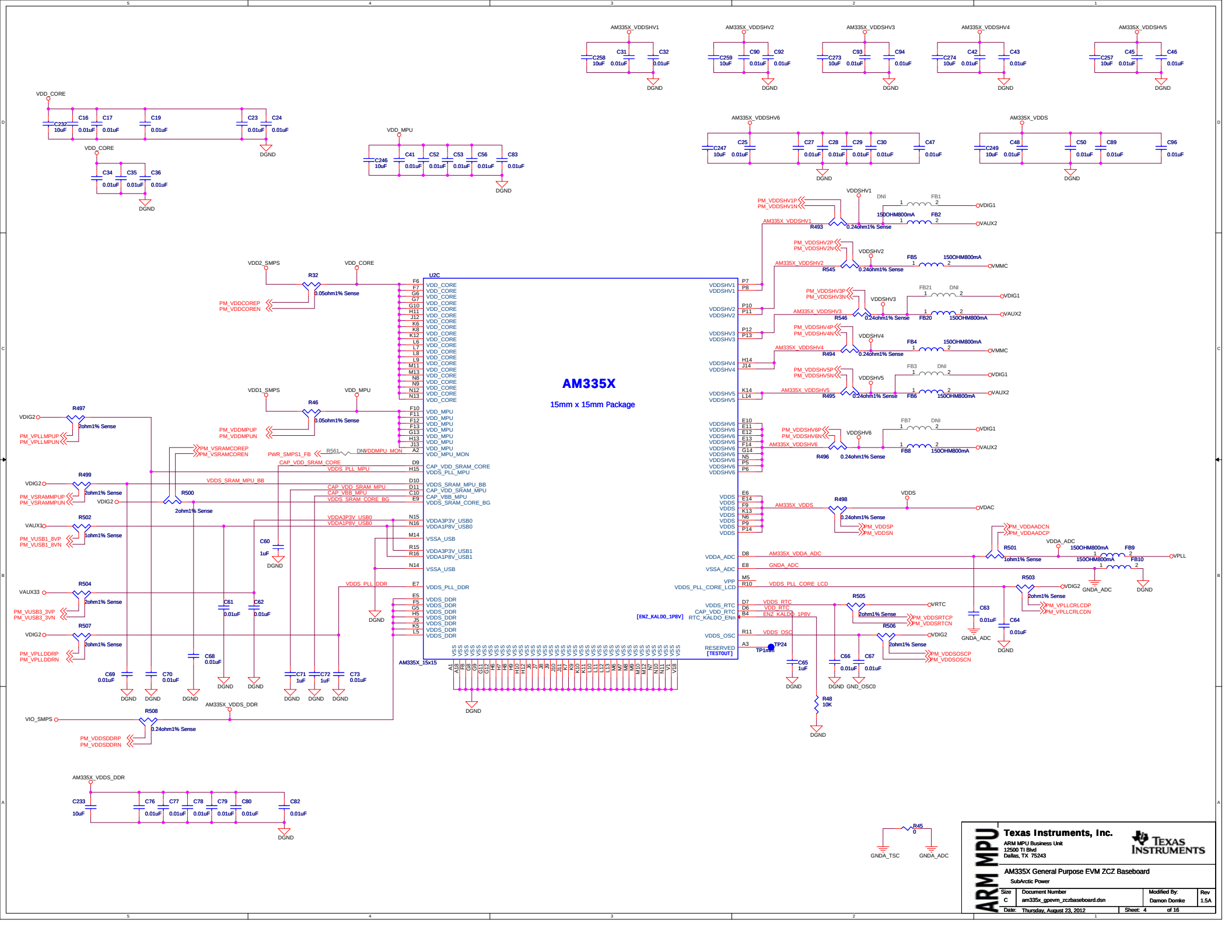
AM335X
15mm x 15mm Package
U2C
AM335X_15x15
AM335X_VDDSHV1
AM335X_VDDSHV2
AM335X_VDDSHV3
AM335X_VDDSHV4
AM335X_VDDSHV5
AM335X_VDDSHV6
AM335X_VDDS
VDD_CORE
VDD_MPU
AM335X_VDDS_DDR
VDD2_SMPS
VDD1_SMPS
VDDSHV1
VDDSHV2
VDDSHV3
VDDSHV4
VDDSHV5
VDDSHV6
VDDS
VDDA_ADC
VSSA_ADC
VPP
VDDS_PLL_CORE_LCD
VDDS_RTC
CAP_VDD_RTC
RTC_KALDO_ENn
VDDS_OSC
RESERVED
[TESTOUT]
[ENZ_KALDO_1P8V]
VDD_CORE
VDD_MPU_MON
CAP_VDD_SRAM_CORE
VDDS_PLL_MPU
CAP_VDD_SRAM_MPU
CAP_VBB_MPU
VDDS_SRAM_CORE_BG
VDDS_SRAM_MPU_BB
VDDA3P3V_USB0
VDDA1P8V_USB0
VSSA_USB
VDDA3P3V_USB1
VDDA1P8V_USB1
VDDS_PLL_DDR
VDDS_DDR
VSS
PM_VDDCOREP
PM_VDDCOREN
PM_VDDMPUP
PM_VDDMPUN
PM_VSRAMCOREP
PM_VSRAMCOREN
PM_VSRAMMPUP
PM_VSRAMMPUN
PM_VPLLMPUP
PM_VPLLMPUN
PM_VUSB1_8VP
PM_VUSB1_8VN
PM_VUSB3_3VP
PM_VUSB3_3VN
PM_VPLLDDRP
PM_VPLLDDRN
PM_VDDSDDRP
PM_VDDSDDRN
PM_VDDSHV1P
PM_VDDSHV1N
PM_VDDSHV2P
PM_VDDSHV2N
PM_VDDSHV3P
PM_VDDSHV3N
PM_VDDSHV4P
PM_VDDSHV4N
PM_VDDSHV5P
PM_VDDSHV5N
PM_VDDSHV6P
PM_VDDSHV6N
PM_VDDSP
PM_VDDSN
PM_VDDAADCN
PM_VDDAADCP
PM_VDDSRTCP
PM_VDDSRTCN
PM_VDDSOSCP
PM_VDDSOSCN
PM_VPLLCRLCDP
PM_VPLLCRLCDN
PWR_SMPS1_FB
DNI/VDDMPU_MON
AM335X_VDDS_DDR
AM335X_VDDSHV1
AM335X_VDDSHV2
AM335X_VDDSHV3
AM335X_VDDSHV4
AM335X_VDDSHV5
AM335X_VDDSHV6
AM335X_VDDS
AM335X_VDDA_ADC
GNDA_ADC
VIO_SMPS
VDIG1
VDIG2
VAUX1
VAUX2
VAUX33
VMMC
VDAC
VPLL
VRTC
GNDA_ADC
GNDA_TSC
GND_OSC0
DGND
R32
R46
R493
R545
R546
R494
R495
R496
R497
R498
R499
R500
R501
R502
R503
R504
R505
R506
R507
R508
R48
R45
C60
C61
C62
C63
C64
C65
C66
C67
C68
C69
C70
C71
C72
C73
TP24
FB1
FB2
FB4
FB5
FB6
FB8
FB9
FB10
FB20
FB21
150OHM800mA
0.05ohm1% Sense
0.24ohm1% Sense
2ohm1% Sense
1ohm1% Sense
Texas Instruments, Inc.
ARM MPU Business Unit
12500 TI Blvd
Dallas, TX 75243
ARM MPU
AM335X General Purpose EVM ZCZ Baseboard
SubArctic Power
Size C
Document Number am335x_gpevm_zczbaseboard.dsn
Modified By: Damon Domke
Rev 1.5A
Date: Thursday, August 23, 2012
Sheet: 4 of 16

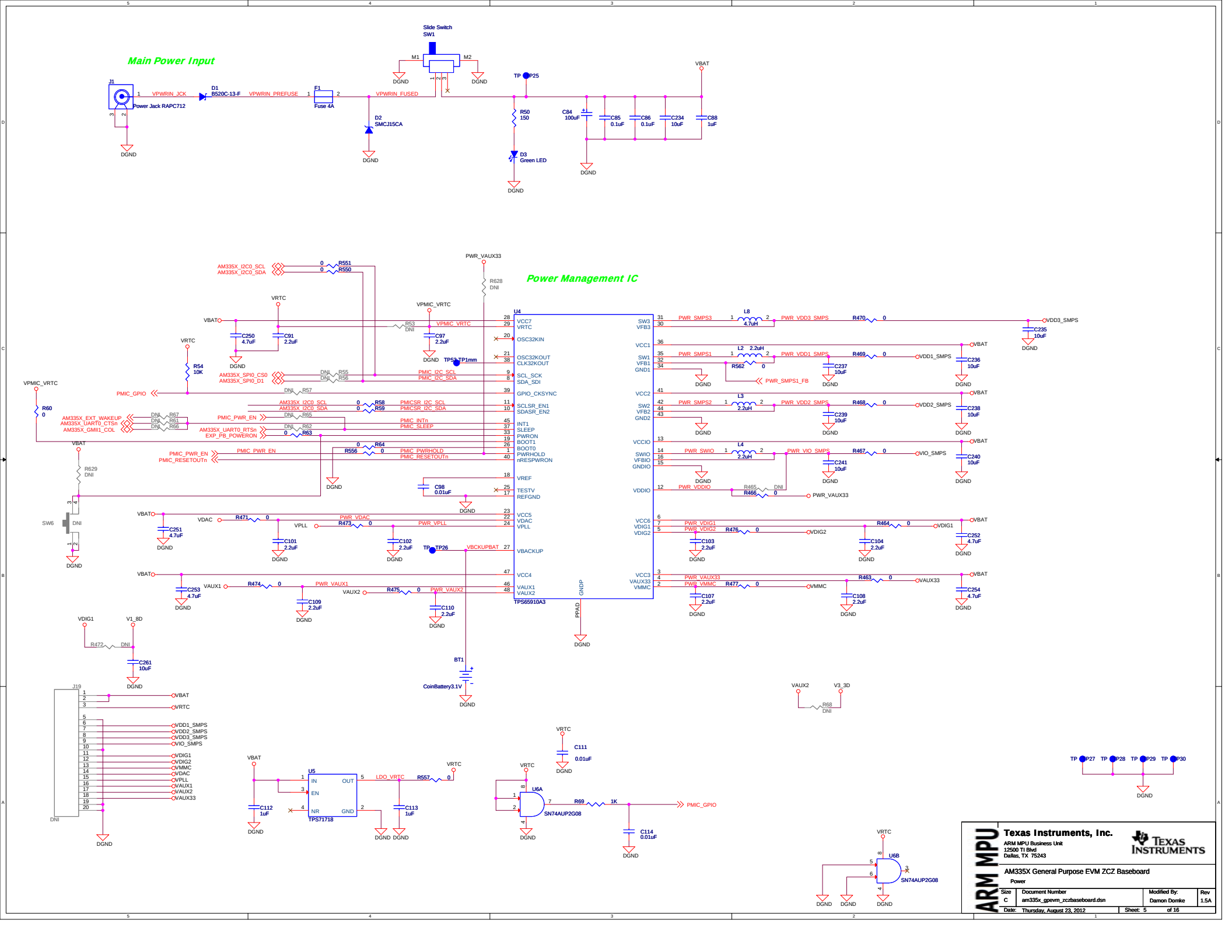
Main Power Input
Slide Switch
SW1
J1
Power Jack RAPC712
D1
B520C-13-F
F1
Fuse 4A
D2
SMCJ15CA
TP P25
R50
150
D3
Green LED
VBAT
C84 100uF
C85 0.1uF
C86 0.1uF
C234 10uF
C88 1uF
DGND
VPWRIN_JCK
VPWRIN_PREFUSE
VPWRIN_FUSED
Power Management IC
U4
TPS65910A3
PWR_VAUX33
VRTC
VPMIC_VRTC
VBAT
PMIC_GPIO
PMIC_I2C_SCL
PMIC_I2C_SDA
PMIC_PWR_EN
PMIC_INTn
PMIC_SLEEP
PMIC_PWRHOLD
PMIC_RESETOUTn
PWR_SMPS1
PWR_SMPS2
PWR_SMPS3
PWR_SWIO
PWR_VDDIO
PWR_VDIG1
PWR_VDIG2
PWR_VPLL
PWR_VDAC
PWR_VAUX1
PWR_VAUX2
PWR_VAUX33
PWR_VMMC
VDD1_SMPS
VDD2_SMPS
VDD3_SMPS
VIO_SMPS
VDIG1
VDIG2
VMMC
VDAC
VPLL
VAUX1
VAUX2
VAUX33
VBACKUPBAT
CoinBattery3.1V
BT1
J19
SW6
U5
TPS71718
LDO_VRTC
U6A
U6B
SN74AUP2G08
TP P27
TP P28
TP P29
TP P30
ARM MPU
Texas Instruments, Inc.
ARM MPU Business Unit
12500 TI Blvd
Dallas, TX 75243
AM335X General Purpose EVM ZCZ Baseboard
Power
Size C
Document Number am335x_gpevm_zczbaseboard.dsn
Modified By: Damon Domke
Rev 1.5A
Date: Thursday, August 23, 2012
Sheet: 5 of 16

ID Memory

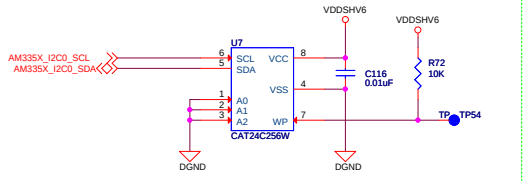

JTAG Connector

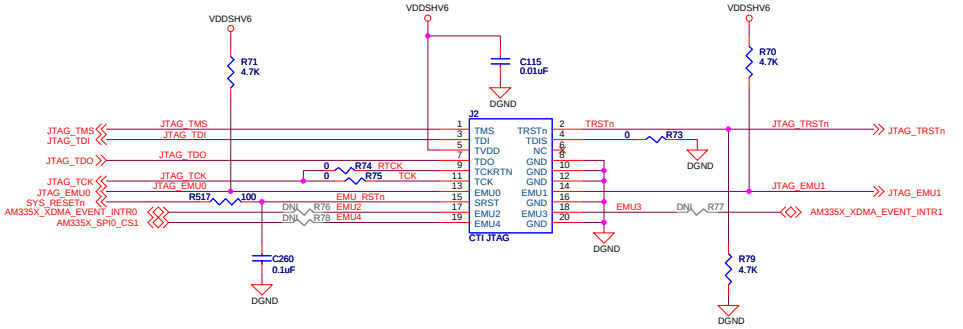

User LED's

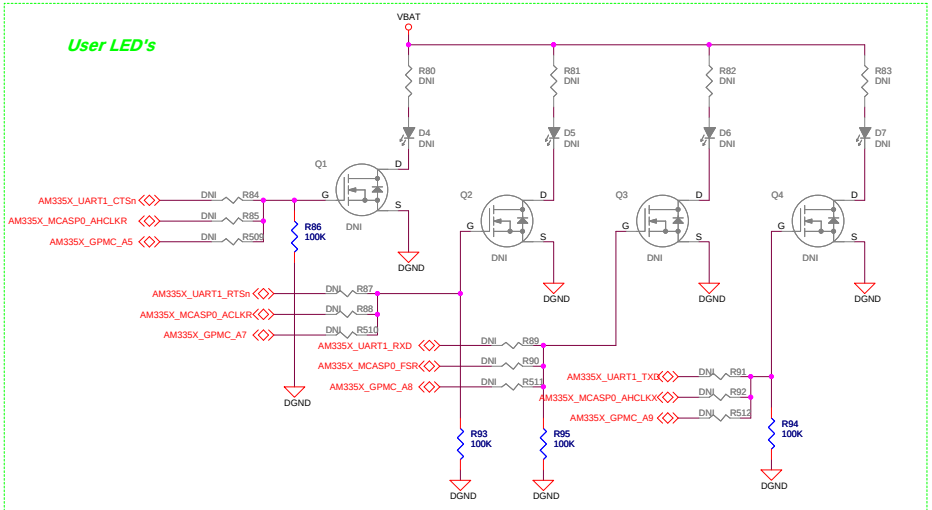

Clockout Measurement Testpoints

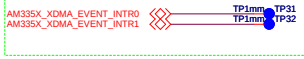

ADC Test

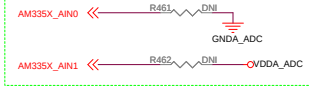

User Reset / Interrupt Switches

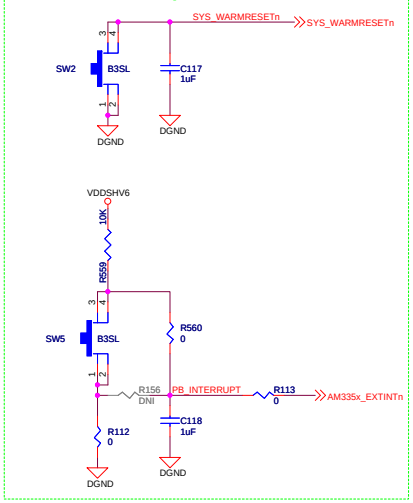

Boot Configuration

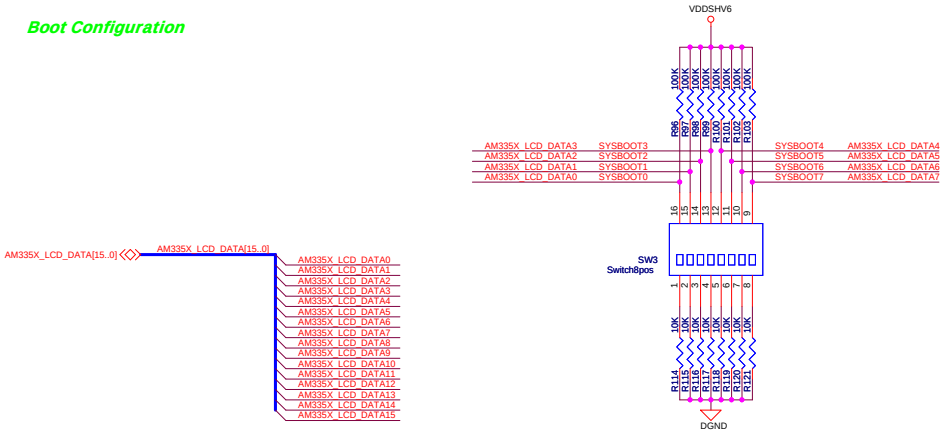

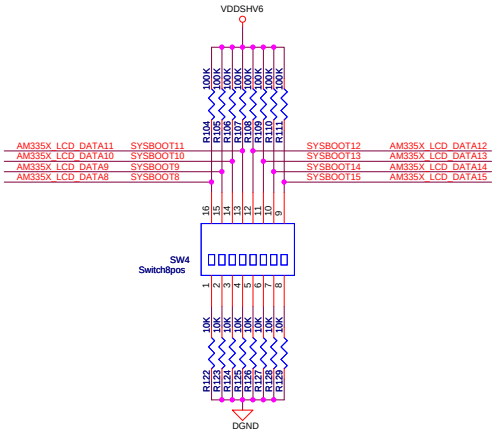

ARM MPU	**Texas Instruments, Inc.** ARM MPU Business Unit 12500 TI Blvd Dallas, TX 75243		
	AM335X General Purpose EVM ZCZ Baseboard Debug/Configuration		
Size: C	Document Number: am335x_gpevm_zczbaseboard.dsn	Modified By: Damon Domke	Rev: 1.5A
Date: Monday, August 27, 2012		Sheet: 6 of 16	

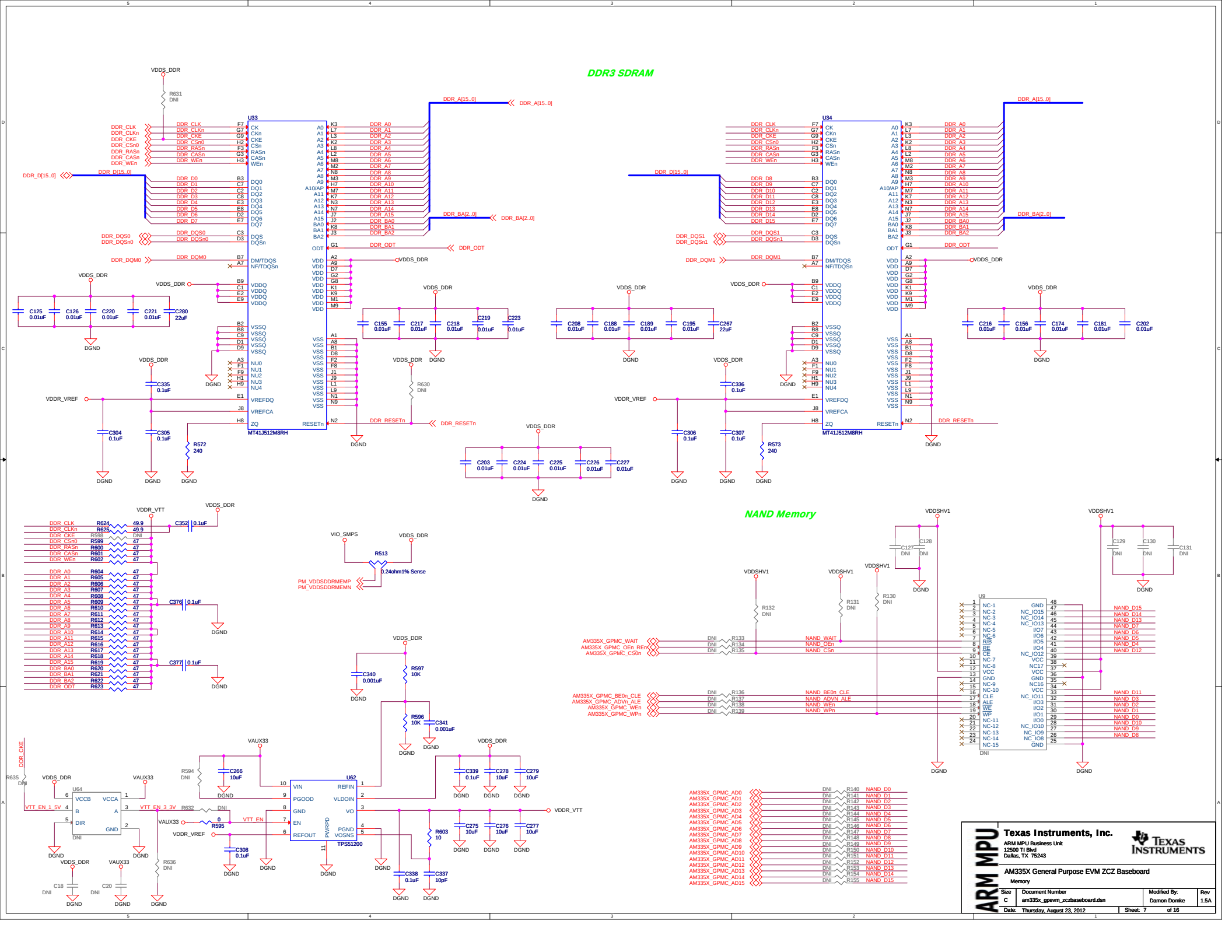
DDR3 SDRAM
NAND Memory
U33
U34
MT41J512M8RH
U62
TPS51200
U64
U9
VDDS_DDR
VDDR_VREF
VDDR_VTT
VAUX33
VIO_SMPS
VDDSHV1
DGND
R631 DNI
R630 DNI
R572 240
R573 240
R513 0.24ohm1% Sense
PM_VDDSDDRMEMP
PM_VDDSDDRMEMN
R597 10K
R596 10K
R603 10
R595 0
R632 DNI
R594 DNI
R635 DNI
R636 DNI
C125 0.01uF
C126 0.01uF
C220 0.01uF
C221 0.01uF
C280 22uF
C155 0.01uF
C217 0.01uF
C218 0.01uF
C219 0.01uF
C223 0.01uF
C208 0.01uF
C188 0.01uF
C189 0.01uF
C195 0.01uF
C267 22uF
C216 0.01uF
C156 0.01uF
C174 0.01uF
C181 0.01uF
C202 0.01uF
C335 0.1uF
C304 0.1uF
C305 0.1uF
C336 0.1uF
C306 0.1uF
C307 0.1uF
C203 0.01uF
C224 0.01uF
C225 0.01uF
C226 0.01uF
C227 0.01uF
C340 0.001uF
C341 0.001uF
C266 10uF
C339 0.1uF
C278 10uF
C279 10uF
C275 10uF
C276 10uF
C277 10uF
C308 0.1uF
C338 0.1uF
C337 10pF
C352 0.1uF
C376 0.1uF
C377 0.1uF
C127 DNI
C128 DNI
C129 DNI
C130 DNI
C131 DNI
R132 DNI
R131 DNI
R130 DNI
R624 49.9
R625 49.9
R598 DNI
R599 47
R600 47
R601 47
R602 47
R604 47
R605 47
R606 47
R607 47
R608 47
R609 47
R610 47
R611 47
R612 47
R613 47
R614 47
R615 47
R616 47
R617 47
R618 47
R619 47
R620 47
R621 47
R622 47
R623 47
R633 DNI
R634 DNI
R135 DNI
R136 DNI
R137 DNI
R138 DNI
R139 DNI
R140 DNI
R141 DNI
R142 DNI
R143 DNI
R144 DNI
R145 DNI
R146 DNI
R147 DNI
R148 DNI
R149 DNI
R150 DNI
R151 DNI
R152 DNI
R153 DNI
R154 DNI
R155 DNI
DDR_CLK
DDR_CLKn
DDR_CKE
DDR_CSn0
DDR_RASn
DDR_CASn
DDR_WEn
DDR_D[15..0]
DDR_DQS0
DDR_DQSn0
DDR_DQM0
DDR_A[15..0]
DDR_BA[2..0]
DDR_ODT
DDR_RESETn
DDR_DQS1
DDR_DQSn1
DDR_DQM1
VTT_EN_1_5V
VTT_EN_3_3V
VTT_EN
AM335X_GPMC_WAIT
AM335X_GPMC_OEn_REn
AM335X_GPMC_CS0n
AM335X_GPMC_BE0n_CLE
AM335X_GPMC_ADVn_ALE
AM335X_GPMC_WEn
AM335X_GPMC_WPn
AM335X_GPMC_AD0
AM335X_GPMC_AD1
AM335X_GPMC_AD2
AM335X_GPMC_AD3
AM335X_GPMC_AD4
AM335X_GPMC_AD5
AM335X_GPMC_AD6
AM335X_GPMC_AD7
AM335X_GPMC_AD8
AM335X_GPMC_AD9
AM335X_GPMC_AD10
AM335X_GPMC_AD11
AM335X_GPMC_AD12
AM335X_GPMC_AD13
AM335X_GPMC_AD14
AM335X_GPMC_AD15
NAND_WAIT
NAND_OEn
NAND_CSn
NAND_BE0n_CLE
NAND_ADVN_ALE
NAND_WEn
NAND_WPn
NAND_D0
NAND_D1
NAND_D2
NAND_D3
NAND_D4
NAND_D5
NAND_D6
NAND_D7
NAND_D8
NAND_D9
NAND_D10
NAND_D11
NAND_D12
NAND_D13
NAND_D14
NAND_D15
Texas Instruments, Inc.
ARM MPU Business Unit
12500 TI Blvd
Dallas, TX 75243
AM335X General Purpose EVM ZCZ Baseboard
Memory
ARM MPU
Size C
Document Number am335x_gpevm_zczbaseboard.dsn
Modified By: Damon Domke
Rev 1.5A
Date: Thursday, August 23, 2012
Sheet: 7 of 16

Expansion Connector - EXP0

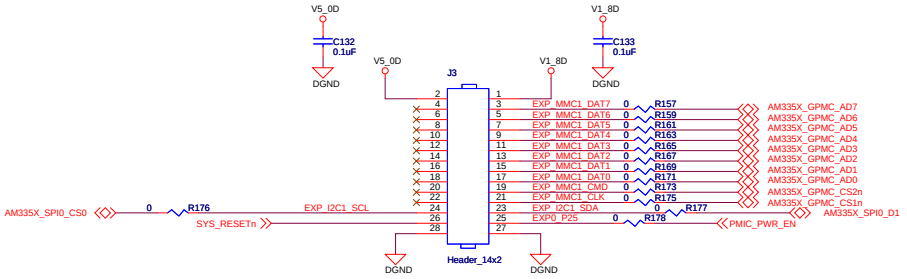

Expansion Connector - EXP1

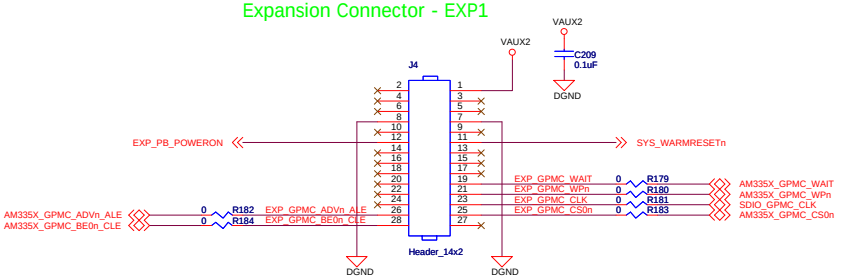

Expansion Connector - EXP2

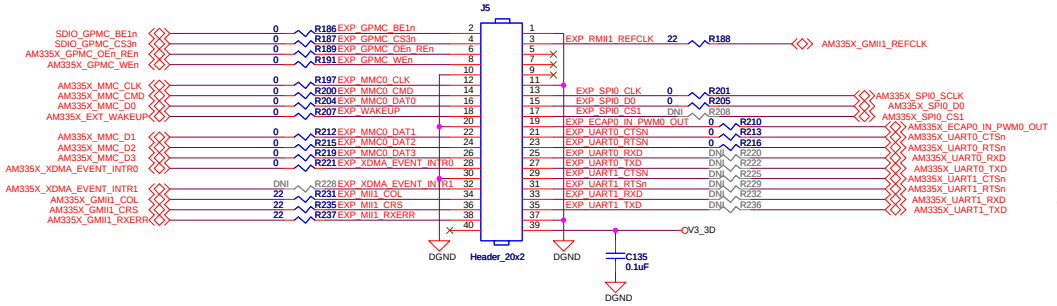

Expansion Connector - EXP3

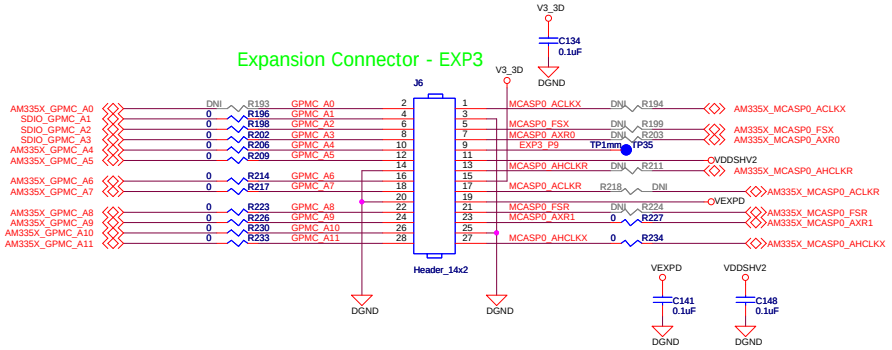

ARM MPU

Texas Instruments, Inc.

ARM MPU Business Unit
12500 TI Blvd
Dallas, TX 75243

TEXAS INSTRUMENTS

AM335X General Purpose EVM ZCZ Baseboard

Expansion Connectors

Size	Document Number	Modified By:	Rev
C	am335x_gpevm_zczbaseboard.dsn	Damon Domke	1.5A
Date: Thursday, August 23, 2012		Sheet: 8 of 16	

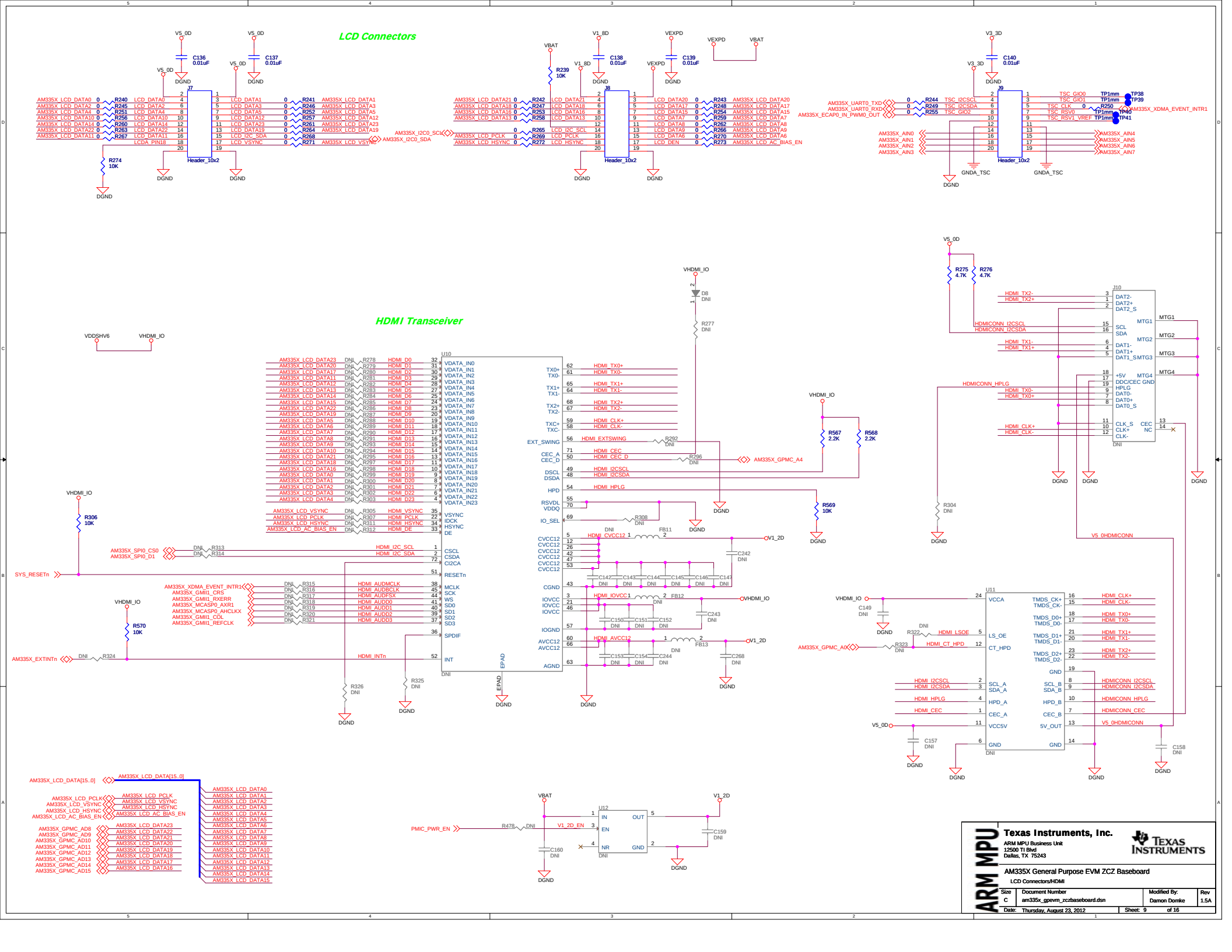
LCD Connectors
HDMI Transceiver
J7
J8
J9
J10
U10
U11
U12
Header_10x2
Texas Instruments, Inc.
ARM MPU Business Unit
12500 TI Blvd
Dallas, TX 75243
ARM MPU
AM335X General Purpose EVM ZCZ Baseboard
LCD Connectors/HDMI
Size C
Document Number am335x_gpevm_zczbaseboard.dsn
Modified By: Damon Domke
Rev 1.5A
Date: Thursday, August 23, 2012
Sheet: 9 of 16

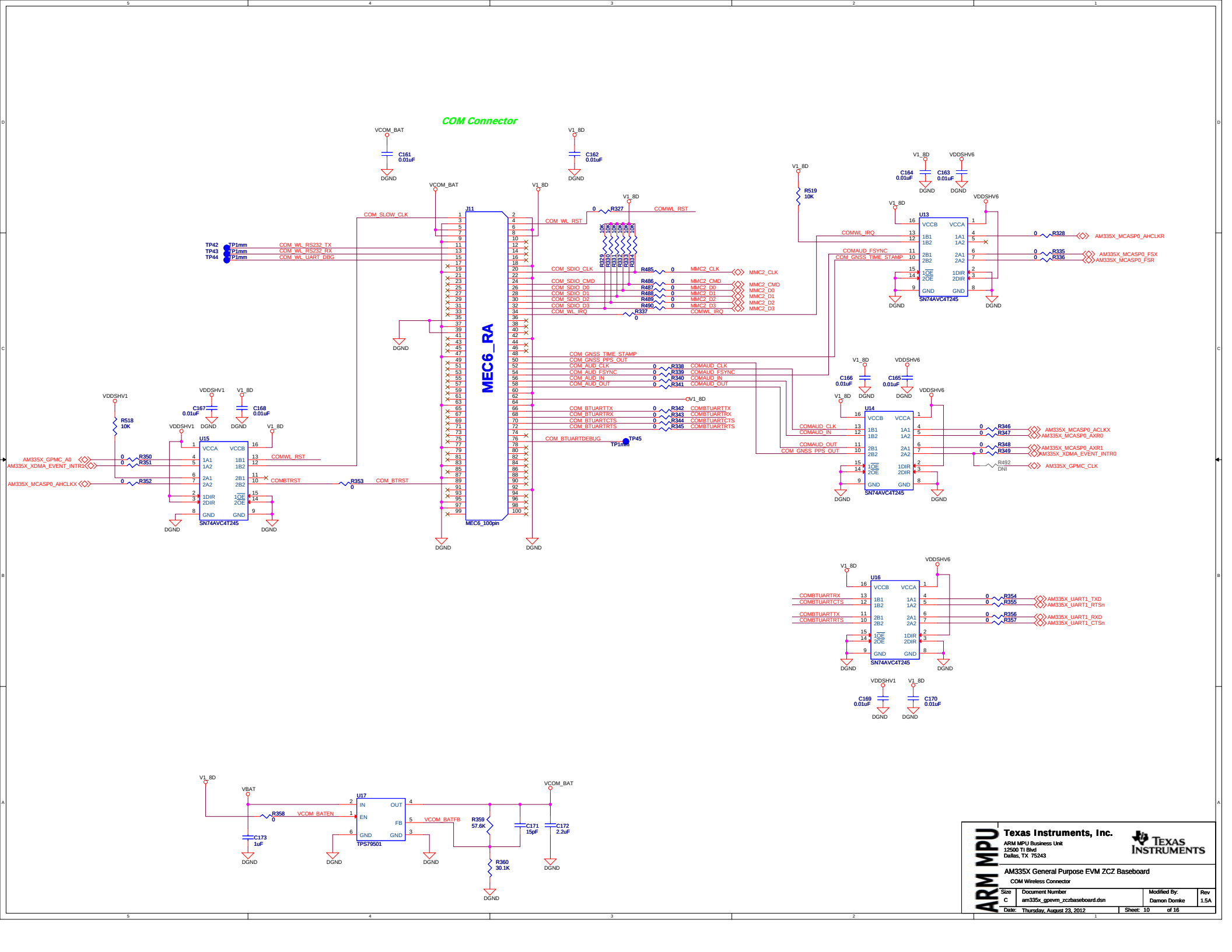
COM Connector
MEC6_RA
MEC6_100pin
J11
U13
U14
U15
U16
U17
SN74AVC4T245
TPS79501
VCOM_BAT
V1_8D
VDDSHV1
VDDSHV6
VBAT
DGND
COM_SLOW_CLK
COM_WL_RST
COMWL_RST
COM_WL_RS232_TX
COM_WL_RS232_RX
COM_WL_UART_DBG
COM_SDIO_CLK
COM_SDIO_CMD
COM_SDIO_D0
COM_SDIO_D1
COM_SDIO_D2
COM_SDIO_D3
COM_WL_IRQ
COMWL_IRQ
COM_GNSS_TIME_STAMP
COM_GNSS_PPS_OUT
COM_AUD_CLK
COM_AUD_FSYNC
COM_AUD_IN
COM_AUD_OUT
COMAUD_CLK
COMAUD_FSYNC
COMAUD_IN
COMAUD_OUT
COM_BTUARTTX
COM_BTUARTRX
COM_BTUARTCTS
COM_BTUARTRTS
COM_BTUARTDEBUG
COMBTUARTTX
COMBTUARTRX
COMBTUARTCTS
COMBTUARTRTS
COMBTRST
COM_BTRST
COM_BATEN
COM_BATFB
MMC2_CLK
MMC2_CMD
MMC2_D0
MMC2_D1
MMC2_D2
MMC2_D3
AM335X_GPMC_A0
AM335X_XDMA_EVENT_INTR1
AM335X_MCASP0_AHCLKX
AM335X_MCASP0_AHCLKR
AM335X_MCASP0_FSX
AM335X_MCASP0_FSR
AM335X_MCASP0_ACLKX
AM335X_MCASP0_AXR0
AM335X_MCASP0_AXR1
AM335X_XDMA_EVENT_INTR0
AM335X_GPMC_CLK
AM335X_UART1_TXD
AM335X_UART1_RTSn
AM335X_UART1_RXD
AM335X_UART1_CTSn
TP1mm
TP45
DNI
ARM MPU
Texas Instruments, Inc.
ARM MPU Business Unit
12500 TI Blvd
Dallas, TX 75243
AM335X General Purpose EVM ZCZ Baseboard
COM Wireless Connector
Size C
Document Number am335x_gpevm_zczbaseboard.dsn
Modified By: Damon Domke
Rev 1.5A
Date: Thursday, August 23, 2012
Sheet: 10 of 16

RS-232

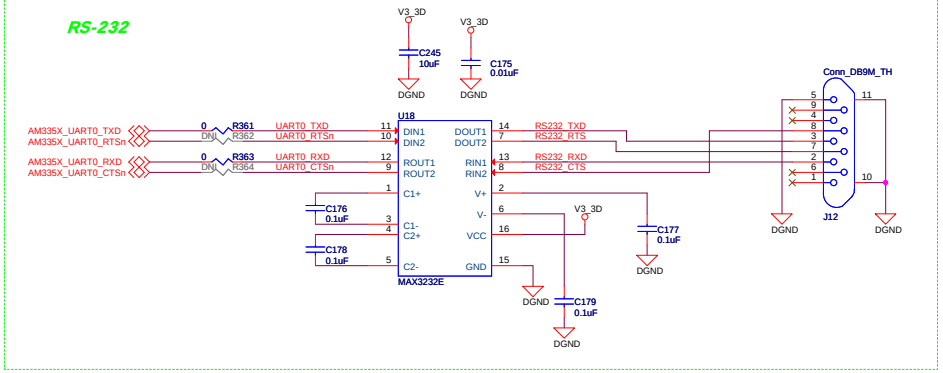

SD/MMC Connector

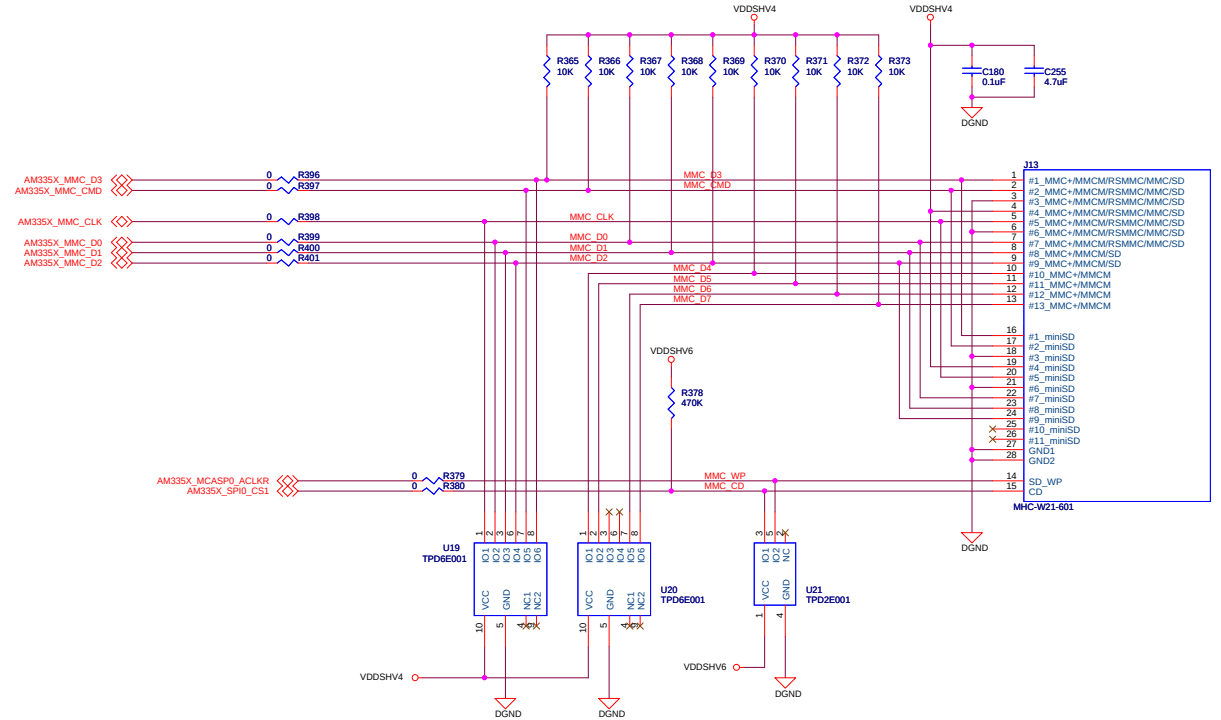

Texas Instruments, Inc.
ARM MPU Business Unit
12500 TI Blvd
Dallas, TX 75243

ARM MPU

AM335X General Purpose EVM ZCZ Baseboard

Serial & SDMMC Interfaces

Size	Document Number	Modified By:	Rev
C	am335x_gpevm_zczbaseboard.dsn	Damon Domke	1.5A
Date: Thursday, August 23, 2012		Sheet: 11 of 16	

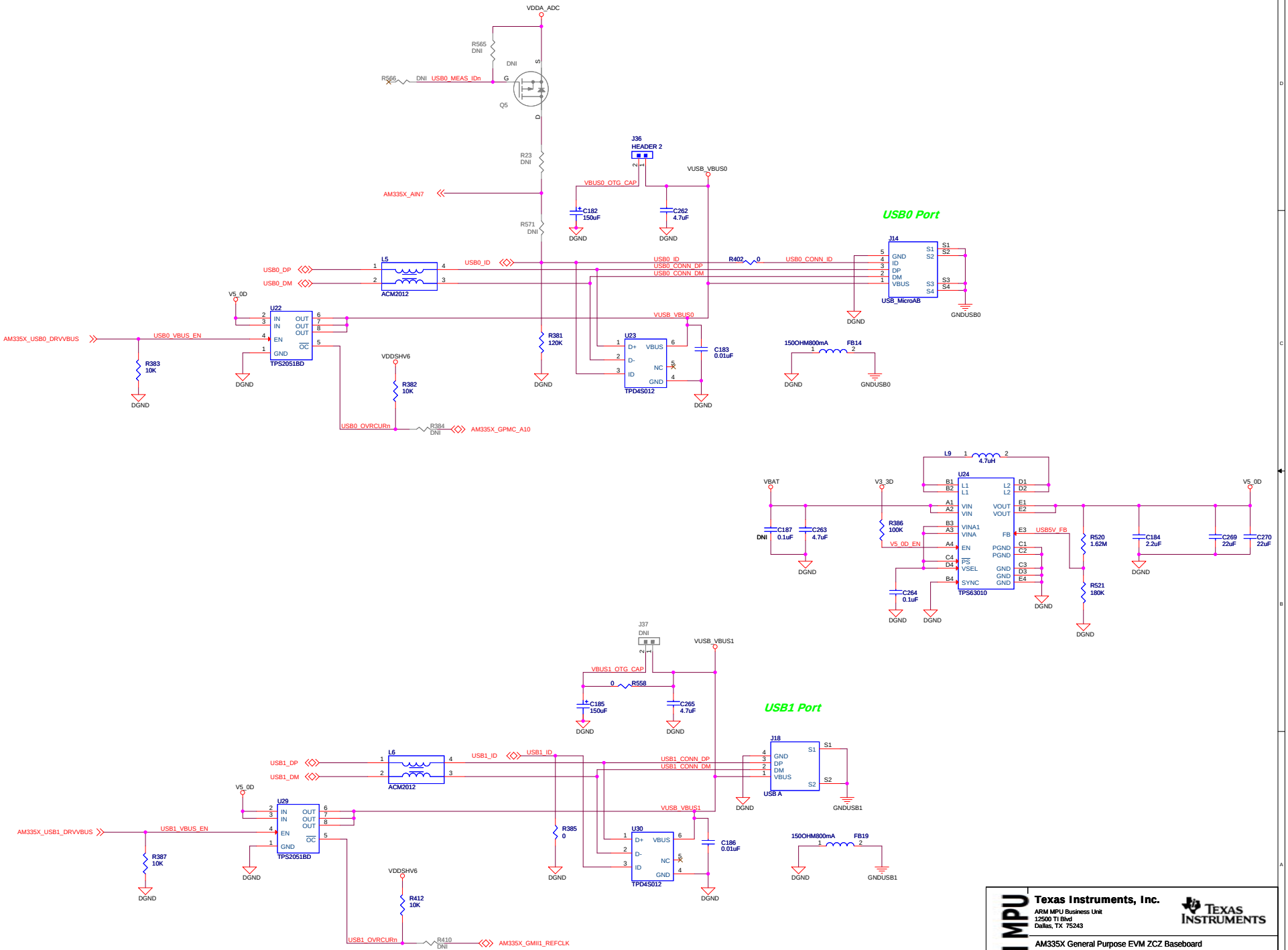

ARM MPU

Texas Instruments, Inc.
ARM MPU Business Unit
12500 TI Blvd
Dallas, TX 75243

TEXAS INSTRUMENTS

AM335X General Purpose EVM ZCZ Baseboard
USB

Size	Document Number	Modified By:	Rev
C	am335x_gpevm_zczbaseboard.dsn	Damon Domke	1.5A
Date: Tuesday, August 21, 2012		Sheet: 12 of 16	

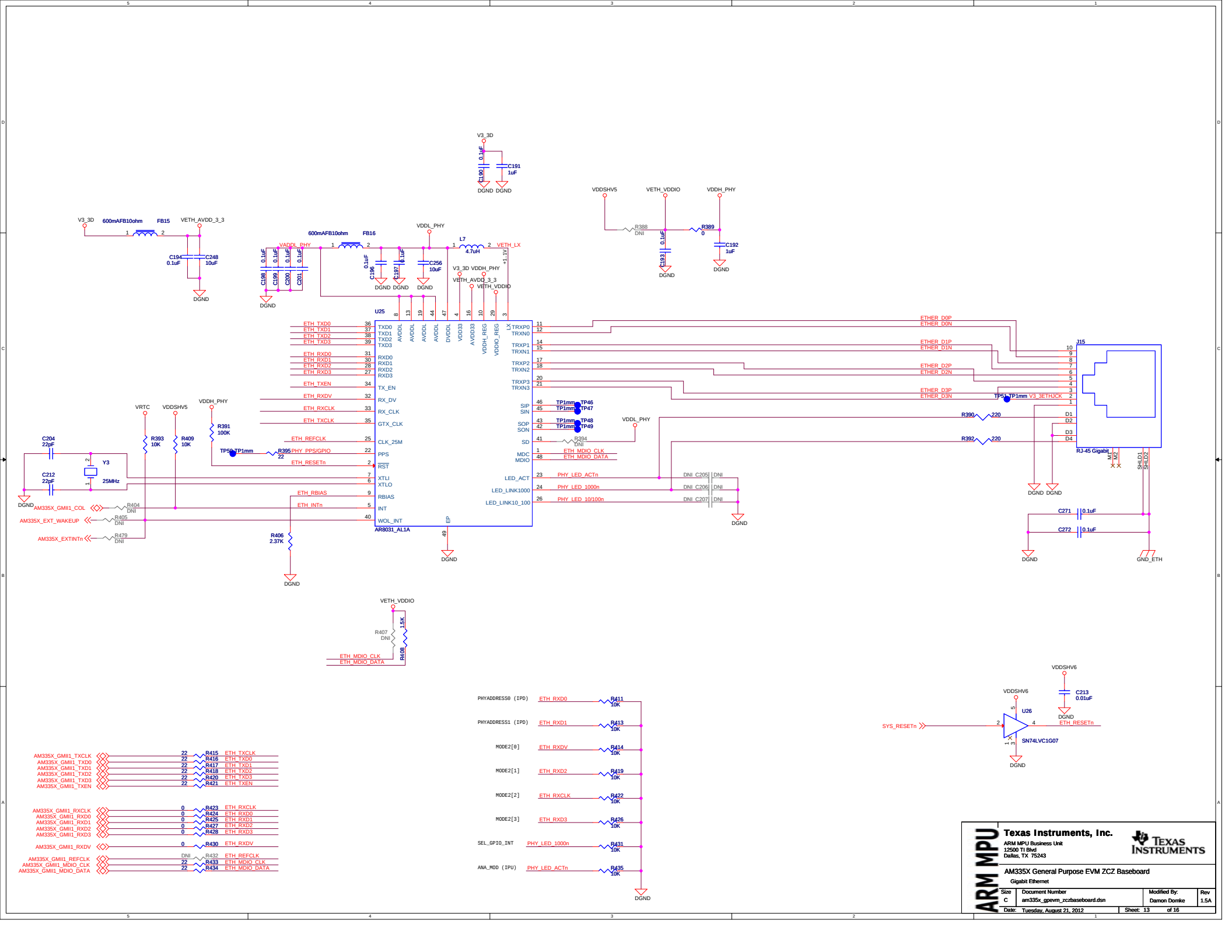
V3_3D
600mAFB10ohm
FB15
VETH_AVDD_3_3
C194 0.1uF
C248 10uF
DGND
VDDL_PHY
600mAFB10ohm
FB16
VADDL_PHY
C198 0.1uF
C199 0.1uF
C200 0.1uF
C201 0.1uF
C196 0.1uF
C197 0.1uF
C256 10uF
L7 4.7uH
VETH_LX
+1.1V
C190 0.1uF
C191 1uF
VDDSHV5
VETH_VDDIO
VDDH_PHY
R388 DNI
R389 0
C193 0.1uF
C192 1uF
V3_3D VDDH_PHY
VETH_AVDD_3_3
VETH_VDDIO
U25
AR8031_AL1A
ETH_TXD0
ETH_TXD1
ETH_TXD2
ETH_TXD3
ETH_RXD0
ETH_RXD1
ETH_RXD2
ETH_RXD3
ETH_TXEN
ETH_RXDV
ETH_RXCLK
ETH_TXCLK
ETH_REFCLK
PHY_PPS/GPIO
ETH_RESETn
ETH_RBIAS
ETH_INTn
AM335X_EXT_WAKEUP
AM335X_EXTINTn
AM335X_GMII1_COL
TXD0
TXD1
TXD2
TXD3
RXD0
RXD1
RXD2
RXD3
TX_EN
RX_DV
RX_CLK
GTX_CLK
CLK_25M
PPS
RST
XTLI
XTLO
RBIAS
INT
WOL_INT
EP
TRXP0
TRXN0
TRXP1
TRXN1
TRXP2
TRXN2
TRXP3
TRXN3
SIP
SIN
SOP
SON
SD
MDC
MDIO
LED_ACT
LED_LINK1000
LED_LINK10_100
ETH_MDIO_CLK
ETH_MDIO_DATA
PHY_LED_ACTn
PHY_LED_1000n
PHY_LED_10/100n
ETHER_D0P
ETHER_D0N
ETHER_D1P
ETHER_D1N
ETHER_D2P
ETHER_D2N
ETHER_D3P
ETHER_D3N
V3_3ETHJCK
J15
RJ-45 Gigabit
SHLD1
SHLD2
GND_ETH
C204 22pF
C212 22pF
Y3 25MHz
VRTC
R393 10K
R409 10K
R391 100K
R395 22
R406 2.37K
R404 DNI
R405 DNI
R479 DNI
R394 DNI
R390 220
R392 220
C205 DNI
C206 DNI
C207 DNI
C271 0.1uF
C272 0.1uF
R407 DNI 1.5K
R408
VDDSHV6
C213 0.01uF
U26
SN74LVC1G07
SYS_RESETn
PHYADDRESS0 (IPD)
PHYADDRESS1 (IPD)
MODE2[0]
MODE2[1]
MODE2[2]
MODE2[3]
SEL_GPIO_INT
ANA_MOD (IPU)
R411 10K
R413 10K
R414 10K
R419 10K
R422 10K
R426 10K
R431 10K
R435 10K
AM335X_GMII1_TXCLK
AM335X_GMII1_TXD0
AM335X_GMII1_TXD1
AM335X_GMII1_TXD2
AM335X_GMII1_TXD3
AM335X_GMII1_TXEN
R415 ETH_TXCLK
R416 ETH_TXD0
R417 ETH_TXD1
R418 ETH_TXD2
R420 ETH_TXD3
R421 ETH_TXEN
AM335X_GMII1_RXCLK
AM335X_GMII1_RXD0
AM335X_GMII1_RXD1
AM335X_GMII1_RXD2
AM335X_GMII1_RXD3
AM335X_GMII1_RXDV
AM335X_GMII1_REFCLK
AM335X_GMII1_MDIO_CLK
AM335X_GMII1_MDIO_DATA
R423 ETH_RXCLK
R424 ETH_RXD0
R425 ETH_RXD1
R427 ETH_RXD2
R428 ETH_RXD3
R430 ETH_RXDV
R432 ETH_REFCLK
R433 ETH_MDIO_CLK
R434 ETH_MDIO_DATA
Texas Instruments, Inc.
ARM MPU Business Unit
12500 TI Blvd
Dallas, TX 75243
AM335X General Purpose EVM ZCZ Baseboard
Gigabit Ethernet
Size C
Document Number am335x_gpevm_zczbaseboard.dsn
Modified By: Damon Domke
Rev 1.5A
Date: Tuesday, August 21, 2012
Sheet: 13 of 16

MAVRK Connector

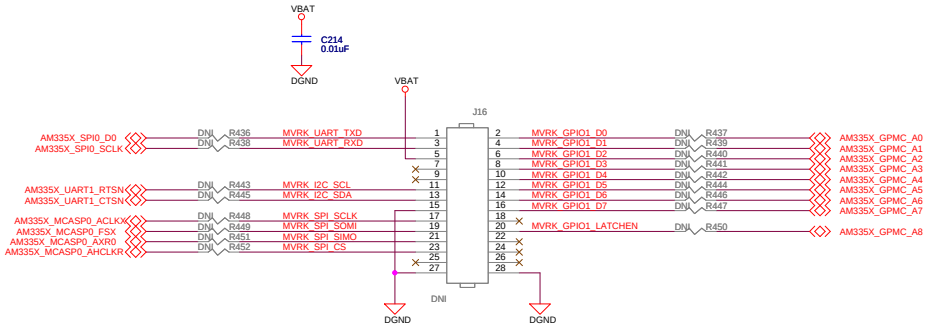

ARM MPU

Texas Instruments, Inc.

ARM MPU Business Unit
12500 TI Blvd
Dallas, TX 75243

TEXAS INSTRUMENTS

AM335X General Purpose EVM ZCZ Baseboard

Analog MAVRK Connector

Size	Document Number	Modified By:	Rev
C	am335x_gpevm_zczbaseboard.dsn	Damon Domke	1.5A

Date: Thursday, August 23, 2012 Sheet: 14 of 16

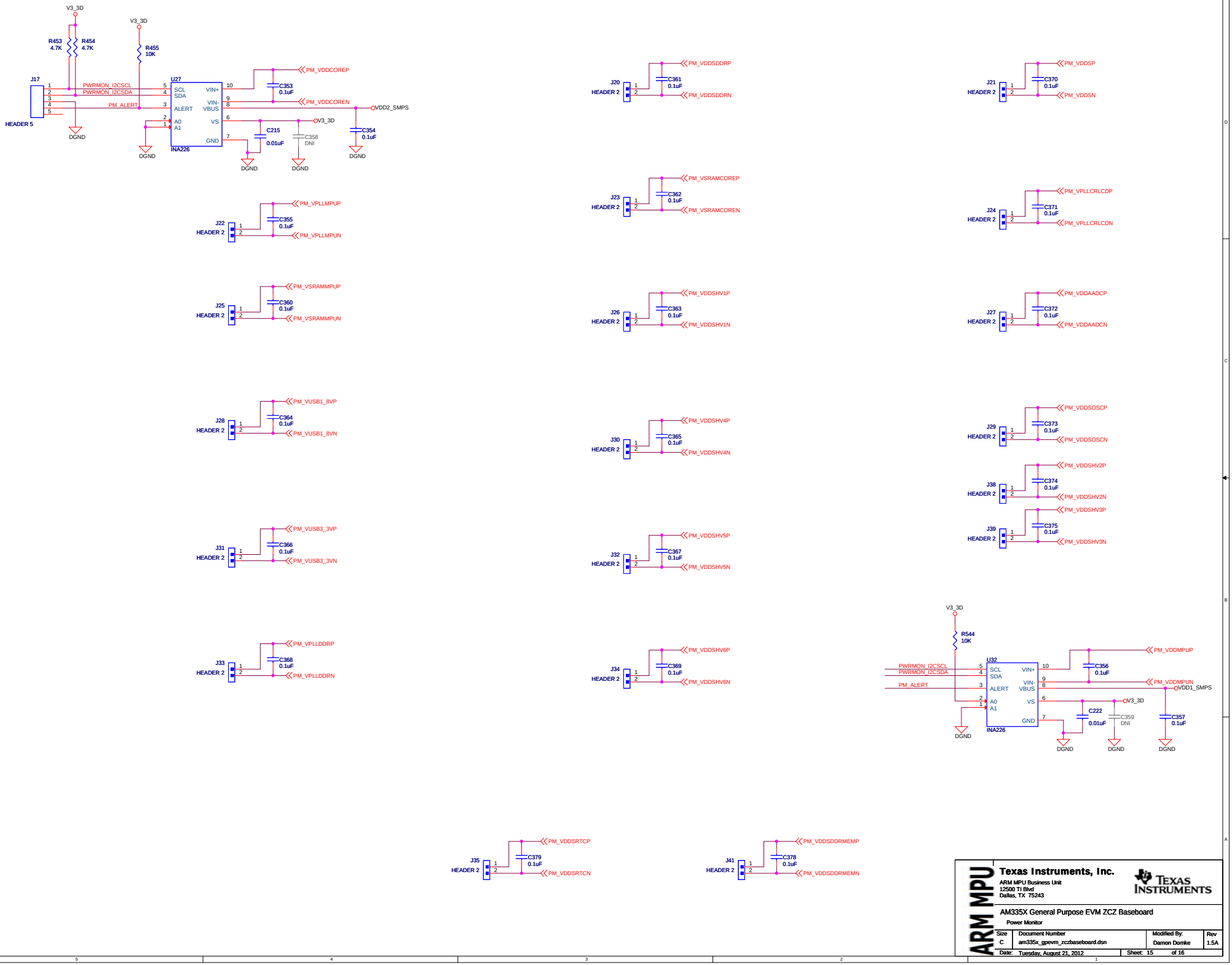

ARM MPU

Texas Instruments, Inc.
ARM MPU Business Unit
12500 TI Blvd
Dallas, TX 75243

AM335X General Purpose EVM ZCZ Baseboard
Power Monitor

Size	Document Number	Modified By:	Rev
C	am335x_gpevm_zczbaseboard.dsn	Damon Domke	1.5A
Date: Tuesday, August 21, 2012		Sheet: 15 of 16	

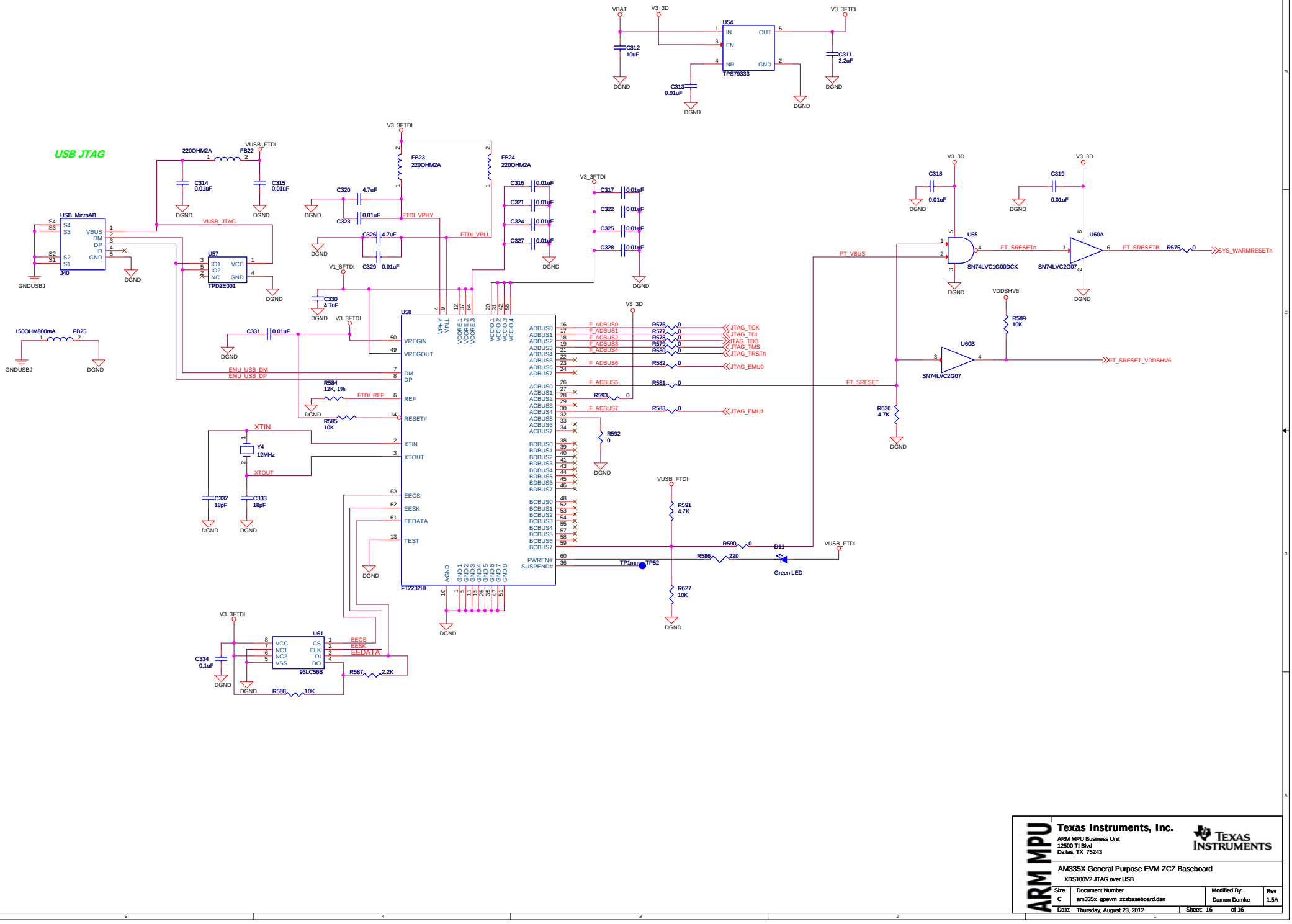

Texas Instruments, Inc.
ARM MPU Business Unit
12500 TI Blvd
Dallas, TX 75243

ARM MPU

AM335X General Purpose EVM ZCZ Baseboard
XDS100V2 JTAG over USB

Size	Document Number	Modified By:	Rev
C	am335x_gpevm_zczbaseboard.dsn	Damon Domke	1.5A
Date: Thursday, August 23, 2012		Sheet: 16 of 16	