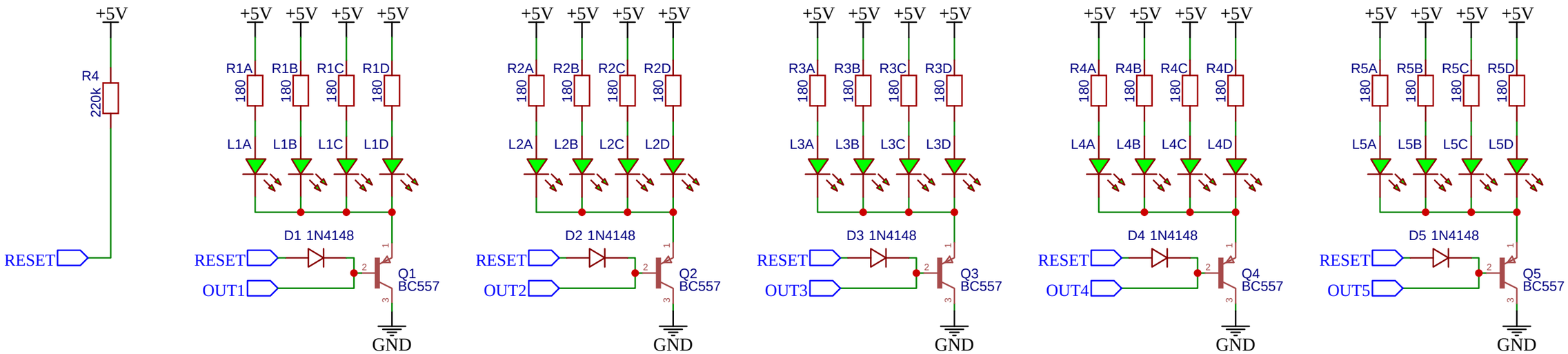

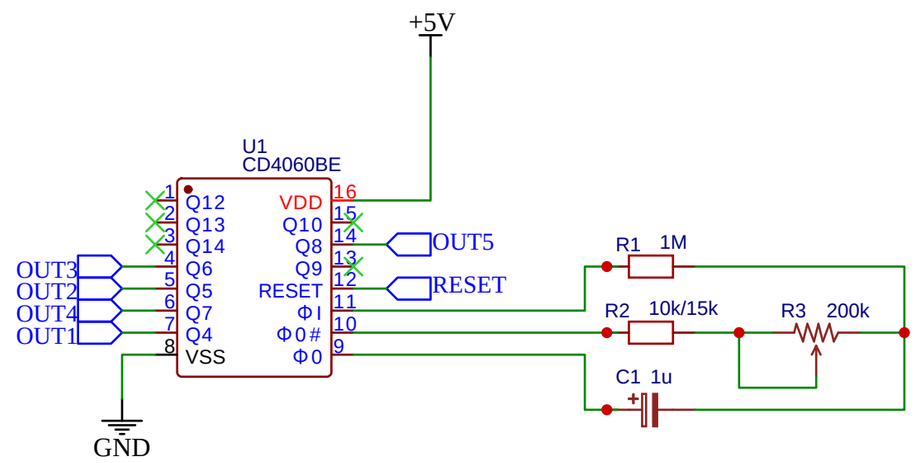

Could you review the clock circuit, the pin names are a bit funny.

Do we need to add a cap close to U1?

Do we need to add a cap over the power source?

Source schematic uses output 2,3,4 (Q5,Q6,Q7) of U1.
Why is output 1 (Q4) skipped (frequency related)?
We have five outputs not three, which do we add?
This schema has 1 and 5 (Q4 and Q8)
or do we want 5 and 6 (Q8 and Q9)?

TITLE: ElektroClub2022		REV: 1.0
EasyEDA	Company: Hobby	Sheet: 1/1
	Date: 2022-01-18 Drawn By: Maarten Pennings	