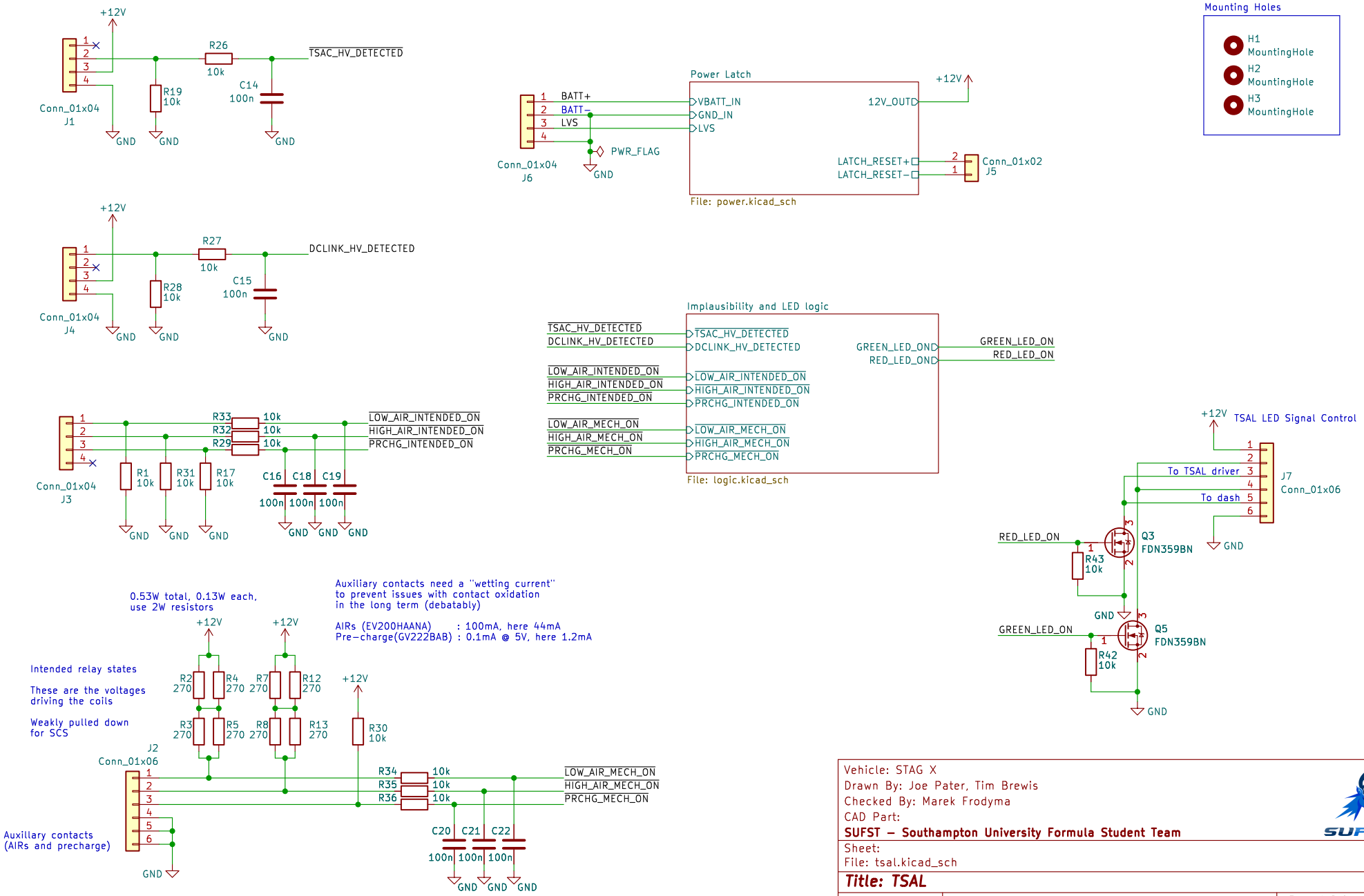

Vehicle: STAG X
Drawn By: Joe Pater, Tim Brewis
Checked By: Marek Frodyma
CAD Part:
SUFST – Southampton University Formula Student Team

Sheet:
File: tsal.kicad_sch

Title: TSAL

Size: A4	Date: 2024-01-09	**Rev: 1.2.0**
KiCad E.D.A. kicad 7.0.9-1.fc38		Id: 1/3

Invert _INTENDED_ON signals

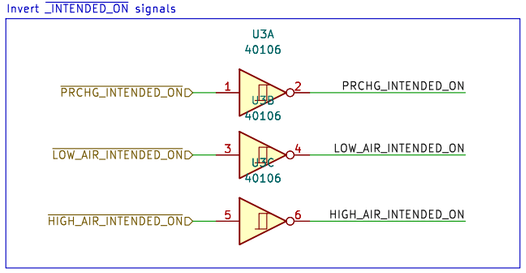

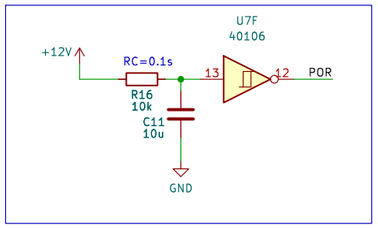

Power + Unused gates

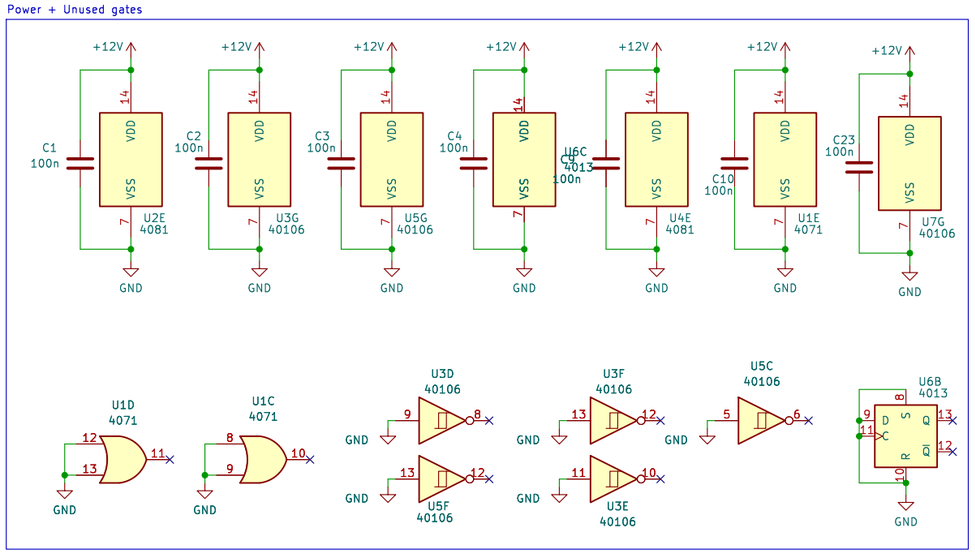

Implausibility logic for green light

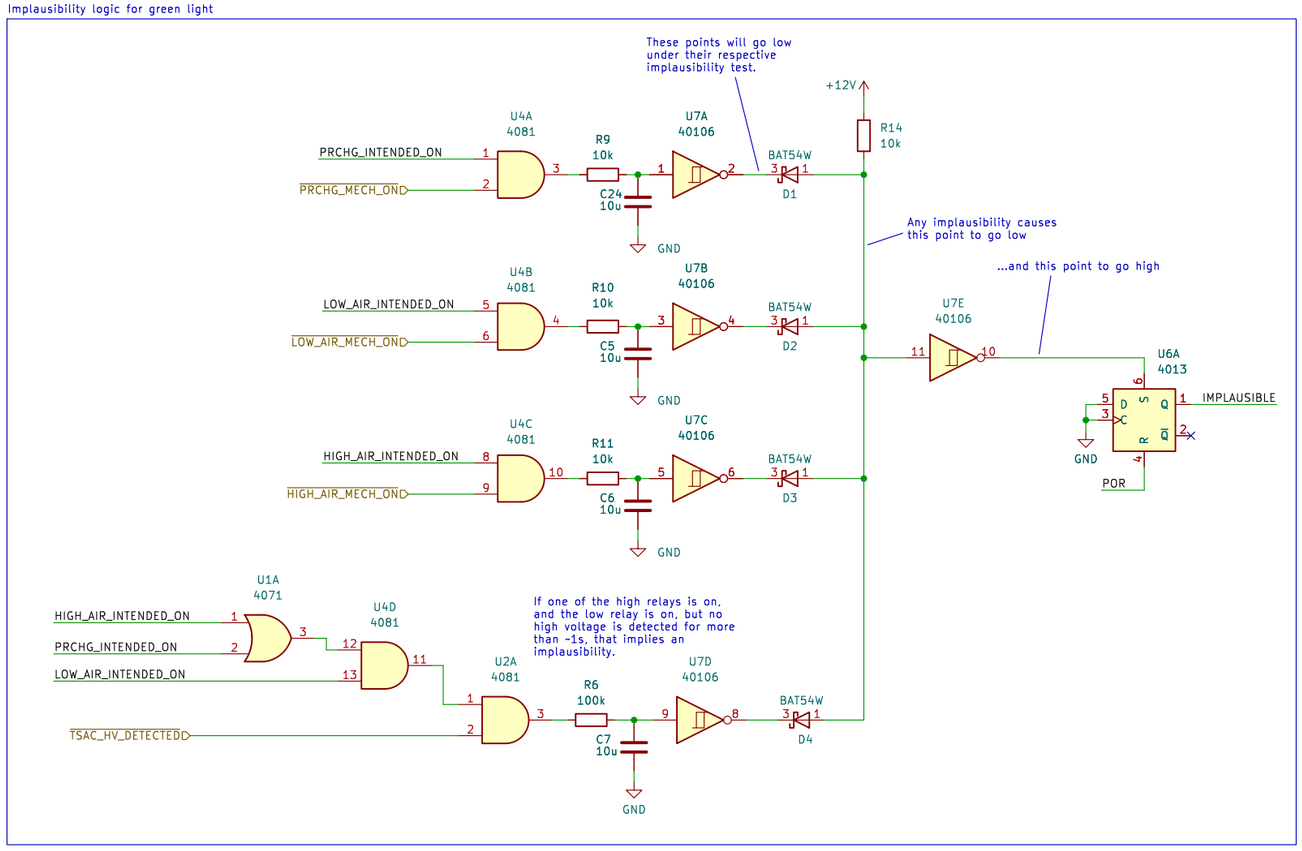

Flashing red LED

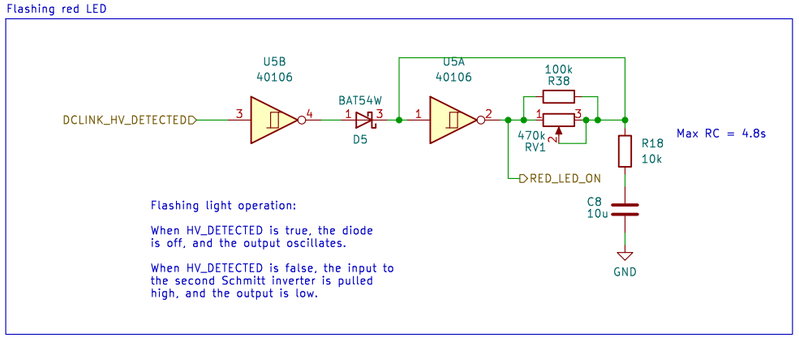

Green LED logic

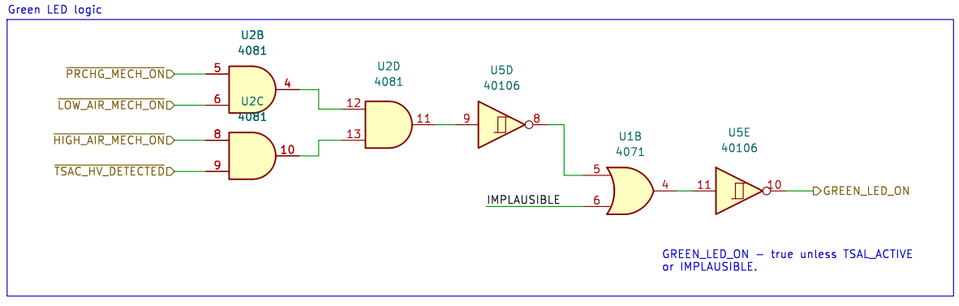

Vehicle: STAG 9 Drawn By: Checked By: Marek Frodyma CAD Part: **SUFST – Southampton University Formula Student Team**		
Sheet: Implausibility and LED logic File: logic.kicad_sch		
Title: HV Sense		
Size: A3	Date: 2023-05-11	**Rev: 1.1.1**
KiCad E.D.A. kicad 7.0.9-1.fc38		Id: 2/3

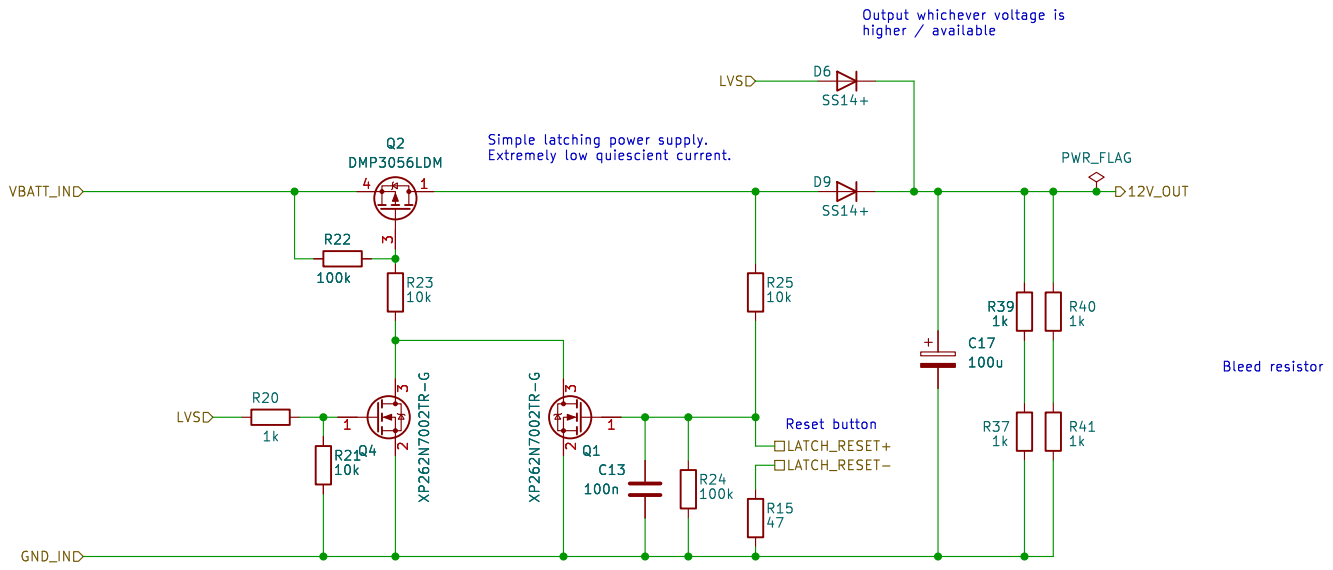

Vehicle:
Drawn By:
Checked By:
CAD Part:

Sheet: Power Latch
File: power.kicad_sch

Title:

Size: A4	Date:	Rev:
KiCad E.D.A. kicad 7.0.9-1.fc38		Id: 3/3