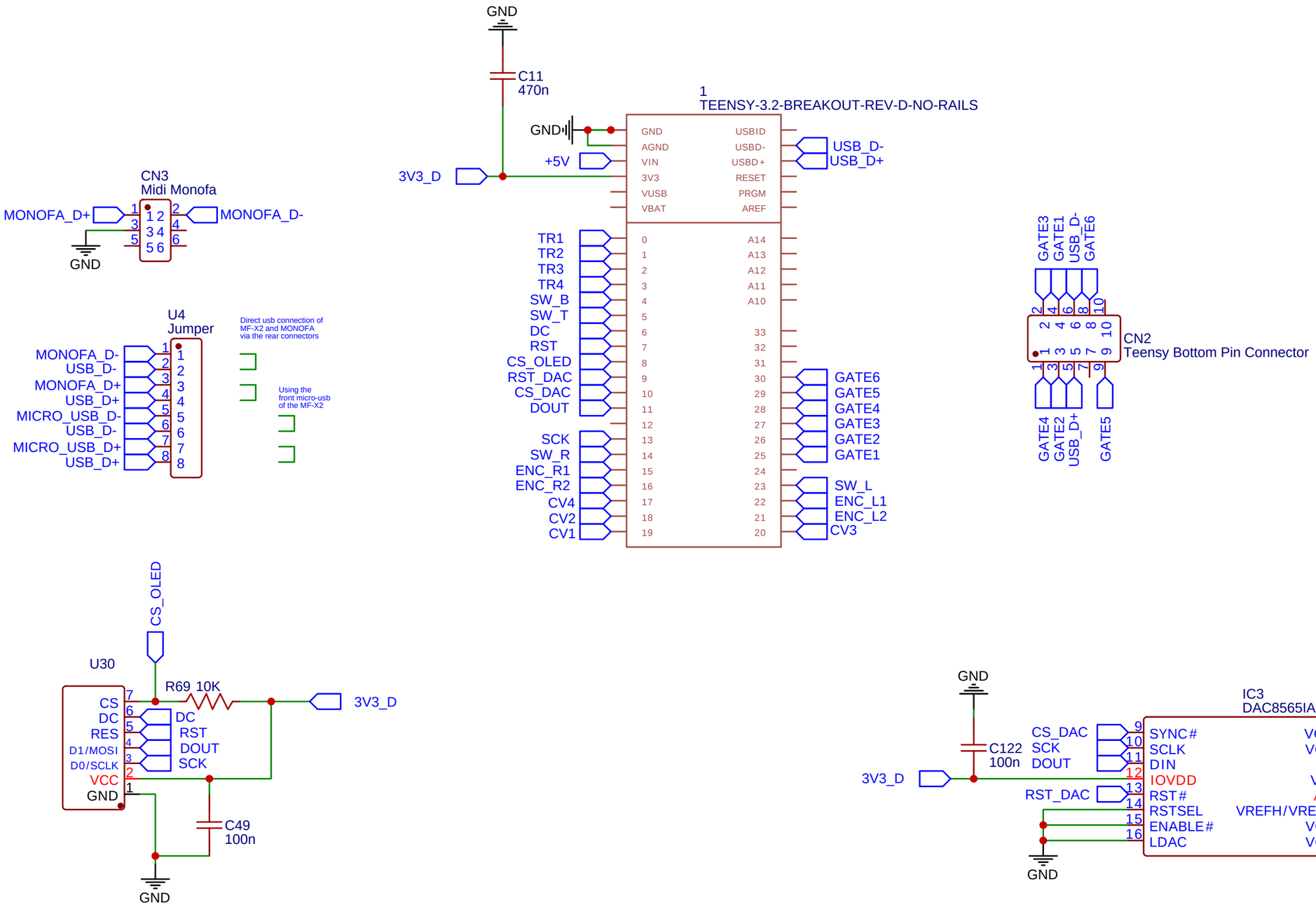

TITLE: Teensy/DAC/Oled/USB		REV: 1.0
EasyEDA	Company: maasijam / mxmxmx	Sheet: 1/1
	Date: 2020-08-22 Drawn By: maasijam	

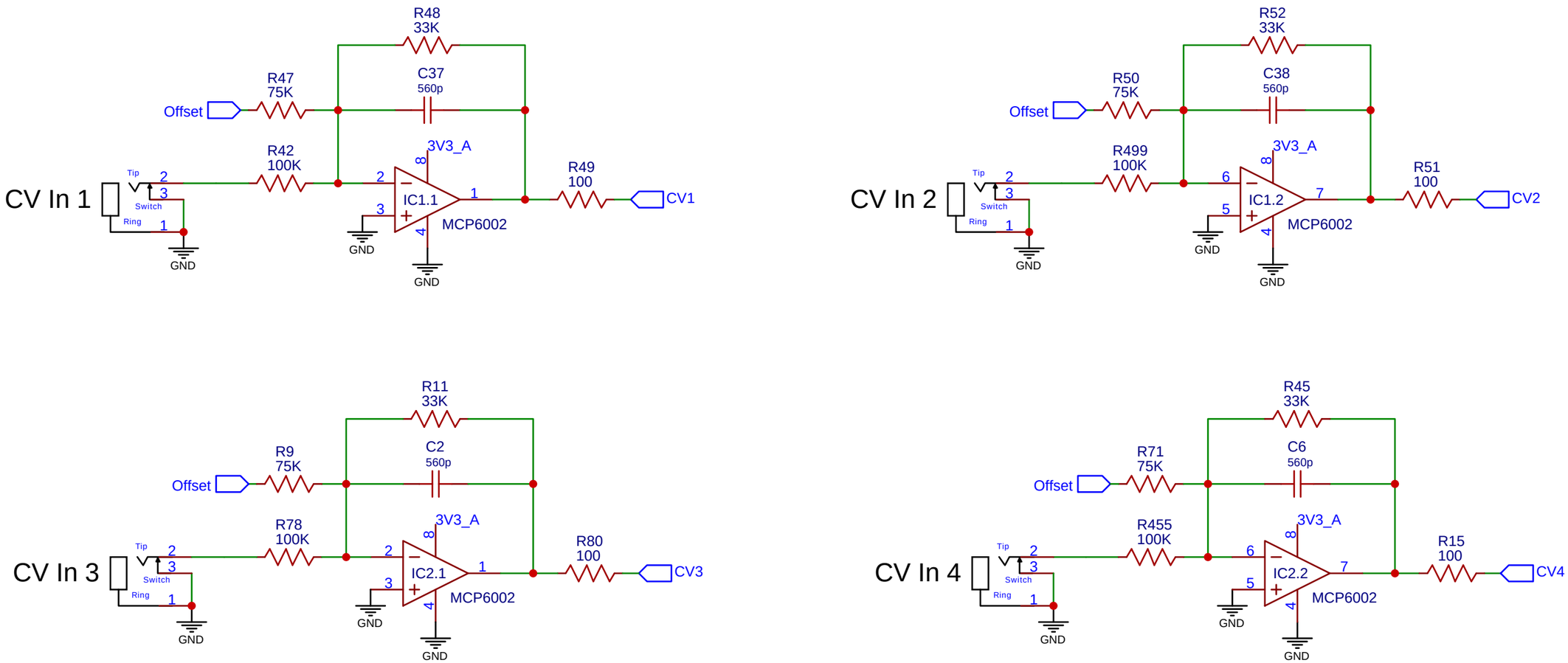

TITLE: CV IN		REV: 1.0
EasyEDA	Company: mxmxmx	Sheet: 1/1
	Date: 2020-08-22 Drawn By: maasijam	

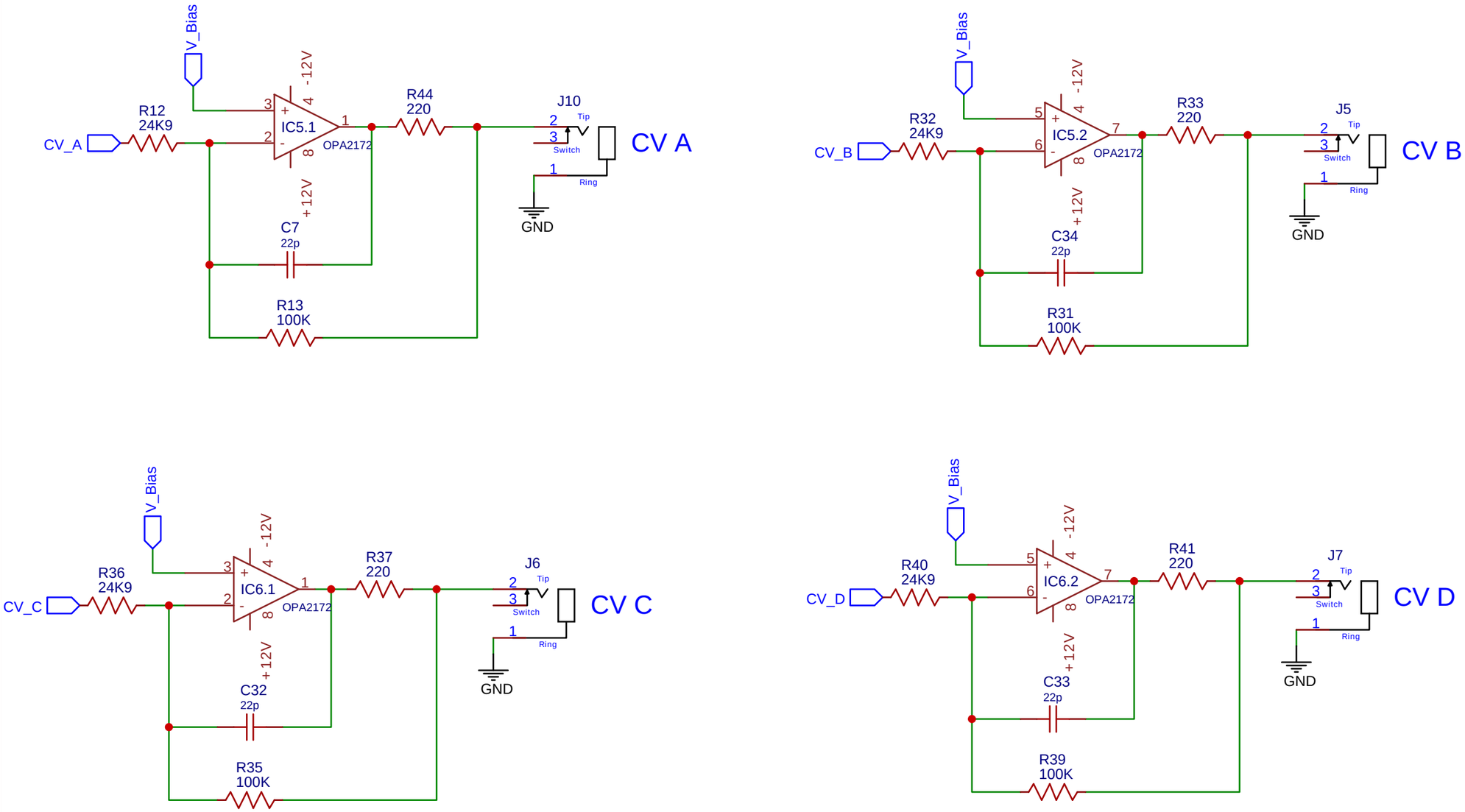

TITLE: CV Outs		REV: 1.0
EasyEDA	Company: mxmxmx	Sheet: 1/1
	Date: 2020-08-22 Drawn By: maasijam	

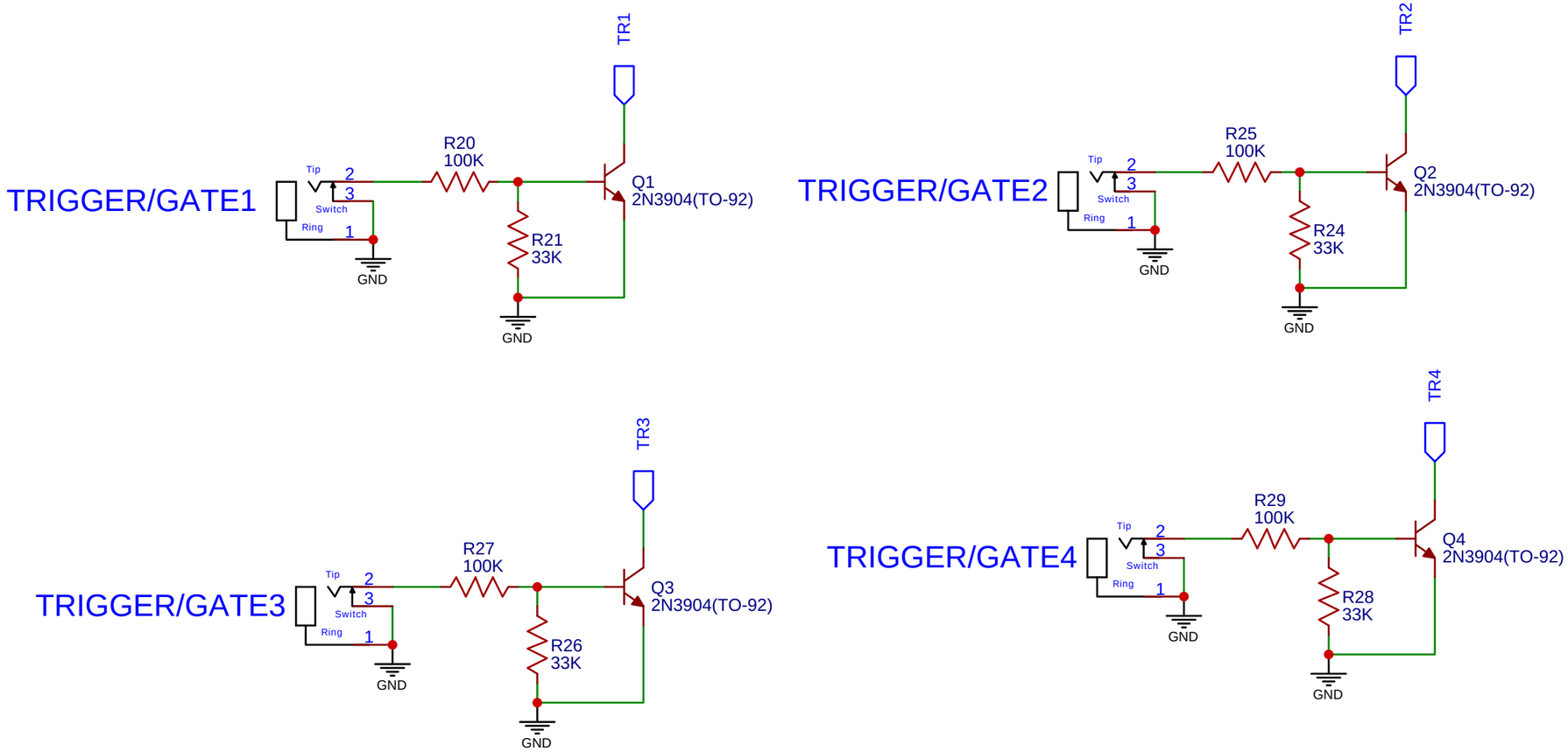

TITLE: Trigger / Gate In		REV: 1.0
EasyEDA	Company: mxmxmx	Sheet: 1/1
	Date: 2020-08-22 Drawn By: maasijam	

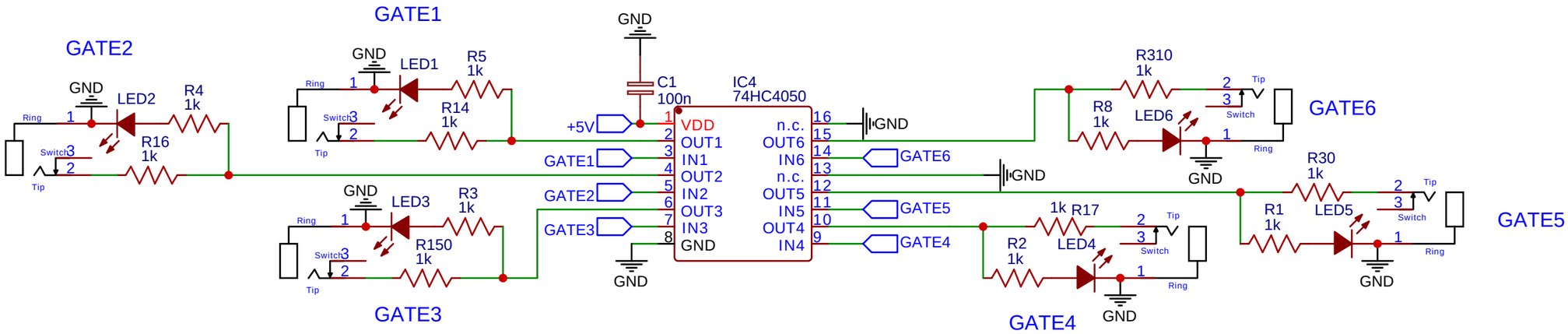

TITLE: Gate Outs / Clock

REV: 1.0

Company: maasijam

Sheet: 1/1

Date: 2020-10-26

Drawn By: maasijam

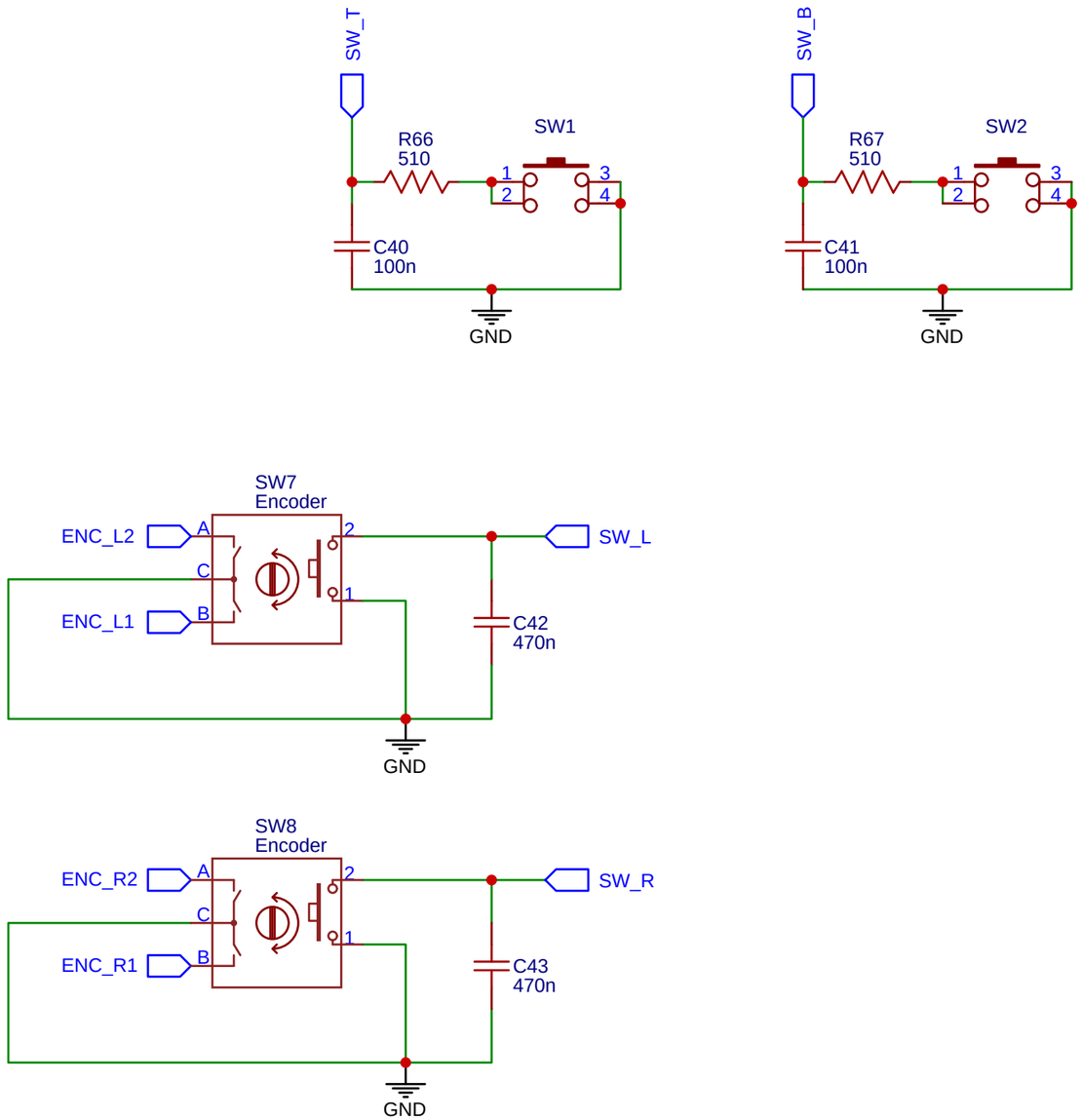

TITLE: Switches/Encoder		REV: 1.0
EasyEDA	Company: mxmxmx	Sheet: 1/1
	Date: 2020-08-22 Drawn By: maasijam	

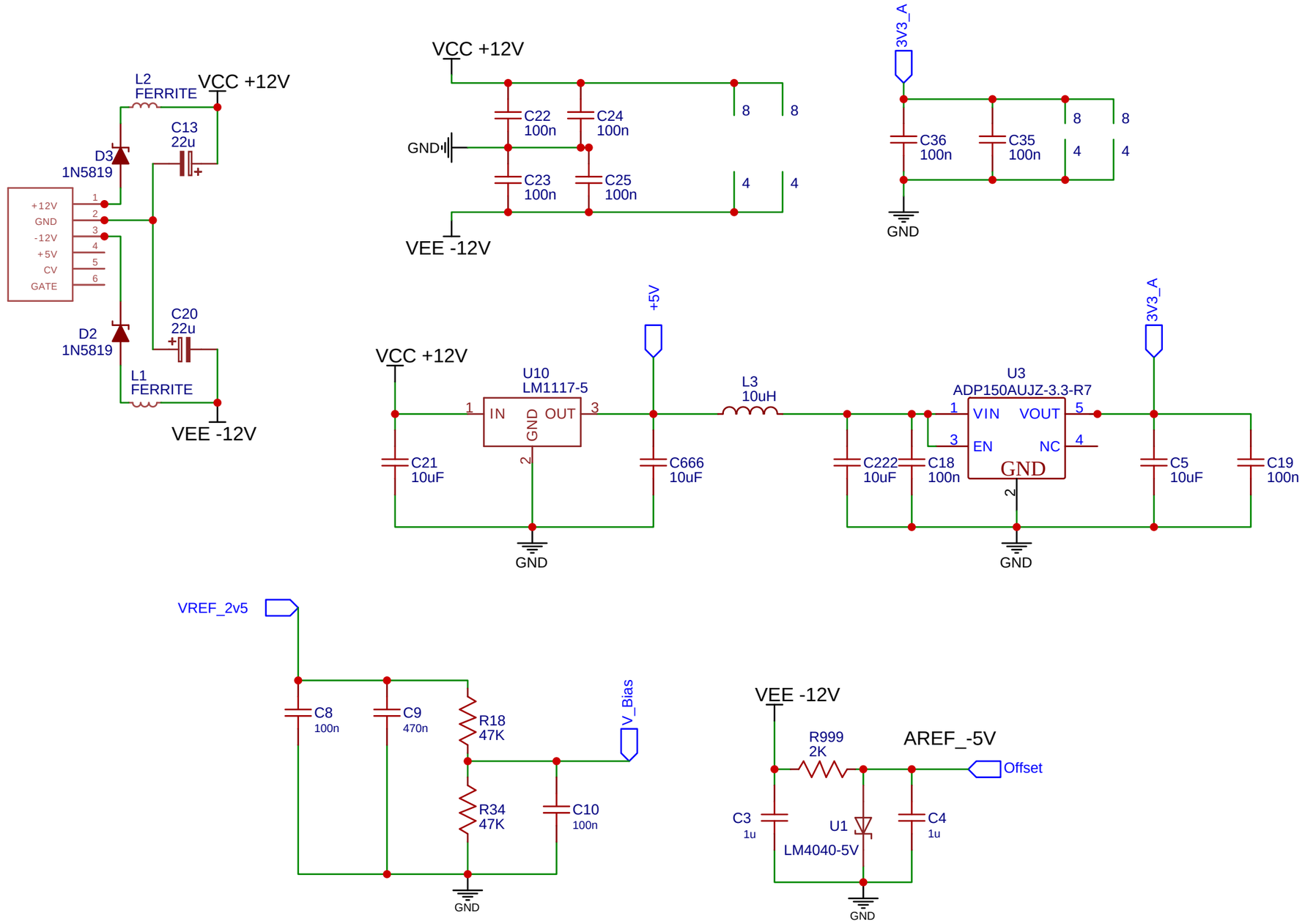

TITLE: Sheet_1	REV: 1.0
EasyEDA	Company: mxmxmx
	Sheet: 1/1
	Date: 2020-08-22 Drawn By: maasijam