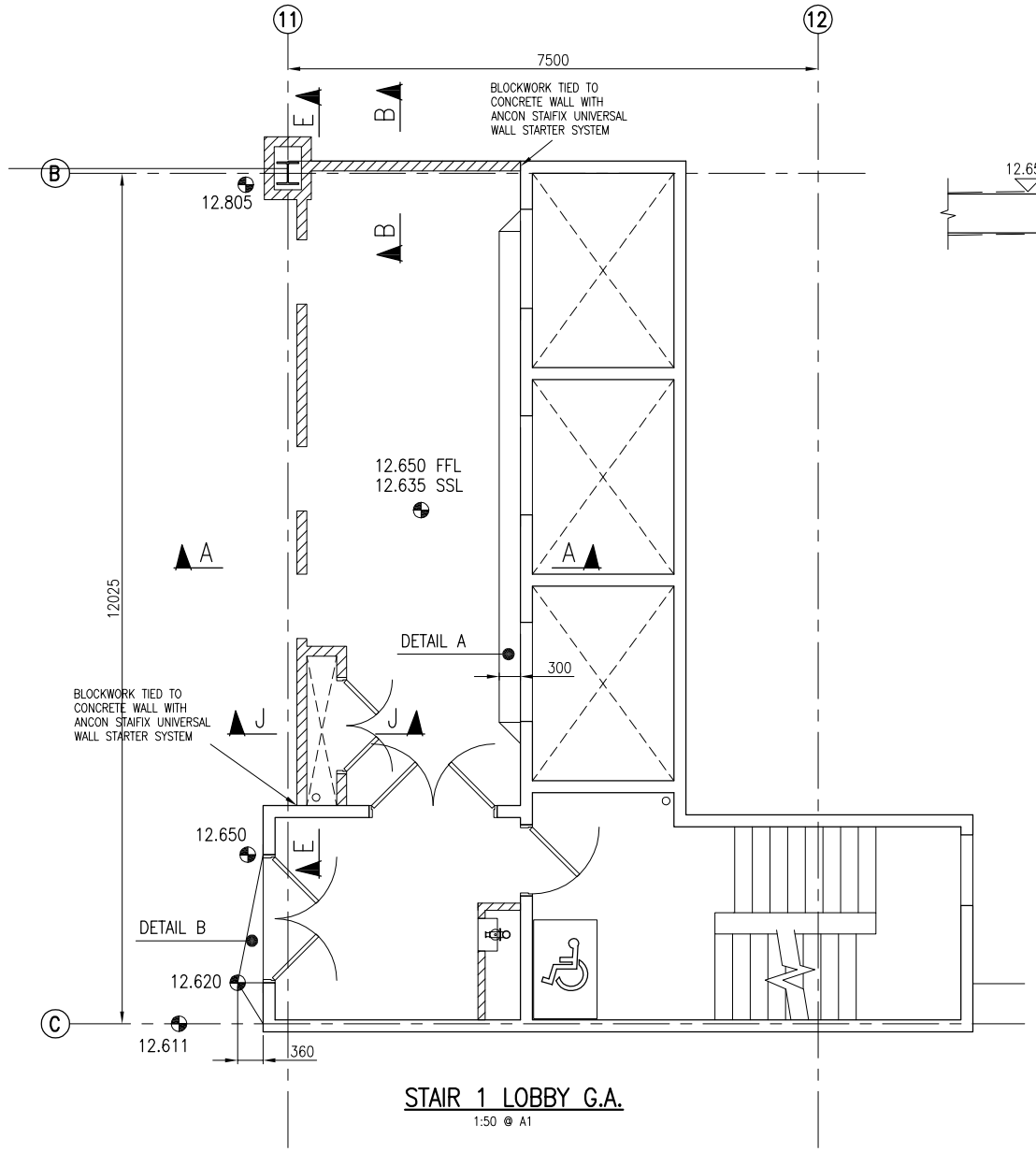

STAIR 1 LOBBY G.A.
1:50 @ A1

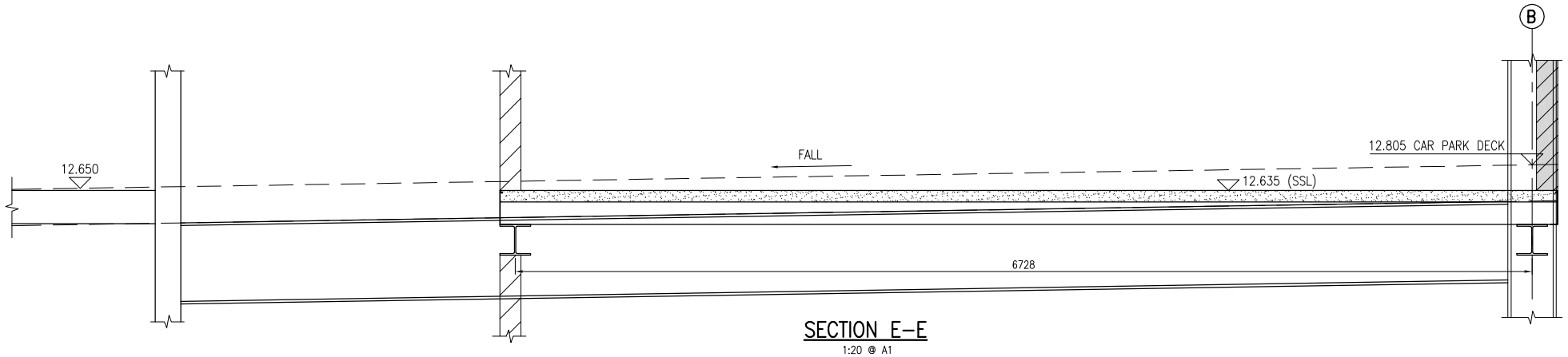

SECTION E–E
1:20 @ A1

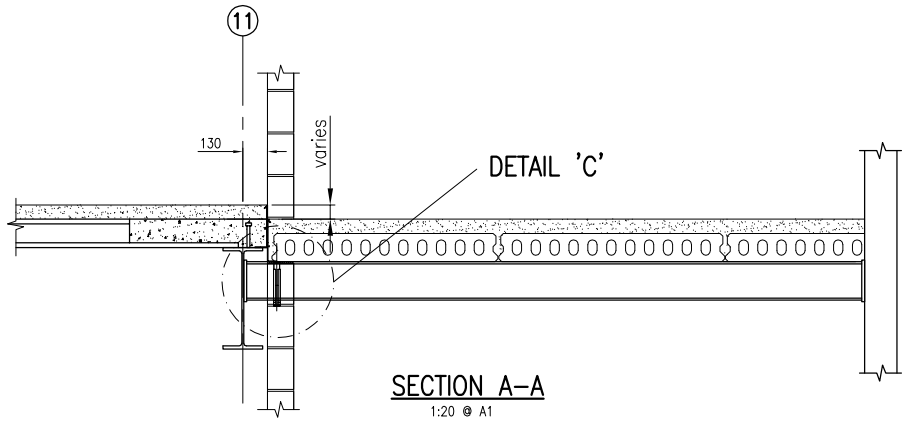

SECTION A–A
1:20 @ A1

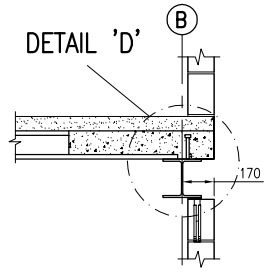

SECTION B–B
1:20 @ A1

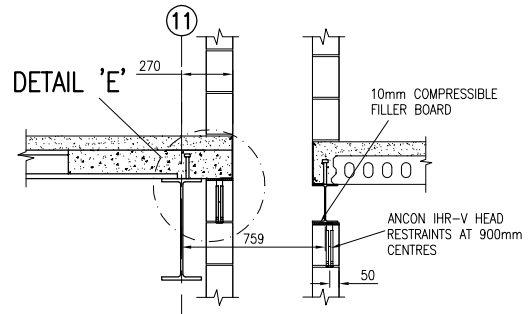

SECTION J–J
1:20 @ A1

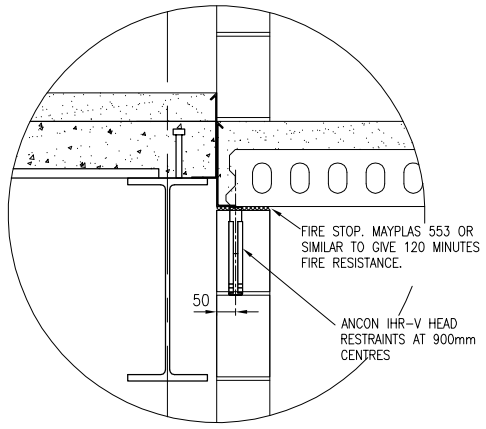

DETAIL 'C'
(SCALE 1:10)

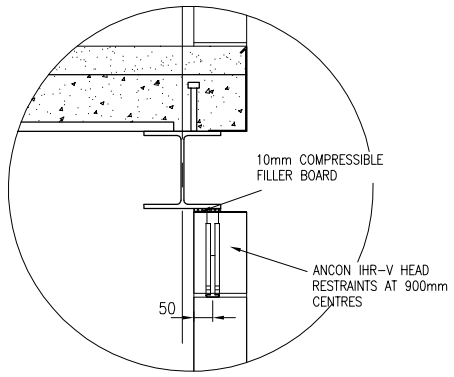

DETAIL 'D'
(SCALE 1:10)

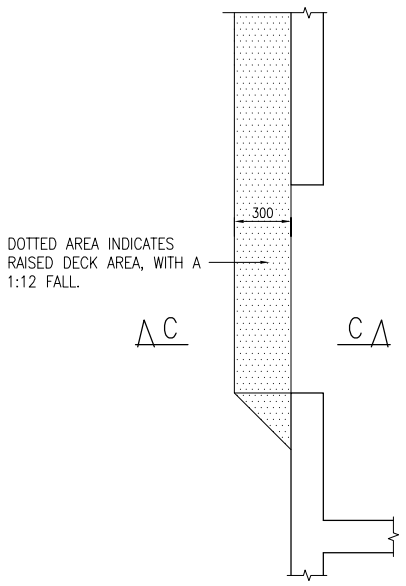

DETAIL A
1:20 @ A1

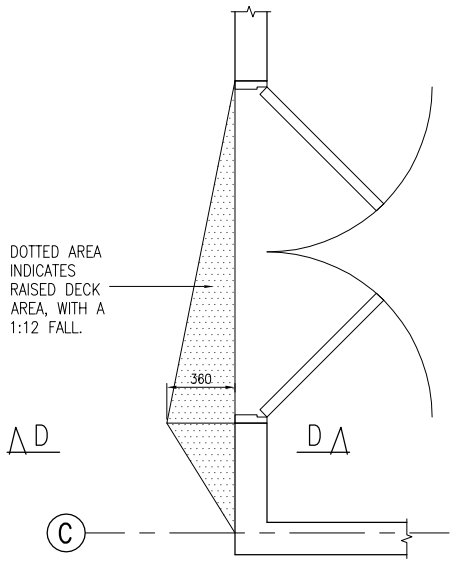

DETAIL B
1:20 @ A1

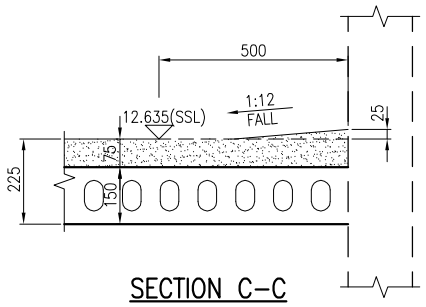

SECTION C–C
1:10 @ A1

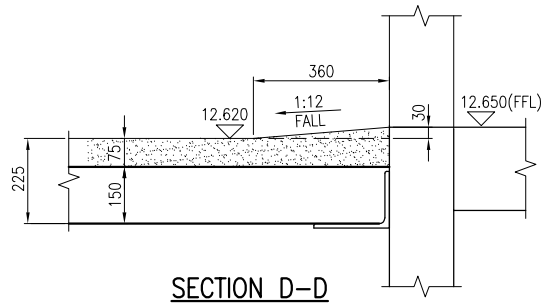

SECTION D–D
1:10 @ A1

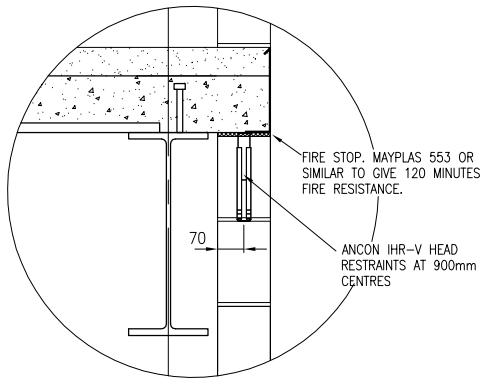

DETAIL 'E'
(SCALE 1:10)

NOTE

This print and any design thereon is the property of HILL CANNON CONSULTING LLP, and is to be returned on request. It is to be used only for the purpose for which it was expressly loaned and is not to be copied in any manner, nor is information taken therefrom to be transmitted or passed to others.

DO NOT scale off this drawing.

DO NOT take digital dimensions off this drawing.

REV	AMENDMENT	BY	CKD	DATE
D	HEAD RESTRAINT DETAILS ADDED.	KS	PJM	20.03.17
C	SECTION E–E REVISED, SECTION J–J ADDED	PJM	SRV	19.08.16
B	DOOR OPENINGS UPDATED, THRESHOLD REVISED, BLOCKWORK WALL UPDATED	PJM	SRV	16.08.16
A	DOOR THRESHOLDS REVISED, BLOCKWORK WALL SETTING OUT UPDATED	PJM	SRV	03.08.16

Client

muse DEVELOPMENTS

Project

WARRINGTON BRIDGE ST QUARTER MSCP

Drawing Title

STAIR 1 LOBBY G.A. – LEVEL 1

HILL CANNON

HILL CANNON CONSULTING LLP, BUSINESS CENTRE, HARTWITH WAY, HARROGATE HG3 2XA
Tel: 01423 813522 Email:harrogate@hillcannon.com

Scale	By	Checked	Date
AS NOTED	PAB	PJM	07.06.16

Status	Drawing No.	Revision
C	15–033(23.1)009	D