Embedded Spatial Mapping System

COMPENG 2DX3 – Microprocessor Systems Project

Final Project Report

Maryam Abbasi – 400589380

Section: L01

Instructors: Dr. Elamien, Dr. Haddara, Dr. Athar

Department of Electrical and Computer Engineering, McMaster University

Submission Date: April 7, 2026

As a future member of the engineering profession, the student is responsible for performing the required work in an honest manner, without plagiarism and cheating. Submitting this work with my name and student number is a statement and understanding that this work is our own and adheres to the Academic Integrity Policy of McMaster University and the Code of Conduct of the Professional Engineers of Ontario.

1 Device Overview

1.1 Device Features

Acquisition & Control • 360° planar distance scanning using the VL53L1X Time-of-Flight (ToF) sensor • 32 distance samples per sweep at 11.25° angular resolution • Default of 20 scan layers at simulated 10 cm displacement (configurable in firmware) • Single push-button Start/Stop (polling on PJ0) • Mid-scan abort with automatic motor de-energization	**Microcontroller** • MSP432E401Y LaunchPad • ARM Cortex-M4F processor operating at 10 MHz system bus (student-specific) • PLL configured: 480 MHz / (PSYSDIV + 1) = 10 MHz • SysTick timer for motor control and LED timing delays • Programmed in C using Keil μVision 5
Stepper Motor • 28BYJ-48 stepper motor with ULN2003 driver module • Full-step control sequence on GPIO pins PH0–PH3 • 2048 steps per shaft revolution • 64 motor steps per 11.25° sampling increment • Automatic 360° counterclockwise unwind after each sweep	**LED Status Indicators (Student # H = 8)** • PF4 – Measurement LED: Blinks once for each ToF distance sample • PF0 – UART TX LED: Active during serial data transmission • PN0 – Scan Active LED: Remains on during the entire acquisition process
Communication – Sensor • I^2C standard mode (100 kHz) on I2C0 • PB2 (SCL) and PB3 (SDA) connections to the VL53L1X sensor • Hardware XSHUT reset on PG0 • API polling using CheckForDataReady() and GetDistance() • Operating Voltage: 3.3 V logic level supplied through the LaunchPad onboard regulator (USB 5 V input)	**Visualization** • MATLAB serial interface used for receiving scan data • 3D wire-frame reconstruction of the scanned environment • Polar-to-Cartesian conversion (Y = R*cosθ, Z = R*sinθ) • Scan-to-scan clipping (400 cm tolerance) • Within-scan spike smoothing (80 cm tolerance) • Blue gradient color mapping applied across scan layers
Communication – PC • UART communication at 115200 baud (8-N-1)	**System Cost** • LaunchPad board: ~$70 [1] • VL53L1X sensor: ~$10 [2] • Stepper motor + driver: ~$5 [3]

• ASCII protocol: DATA, ENDSCAN, DONE, ABORTED • Immediate per-scan transmission following each completed sweep	

Table of Contents

1 Device Overview 2
1.1 Device Features 2
1.2 General Description 4
1.3 Block Diagram (Data Flow Graph) 4
2 Device Characteristics Table 4
2.1 General System Setup 4
2.2 Pin Configuration 5
2.3 LED Configuration 6
3 Detailed Description 6
3.1 Distance Measurement 6
3.2 Visualization 7
4 Application Note, Instructions, and Expected Output 8
4.1 Coordinate System 8
4.2 Hardware Setup 8
4.3 Software Setup 8
4.4 Expected Output 9
4.5 Assigned Campus Location – Comparison 9
5 Limitations 10
5.1 Floating-Point Capability and Trigonometric Functions 10
5.2 Maximum Standard Serial Communication Rate 10
5.3 Communication Between Microcontroller and ToF Sensor 11
5.4 Primary System Speed Limitation 11
5.5 Bus Speed Configuration 11
5.6 LED Status Indicators 11
5.7 Maximum Quantization Error of the ToF Module 12
6 Circuit Schematic 12
7 Programming Logic Flowcharts 12
7.1 Microcontroller Firmware (C / Keil) And PC Visualization Software (MATLAB) 12
References 15

1.2 General Description

The system rotates a VL53L1X Time-of-Flight sensor through 360° using a stepper motor, capturing distance measurements at each angular position to reconstruct a 3D map of the surrounding environment.

The VL53L1X acquires distance data by emitting infrared laser pulses and detecting returned photons via an internal SPAD array. Signal conditioning, timing measurement, and analog-to-digital conversion are all performed internally, so the microcontroller receives pre-digitized distance values over I²C.

The MSP432E401Y controls motor stepping and triggers measurements at each angular increment. Collected data (scan index, angle, displacement, and distance) are transmitted to a PC via UART at 115,200 bps. MATLAB receives the data, converts polar measurements to Cartesian coordinates, and renders a 3D point cloud of the scanned environment.

A block diagram illustrating the major system components is provided in Figure 1.

1.3 Block Diagram (Data Flow Graph)

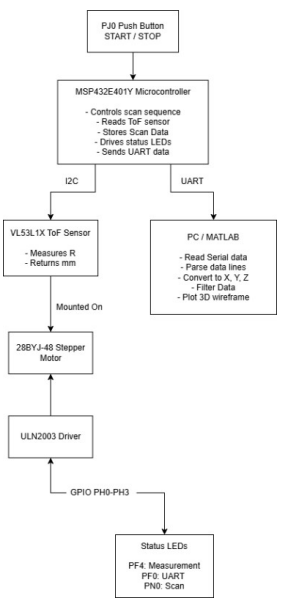

Figure 1: Block Diagram

2 Device Characteristics Table

2.1 General System Setup

Feature	Description
Microcontroller	MSP432E401Y – Texas Instruments
Bus Speed	10 MHz (student-specific, LSD = 0)

Feature	Description
Supply Voltage	5 V USB input; regulated to 3.3 V logic for MCU and sensor
UART Baud Rate	115,200 bps (8-N-1)
UART Peripheral	UART0 connected to PC virtual COM port
Sensor Communication	I^2C standard mode (100 kHz), device address 0x29
Distance Units	Millimeters mm)
Visualization Software	MATLAB
Samples per Scan	32
Number of Scans	Configurable in firmware (default = 20)
Angular Resolution	11.25°
Programming Language (MCU)	C (Keil µVision 5)
Flash Memory	1 MB on-chip
SRAM	256 KB on-chip

2.2 Pin Configuration

Device	Pin	Connected To
VL53L1X	SDA	PB3
VL53L1X	SCL	PB2
VL53L1X	XSHUT	PG0
VL53L1X	VIN	3.3 V
VL53L1X	GND	GND
ULN2003	IN1	PH0
ULN2003	IN2	PH1
ULN2003	IN3	PH2
ULN2003	IN4	PH3
ULN2003	VCC	5 V
ULN2003	GND	GND

Device	Pin	Connected To
Button	PJ0	On-board User Switch 1 (pull-up)

2.3 LED Configuration

LED Pin	Function	Behaviour
PF4	Measurement Status	Blinks once per ToF distance reading
PF0	UART TX Indicator	ON during UART data transmission block
PN0	Scan Active	ON for entire scan sequence; OFF otherwise

3 Detailed Description

3.1 Distance Measurement

The VL53L1X Time-of-Flight sensor measures distance using a 940 nm Class 1 invisible VCSEL laser and an internal SPAD receiver array. The sensor emits a brief infrared pulse; the SPAD array detects the photons that reflect back from the target surface. The on-chip Advanced Ranging Core measures the round-trip photon travel time and converts it to distance in millimetres using:

$$D = (c \times t_{tin}) / 2$$

where c is the speed of light (~3×10^8 m/s) and t_{tin} is the measured photon round-trip time. The result is a 16-bit unsigned millimetre value. Internal signal conditioning and ADC circuitry handle the analog-to-digital conversion entirely within the sensor module; the microcontroller receives only the digital distance value via I^2C.

The MSP432E401Y microcontroller communicates with the sensor over I^2C0 at 100 kHz (standard mode). Pins PB2 (SCL) and PB3 (SDA) are configured for the I^2C peripheral function. The sensor address is 0x29. At startup, the firmware drives PG0 low to assert XSHUT, waits 100 ms, then releases it to allow the sensor to boot. The ST VL53L1X API is used throughout:

- VL53L1X_BootState() – polls for sensor readiness after reset
- VL53L1X_SensorInit() – loads default configuration
- VL53L1X_StartRanging() / VL53L1X_StopRanging() – controls continuous ranging
- VL53L1X_CheckForDataReady() – polls for a fresh sample
- VL53L1X_GetDistance() – retrieves the 16-bit millimetre value
- VL53L1X_ClearInterrupt() – clears the data-ready flag

For each 360° sweep, the firmware performs the following sequence 32 times: (1) query the sensor until data is ready, (2) retrieve the distance and store it along with the current angle and

displacement, (3) blink PF4 to confirm the measurement, (4) advance the stepper motor 64 steps (11.25°) clockwise. After the final sample, the motor takes one additional 64-step increment to complete the mechanical cycle, the scan data is transmitted over UART, and then the motor reverses 2048 steps to unwind. This process repeats for each scan layer.

The stepper motor is a 28BYJ-48 driven by a ULN2003 module. Pins PH0–PH3 output a four-state full-step sequence {0x03, 0x06, 0x0C, 0x09}. With 2048 steps per revolution, each full step corresponds to 360°/2048 = 0.176°. Sixty-four steps yield exactly 11.25° of sensor rotation. A 10 ms SysTick delay is inserted between steps to ensure the motor is mechanically stable before the measurement is taken.

3.2 Visualization

The MATLAB script opens a serial port object (COM7 at 115,200 baud) and enters a read loop, parsing lines until a DONE or ABORTED sentinel is received. Each DATA line has the form:

```
DATA,<scan_idx>,<disp_cm>,<angle_hundredths>,<dist_mm>
```

The angle in hundredths of a degree is divided by 100 to obtain degrees. Distance is converted from millimetres to centimetres. Polar-to-Cartesian conversion uses:

$$Y = R \cdot \cos(\theta) \qquad Z = R \cdot \sin(\theta) \qquad X = displacement$$

The conversion from polar coordinates to Cartesian coordinates is performed on the PC in MATLAB after the raw distance and angle data are transmitted via UART. Here, R is the radial distance in cm and θ is the angle in degrees. The x-coordinate is the simulated displacement value (0, 10, or 20 cm).

Example Calculation:

If the sensor measures a distance of R = 150 cm at an angle of θ = 45° and the displacement is X = 10 cm:

Y = 150 cos(45°) = 106.1 cm

Z = 150 sin(45°) = 106.1 cm

Therefore, the resulting coordinate is:

(X, Y, Z) = (10 cm, 106.1 cm, 106.1 cm)

Two post-processing filters are applied before plotting. Scan-to-scan clipping: any point in scan k that exceeds the corresponding point in scan k−1 by more than 400 cm is replaced with the previous scan's value, suppressing reflections at the sensor's maximum range. Within-scan spike smoothing: any sample whose deviation from the mean of its two neighbours exceeds 80 cm is replaced with that mean, removing isolated erroneous readings.

Visualization is performed with MATLAB's plot3() function. Each scan layer is drawn as a closed polyline in 3D space using a blue colour gradient (light blue for the first scan, dark blue for the last). Dashed vertical lines connect corresponding angular positions across adjacent scan layers to form a wire-frame mesh. The result is a 3D wire-frame reconstruction of the scanned interior. Axes are labelled X displacement (cm), Y (cm), and Z (cm), with axis equal and grid on applied for spatial accuracy.

4 Application Note, Instructions, and Expected Output

4.1 Coordinate System

In this system, the y-z plane represents the vertical spatial slice captured during a single 360° rotation. The sensor is located at the origin of the coordinate system for each scan layer. Y is the horizontal distance component ($Y = R \cdot \cos\theta$) and Z is the vertical distance component ($Z = R \cdot \sin\theta$). The x-axis represents the displacement between scan positions; in this implementation multiple scans are taken at the same physical location and assigned simulated displacements (0, 10, 20 cm, etc.). The number of scan layers is configurable in firmware, with a default value of 20. In a real deployment, the sensor assembly would be physically moved 10 cm along the x-axis between scans.

4.2 Hardware Setup

Required hardware:

- MSP432E401Y LaunchPad microcontroller board
- VL53L1X Time-of-Flight sensor breakout board (remove protective liner before use)
- 28BYJ-48 stepper motor with ULN2003 driver module
- USB cable (power supply and UART communication)
- Jumper wires

Wiring connections:

Signal	VL53L1X / ULN2003 Pin	LaunchPad Pin
SDA	SDA	PB3
SCL	SCL	PB2
XSHUT	XSHUT	PG0
Sensor VIN	VIN	3.3 V
Sensor GND	GND	GND
Motor IN1	IN1	PH0
Motor IN2	IN2	PH1
Motor IN3	IN3	PH2
Motor IN4	IN4	PH3
Motor VCC	+	5 V
Motor GND	−	GND

4.3 Software Setup

1. Install Keil µVision 5 and the MSP432E401Y device pack.

2. Open the project, set the target device to MSP432E401Y, then build and flash the firmware.
3. Press the on-board RST button to reboot the microcontroller. The terminal will print "System booted" followed by "ToF ready" once the sensor has initialised.
4. In MATLAB, open the visualization script. Set port = "COMX" to match the LaunchPad's XDS110 UART port (find it in Windows Device Manager under Ports → XDS110 Class Application/User UART). Set baud rate = 115200.
5. Run the MATLAB script. It will display: "Now press the board button to start scanning..."
6. Press PJ0 (on-board User Switch 1). PN0 (Scan Active LED) turns on. The motor begins stepping and PF4 blinks for each measurement. The MATLAB command window streams DATA lines in real time.
7. After twenty scans and the cable unwind, the microcontroller sends DONE. MATLAB closes the serial port and displays the 3D wire-frame plot.
8. To abort mid-scan, press PJ0 again. The motor de-energises, ABORTED is printed over UART, and PN0 turns off.

4.4 Expected Output

On a successful run of the default configuration (20 scans × 32 samples), the MATLAB command window will display 640 DATA lines (plus 20 ENDSCAN lines), followed by DONE. The 3D plot will show three closed-loop wire-frame rings connected by vertical dashed lines, forming a hollow tube-like reconstruction of the scanned interior. The rings are colour-coded from light blue (first scan) to dark blue (last scan).

4.5 Assigned Campus Location – Comparison

Figure 2: Photograph of the assigned campus hallway scan location.

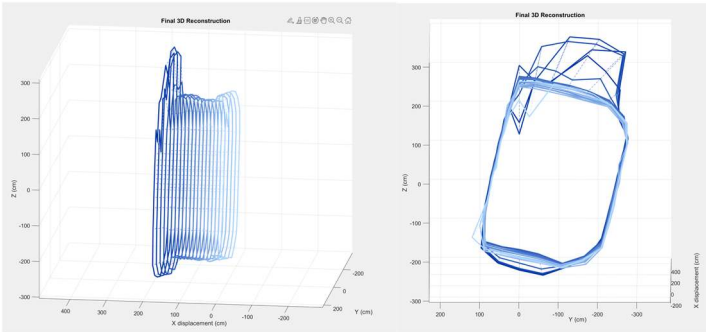

Figure 3: MATLAB 3D wire-frame reconstruction generated from scan data collected at the assigned location.

The reconstructed wire-frame model captures the general geometry of the hallway shown in Figure 1. The nearly rectangular shape corresponds to the surrounding walls, while the elongated dimension reflects the length of the corridor. Variations and irregular edges in the plot are caused by measurement noise, limited angular resolution (11.25°), and reflections from objects such as doors, wall fixtures, and ceiling features. Despite these distortions, the reconstruction successfully identifies the overall boundary of the space and demonstrates the ability of the system to map indoor environments using time-of-flight distance measurements.

5 Limitations

5.1 Floating-Point Capability and Trigonometric Functions

The MSP432E401Y's ARM Cortex-M4F includes a hardware FPU supporting single-precision (32-bit) IEEE-754 arithmetic, providing approximately seven significant decimal digits. However, trigonometric functions such as sin() and cos() are not hardware-implemented and must be evaluated via software polynomial approximations (e.g., Taylor series), introducing additional truncation and rounding errors on top of the inherent single-precision limitation.

To avoid compounded floating-point error, trigonometric coordinate conversion is offloaded entirely to MATLAB, where 64-bit double-precision arithmetic is available. The firmware transmits angles as integers in hundredths of a degree (e.g., 1125 for 11.25°), eliminating floating-point computation during acquisition. MATLAB divides by 100 and applies cosd()/sind() in double precision to compute final Cartesian coordinates, minimizing numerical error while reducing computational load on the embedded system.

5.2 Maximum Standard Serial Communication Rate

The maximum standard UART baud rate supported by the XDS110 USB-to-UART bridge (visible in Windows Device Manager under Port Settings) is 3,000,000 bps, though the highest rate reliably supported by MATLAB's serialport() is 921,600 bps. For this project, 115,200 bps was used, consistent with the lab configuration.

Verification was performed using MATLAB's serialport("COMx", 115200), confirming all 640 DATA lines per run were received without dropped characters. RealTerm and an oscilloscope were also used to confirm correct UART framing (1 start + 8 data + 1 stop bits at ~8.68 µs/bit),

with each ~35-character DATA line transmitting in roughly 3 ms — well within the ~20 s inter-scan gap.

5.3 Communication Between Microcontroller and ToF Sensor

The VL53L1X sensor communicates with the MSP432E401Y over I²C in standard mode at 100 kHz, using I2C0 with PB2 as SCL and PB3 as SDA. Each GetDistance() cycle involves multiple register reads (check ready, read 16-bit value, clear interrupt), requiring approximately 3–5 transactions of 2–3 bytes each.

5.4 Primary System Speed Limitation

The primary bottleneck is the stepper motor step delay. Each 11.25° sample requires 64 steps at a 10 ms SysTick delay, totalling ~640 ms of motor time per increment. Over 32 angular samples per sweep, this gives roughly 20.5 seconds of motor stepping per scan. The 2048-step CCW unwind adds a further ~20 s between scans.
The ToF sensor's default timing budget (~50 ms per measurement) is a secondary limitation, though much of this overlaps with motor stepping. UART transmission of one scan layer (~32 × 35 characters × 86.8 µs ≈ 97 ms total) is over two orders of magnitude faster than the motor/sensor cycle and is not a bottleneck.
Verification was performed by toggling PK0 at the start and end of the motor step loop and observing the signal on the AD3 oscilloscope, confirming the expected ~640 ms period per 11.25° increment.

5.5 Bus Speed Configuration

Per Table 1 of the project specification, a student number whose least significant digit (LSD) is 0 requires a 10 MHz system bus speed. The MSP432E401Y system clock is configured using the PLL to generate a 480 MHz internal clock, which is divided by the system divider parameter PSYSDIV:

$$fsys = \frac{480MHz}{PSYSDIV + 1}, PSYSDIV = 47$$

$$fsys = \frac{480}{48} = 10MHz$$

The PLL_Init() function configures the required register fields to achieve this clock frequency. To verify the achieved bus speed, the BusSpeedProofMode() function toggles PK0 in a tight loop with no inserted delays. The AD3 oscilloscope was used to measure the resulting waveform.

Since each GPIO write requires two bus cycles, the expected toggle period is:

$$\frac{2}{10MHz} = 200ns$$

which corresponds to a 5 MHz square wave. The measured waveform on the AD3 confirmed this expected period, validating the 10 MHz system bus speed.

5.6 LED Status Indicators

Per Table 2 of the project specification, the second least significant digit H = 8 assigns:

- PF4 – Measurement Status LED: blinks once per distance sample to provide real-time visual feedback that the ToF sensor has acquired and stored a valid reading.
- PF0 – UART TX Indicator: set high at the beginning of each scan's UART transmission block (SendOneScanData()) and cleared after transmission completes, indicating active PC communication.
- PN0 – Scan Active / Additional Status LED: set high at the start of a scanning session and cleared when scanning ends or is aborted, indicating that the acquisition state machine is running.

5.7 Maximum Quantization Error of the ToF Module

The VL53L1X outputs distance measurements as a 16-bit unsigned integer in millimetres. This means the smallest representable increment in the reported distance is 1 mm. The quantization error of a digital measurement system is equal to half of the least significant bit (LSB), giving a maximum quantization error of:

$$Qmax = \frac{1mm}{2} = \pm 0.5mm$$

This quantization error is negligible for indoor spatial mapping. In practice, the dominant uncertainty sources are the angular positioning error of the stepper motor (approximately ±5% non-cumulative step error) and the VL53L1X sensor's intrinsic ranging error (typically ±1–3% of the measured distance for targets beyond approximately 1 m).

6 Circuit Schematic

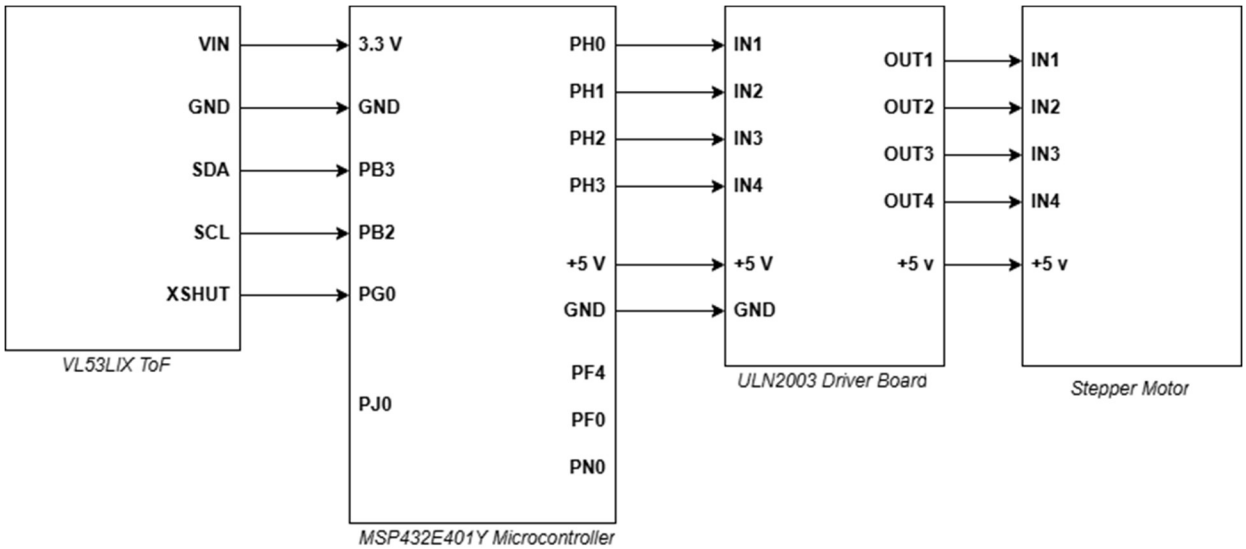

Figure 4: Circuit Schematic

7 Programming Logic Flowcharts

7.1 Microcontroller Firmware (C / Keil) And PC Visualization Software (MATLAB)

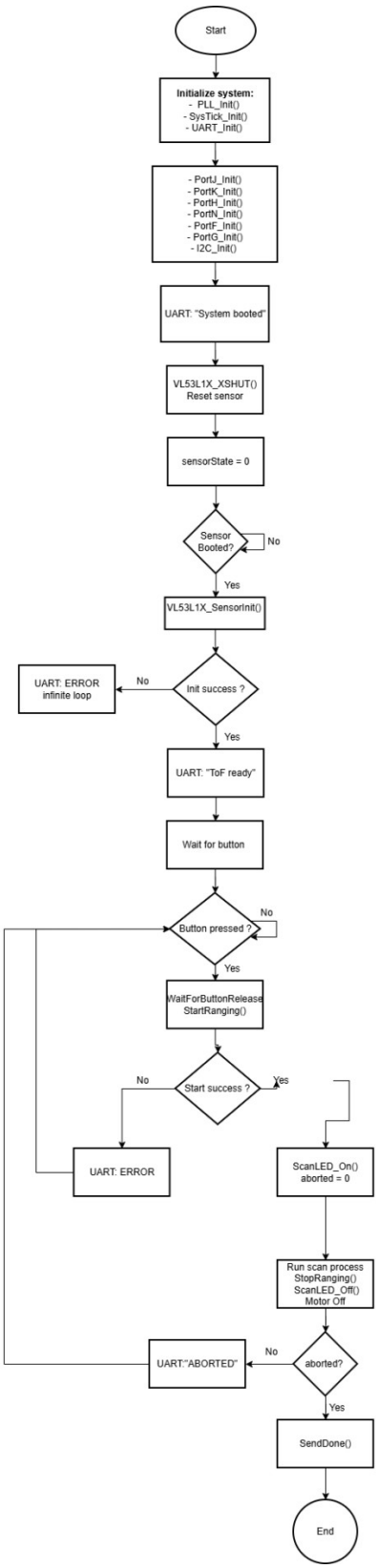

Figure 5:Keil Firmware Flowchart

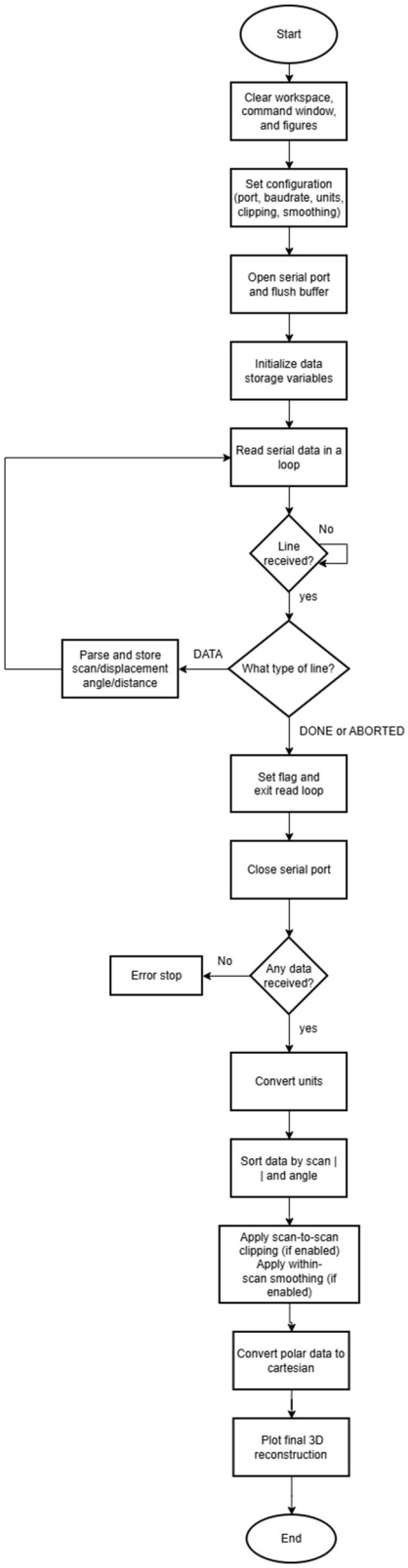

Figure 6: MATLAB Flowchart

References

[1] “MSP-EXP432E401Y,” DigiKey Electronics. Accessed: Apr. 07, 2026. [Online]. Available: https://www.digikey.ca/en/products/detail/texas-instruments/MSP-EXP432E401Y/8106010

[2] “VL53L1X Time-of-Flight (ToF) Long Distance Ranging Sensor,” DigiKey. Accessed: Apr. 07, 2026. [Online]. Available: https://www.digikey.ca/en/product-highlight/s/stmicroelectronics/vl53l1x-tof-long-distance-ranging-sensor

[3] “5 vdc stepper motor with uln2003 driver board.” Accessed: Apr. 07, 2026. [Online]. Available: https://www.velleman.eu/products/view/5-vdc-stepper-motor-with-uln2003-driver-board-vma401/?id=435560&country=ca&lang=en