BORRONI DESIGN

Luxury Interior Hardware

MMXXVI

Index

Intro	5
Handles	6
Knobs	45
Door Handles	23
Hangers	23
Materials and options	27
Furniture design	30

About

Behind the idea of creating the best possible hardware was the need of firstly respond to a personal necessity, which has been to complete my own furniture with something special in all aspects. Original style, best materials, peculiar finishes, and an overall a reflection of my taste, to be made real.

HANDLES

MNMB001

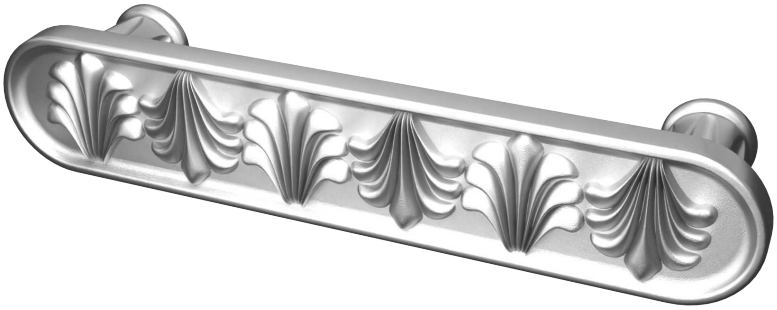

Sacred Leaves

Available in: Aluminium or Stainless steel

Measures:
130 x 26 x 28 mm

Design: M. Borroni

MNMB001

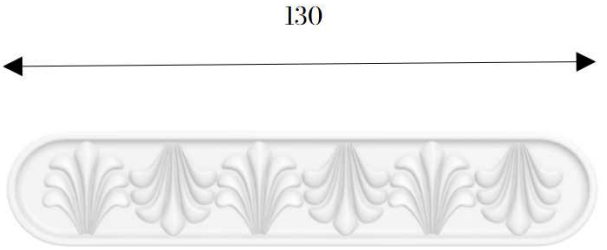

Crystal

Available in: Titanium and Glass

Measures:
142 x 20 x 40 mm

Design: M. Borroni

MNMB 005

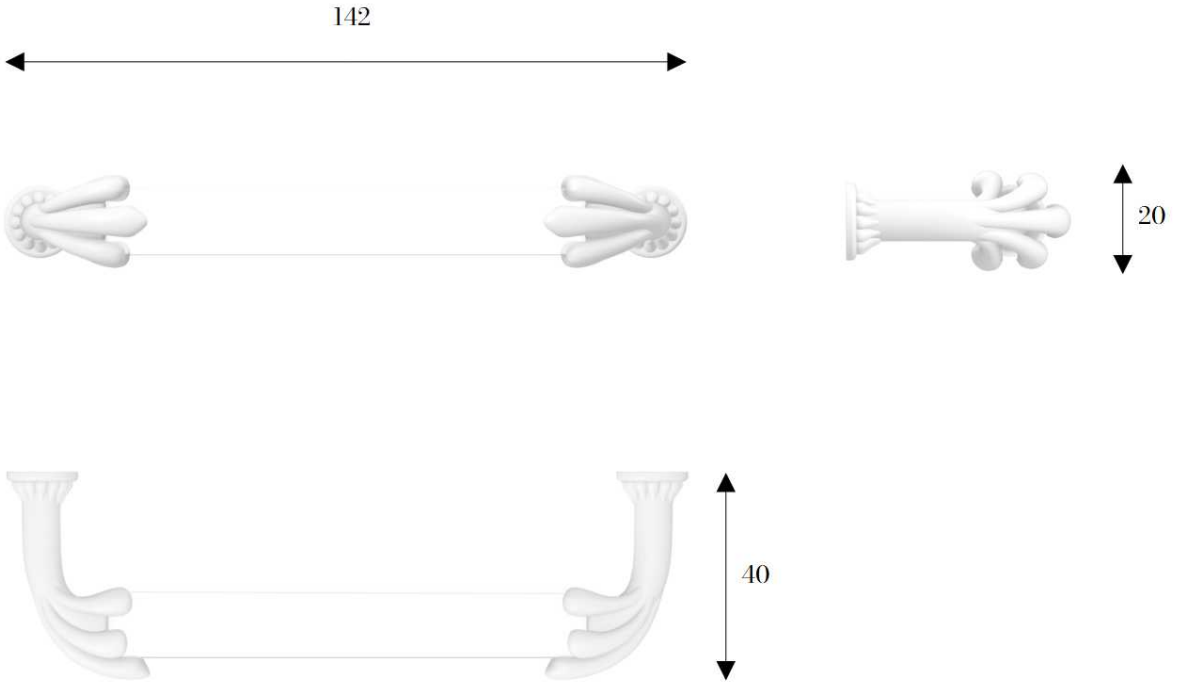

MNMB 004

Dynasty

Available in: Aluminium, Stainless Steel or Titanium
Also available with personalized aluminium insert

Measures:
134 x 35 x 44 mm

Design: M. Borroni

MNMB 004

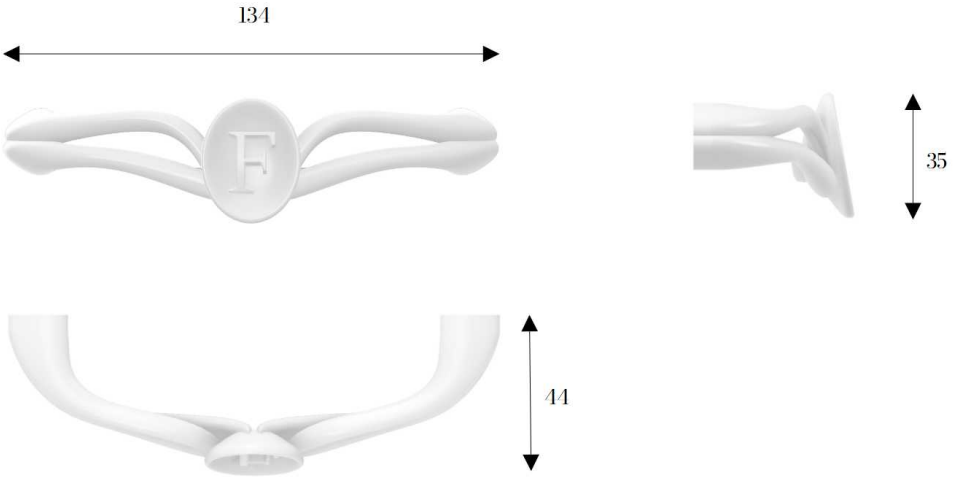

MNMB019

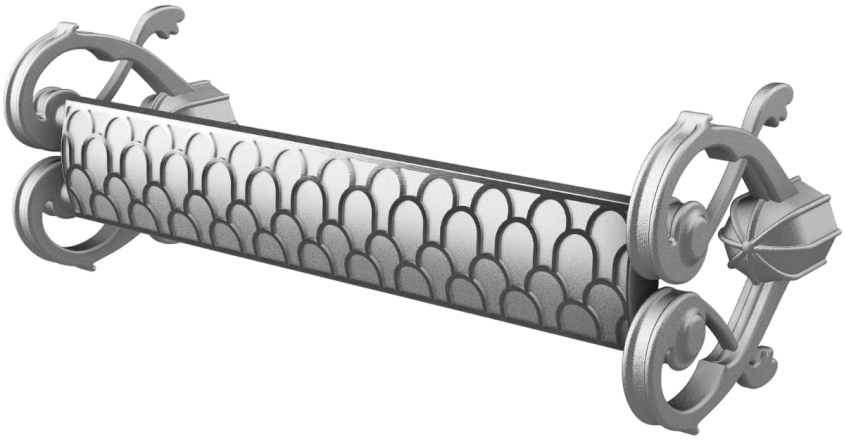

S i g m a G a m m a

Available in: Aluminium or Stainless Steel

Measures:
120 x 40 x 40 mm

Design: M. Borroni

MNMB019

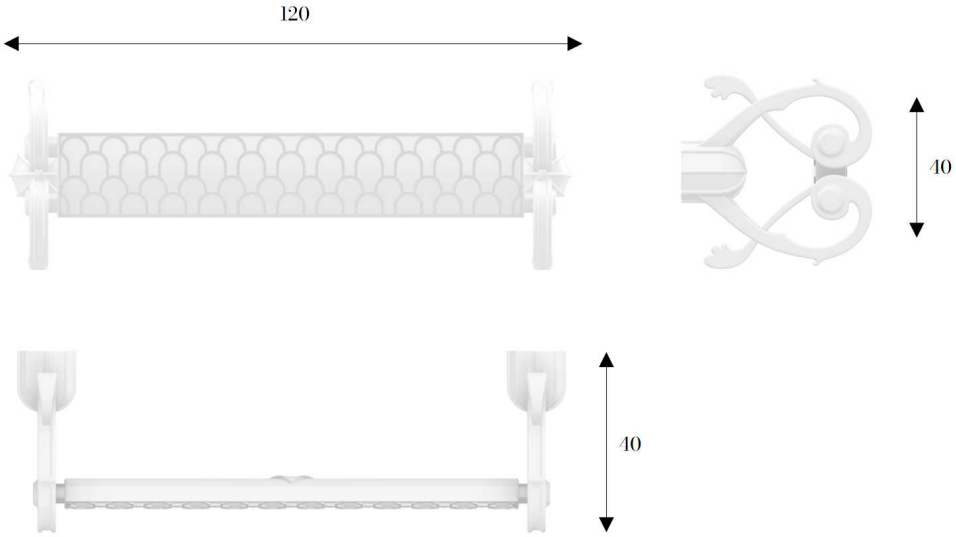

MNMB017

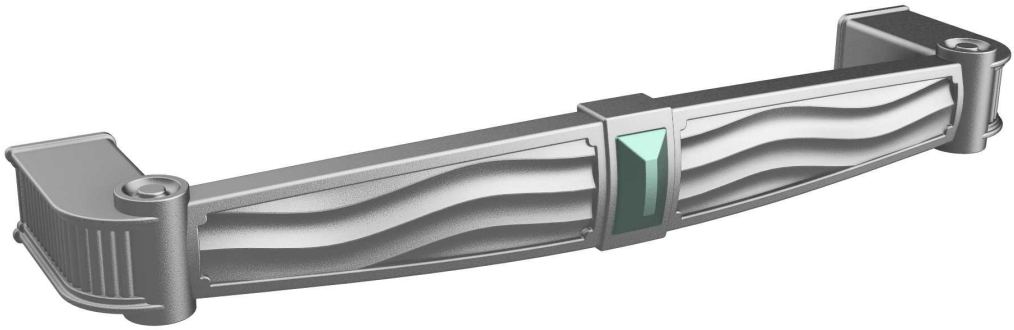

Mediterranea

Available in: Aluminium or Stainless Steel

Central jewel made of pure titanium, in available colour on choice

Measures:

135 x 33 x 17 mm

Design: M. Borroni

MNMB017

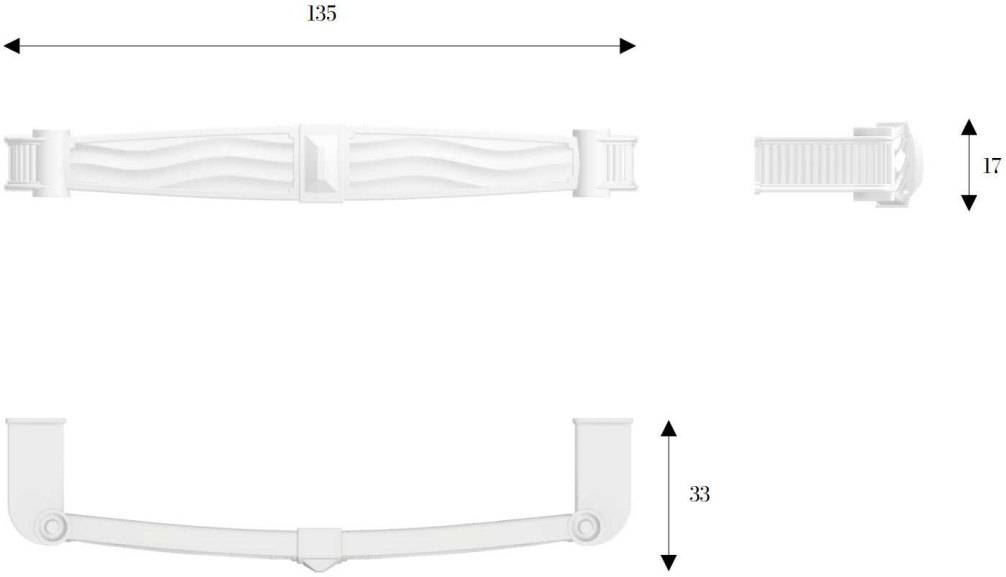

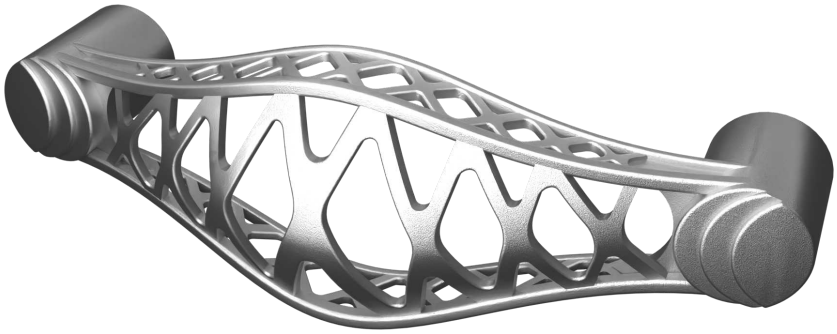

Architecture

Available in: Aluminium or Stainless Steel

Measures:
125 x 37 x 42 mm

Design: M. Borroni

MNMB010

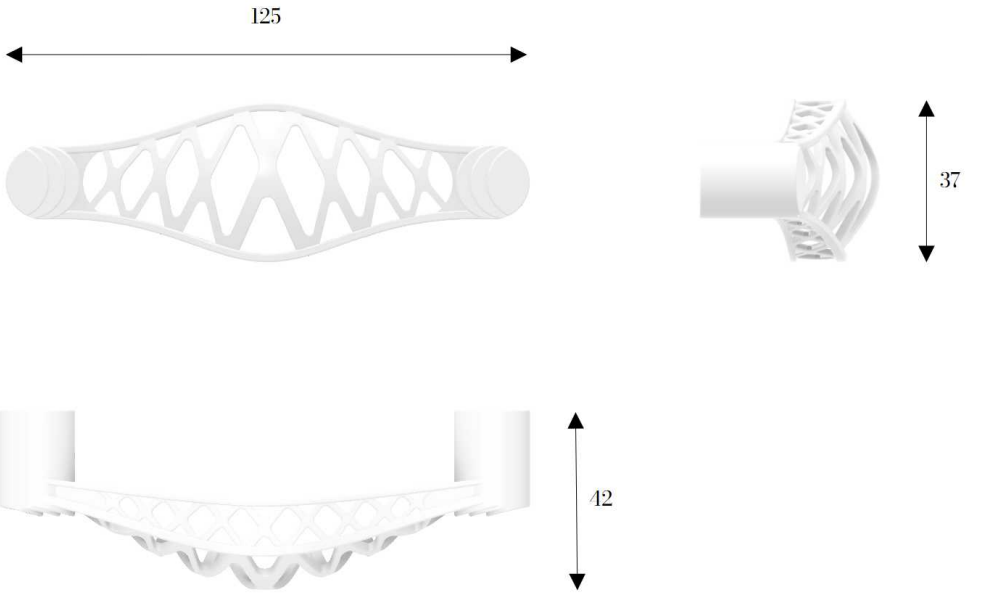

MNMB 009

Anatomy 3

Available in: Aluminium or Stainless Steel

Measures:
130 x 30 x 45 mm

Design: M. Borroni

130

30

45

MNMB012

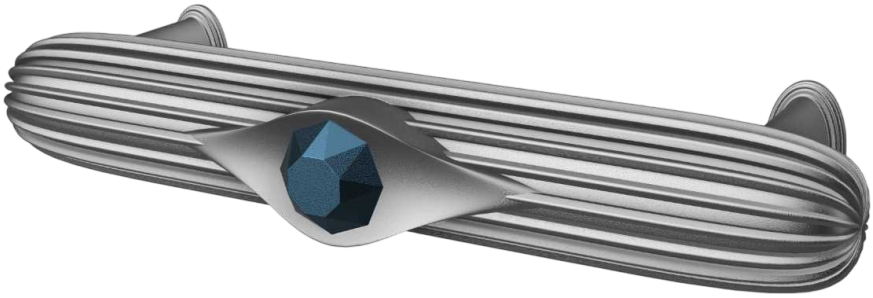

Diamond

Available in: Aluminium or Stainless Steel
Central jewel made of pure titanium, in available colour on choice

Measures:
120 x 20 x 48 mm

Design: M. Borroni

MNMB012

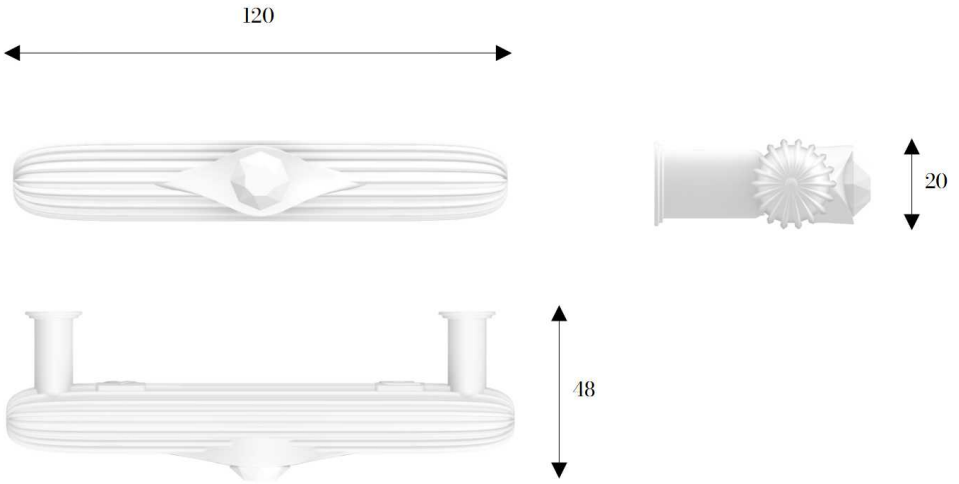

Diamond

Available in: Aluminium or Stainless Steel
Central jewel made of pure titanium, in available colour on choice

Measures:
120 x 20 x 48 mm

Design: M. Borroni