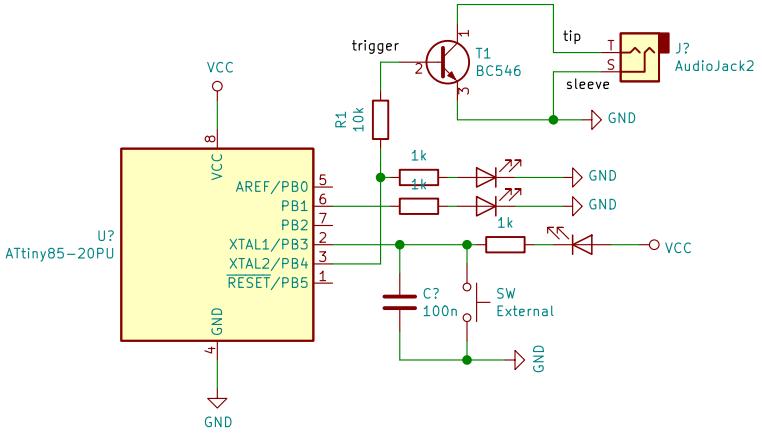

Sheet: /
File: photo-trigger.sch

Title: Photo Trigger

Size: User	Date:	Rev:
KiCad E.D.A. eeschema 5.1.5+dfsg1-2+b1		Id: 1/1