Control

File: Control.kicad_sch

Alimentation

File: Alimentation.kicad_sch

Capteurs

File: Capteurs.kicad_sch

Communication

File: Communication.kicad_sch

ComMoteurs

File: ComMoteurs.kicad_sch

Sheet: /
File: carte_rants_V1.kicad_sch

Title: Carte I0.2

Size: A4	Date: 13/05/16	**Rev:**
KiCad E.D.A. 9.0.6		Id: 1/6

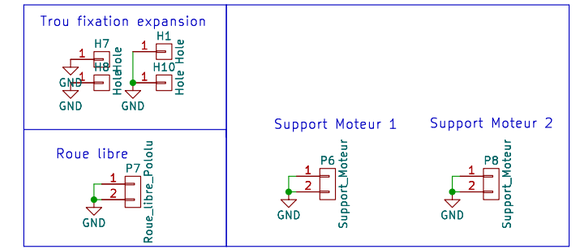

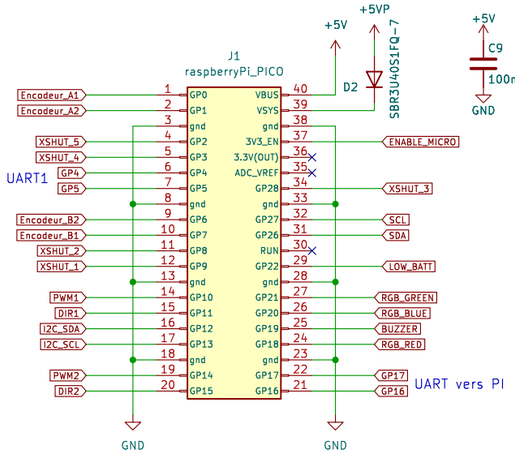

MACE ROBOTICS (www.macerobotics.com)

Licence : CC-BY-SA

Sheet: /Control/
File: Control.kicad_sch

Title: Carte I0.2

Size: A3	Date: 13/05/16	Rev:
KiCad E.D.A. 9.0.6		Id: 2/6

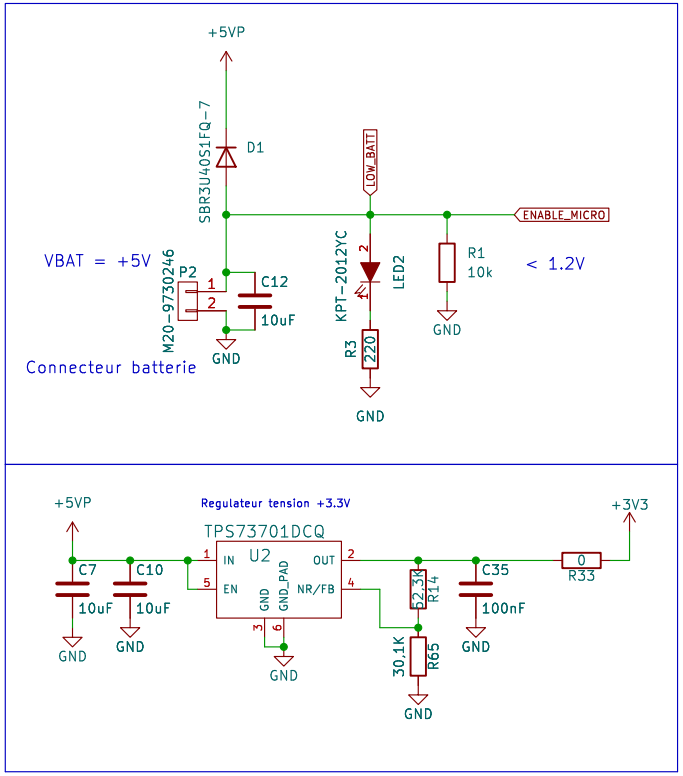

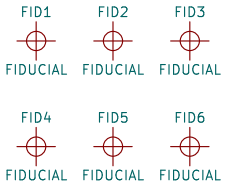

MACE ROBOTICS (www.macerobotics.com)

Licence : CC-BY-SA

Sheet: /Alimentation/
File: Alimentation.kicad_sch

Title: Carte I0.2

Size: A4	Date: 13/05/16	Rev: 0.2
KiCad E.D.A. 9.0.6		Id: 3/6

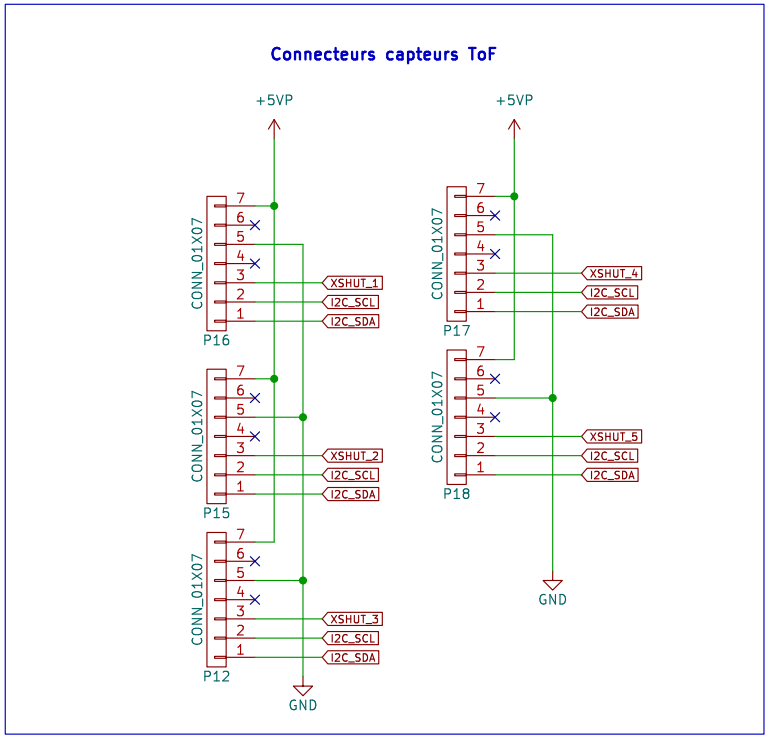

MACE ROBOTICS (www.macerobotics.com)

Licence : CC-BY-SA

Sheet: /Capteurs/
File: Capteurs.kicad_sch

Title: Carte I0.2

Size: A4	Date: 13/05/16	Rev:
KiCad E.D.A. 9.0.6		Id: 4/6

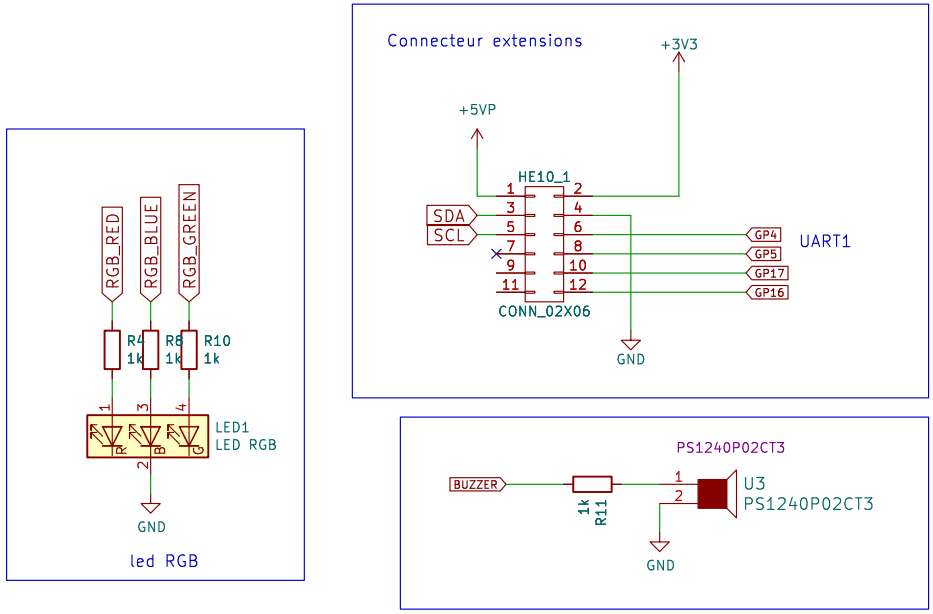

MACE ROBOTICS (www.macerobotics.com)

Licence : CC-BY-SA

Sheet: /Communication/
File: Communication.kicad_sch

Title: Carte I0.2

Size: A4	Date: 13/05/16	Rev:
KiCad E.D.A. 9.0.6		Id: 5/6

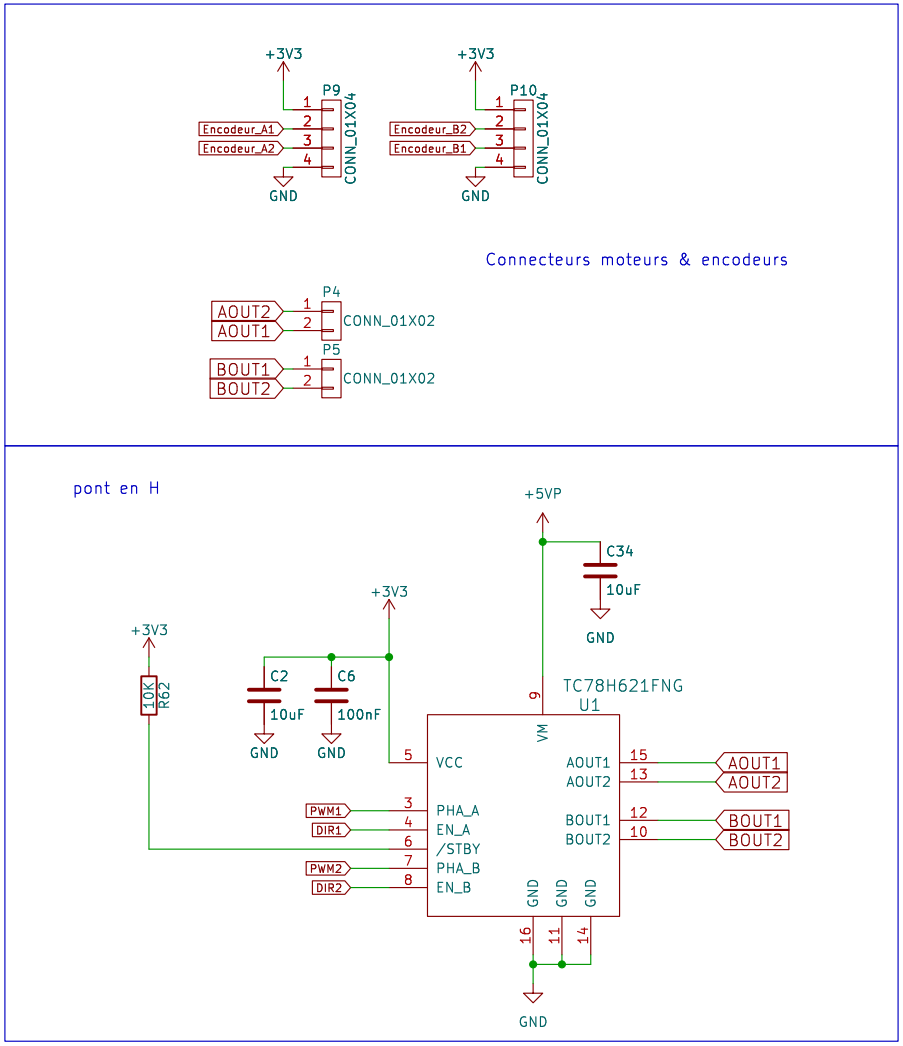

MACE ROBOTICS (www.macerobotics.com)

Licence : CC-BY-SA

Sheet: /ComMoteurs/
File: ComMoteurs.kicad_sch

Title: Carte I0.2

Size: A4	Date: 13/05/16	Rev:
KiCad E.D.A. 9.0.6		Id: 6/6