RevNo	Revision note	Date	Signature	Checked

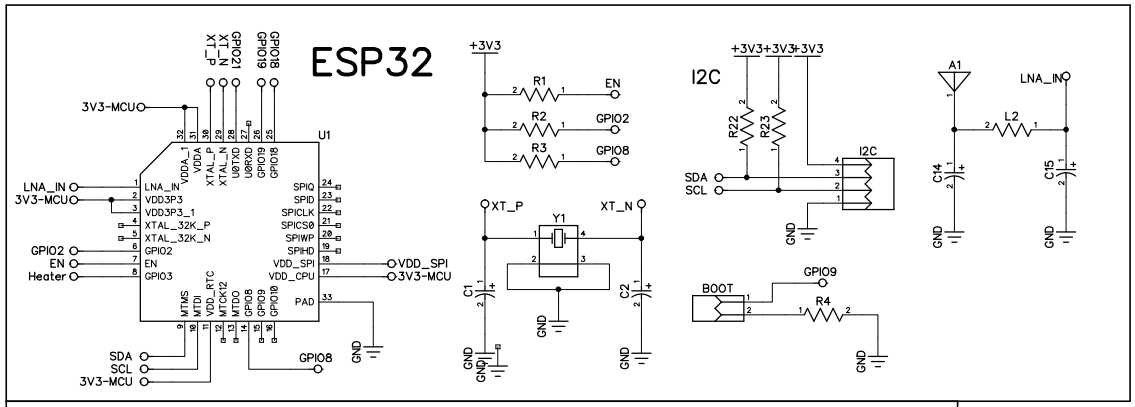

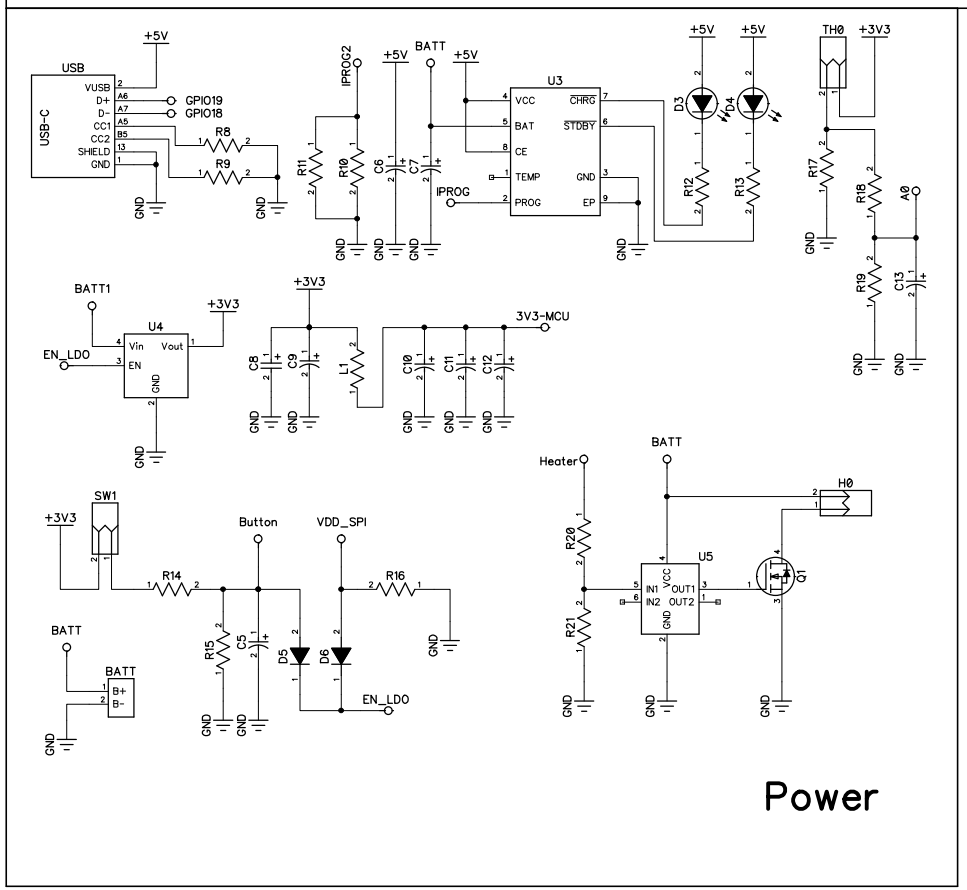

Itemref	Quantity	Habitat Control V3		Article No./Reference	
Designed by		Checked by	Approved by - date - 00/00/00	File name	Date 20/12/2023	Scale 1:1
					Edition 0	Sheet 1/1