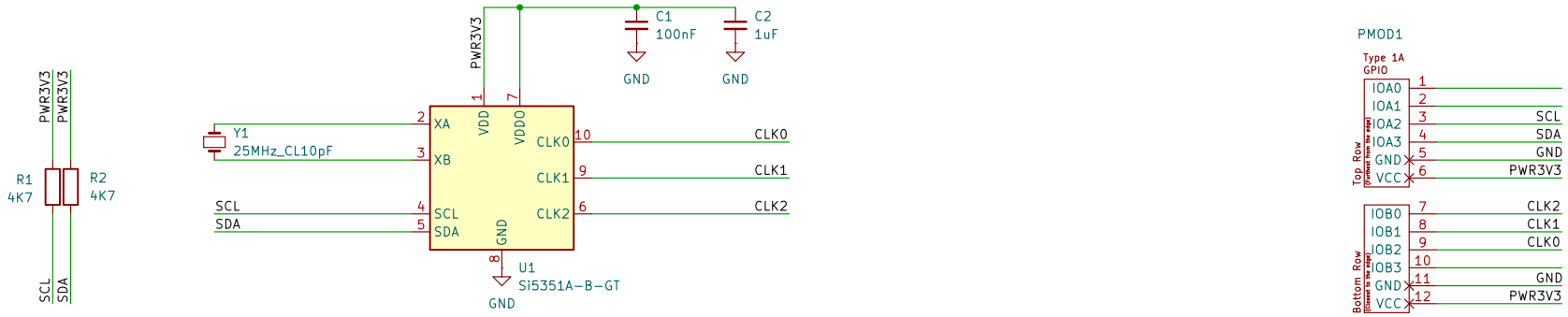

CLKGEN Pmod Compatible Module

Copyright © 2024 Lone Dynamics Corporation

Sheet: /
File: pmod_clkgen.kicad_sch

Title: CLKGEN

Size: A4	Date: 2024-05-28	Rev: V0
KiCad E.D.A. 8.0.3		Id: 1/1