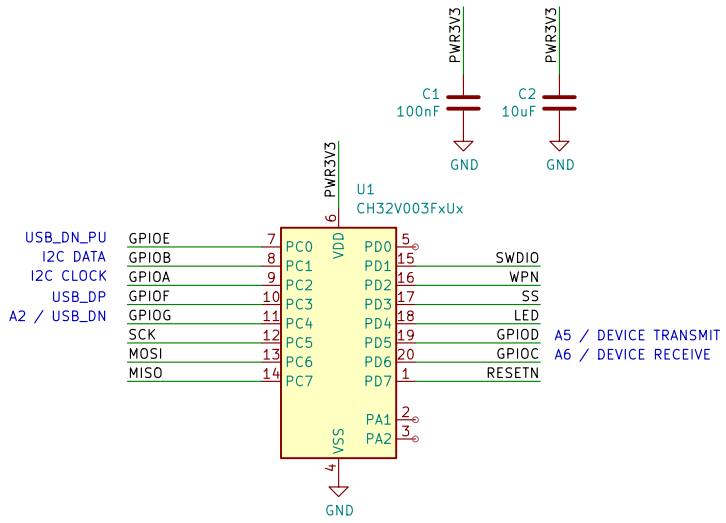

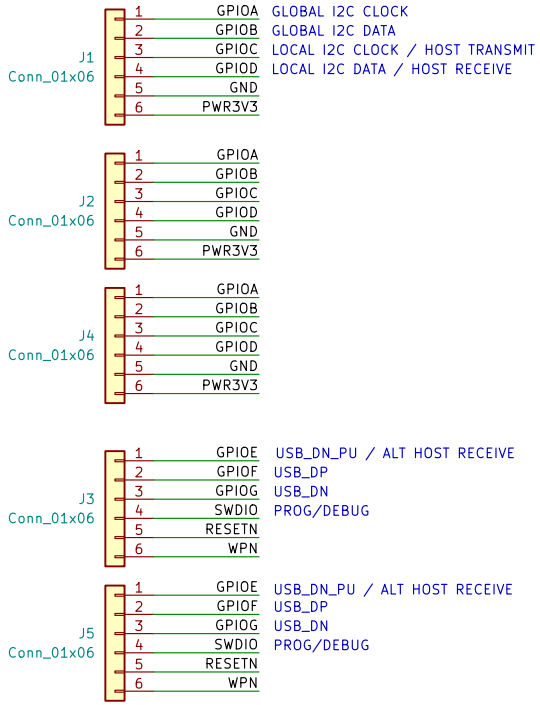

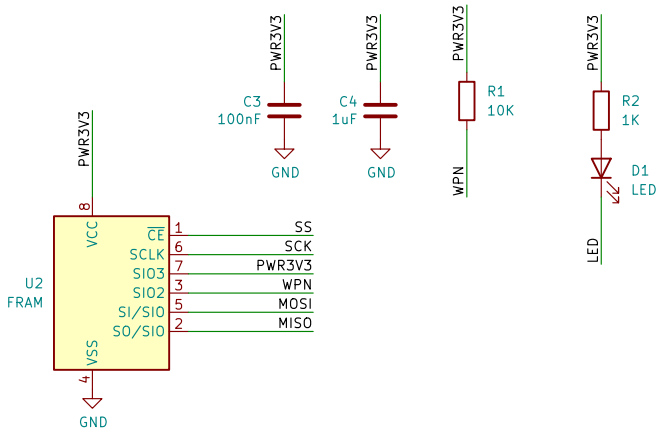

Zwölf LS10

Copyright © 2024 Lone Dynamics Corporation

Sheet: /
File: ls1.kicad_sch

Title: LS10

Size: A4	Date: 2024-11-10	Rev: A
KiCad E.D.A. 8.0.8		Id: 1/1