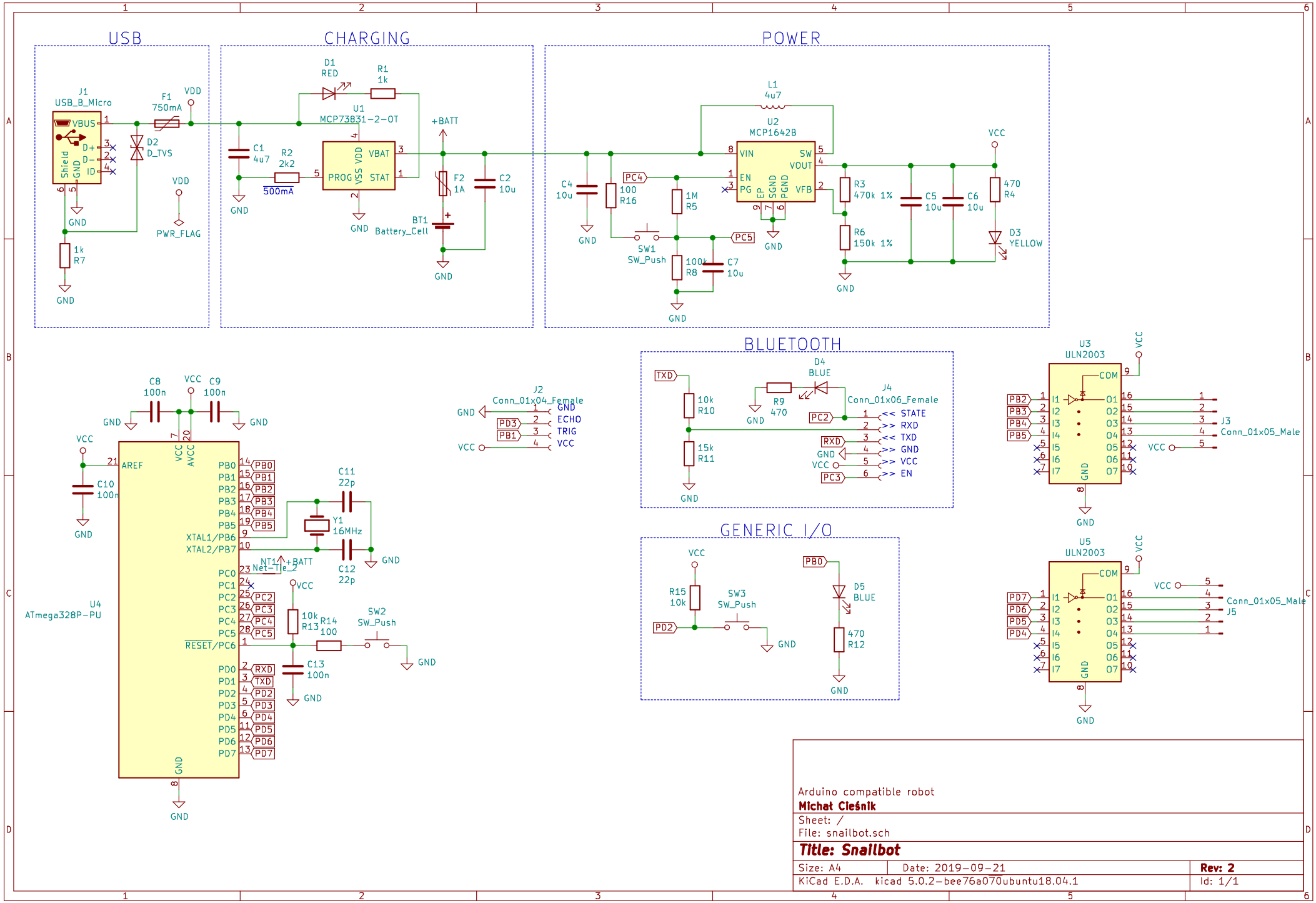
USB
J1
USB_B_Micro
VBUS
D+
D-
ID
Shield
GND
F1
750mA
VDD
D2
D_TVS
PWR_FLAG
1k
R7
CHARGING
D1
RED
R1
1k
U1
MCP73831-2-OT
C1
4u7
R2
2k2
500mA
PROG
VDD
VSS
VBAT
STAT
+BATT
F2
1A
C2
10u
BT1
Battery_Cell
POWER
L1
4u7
U2
MCP1642B
VIN
EN
PG
SW
VOUT
VFB
EP
SGND
PGND
C4
10u
100
R16
PC4
1M
R5
SW1
SW_Push
100k
R8
C7
10u
PC5
R3
470k 1%
R6
150k 1%
C5
10u
C6
10u
VCC
470
R4
D3
YELLOW
BLUETOOTH
TXD
10k
R10
15k
R11
D4
BLUE
R9
470
J4
Conn_01x06_Female
PC2
RXD
GND
VCC
PC3
<< STATE
>> RXD
<< TXD
>> GND
>> VCC
>> EN
GENERIC I/O
R15
10k
SW3
SW_Push
PD2
PB0
D5
BLUE
470
R12
U3
ULN2003
COM
PB2
PB3
PB4
PB5
J3
Conn_01x05_Male
U5
ULN2003
PD7
PD6
PD5
PD4
Conn_01x05_Male
J5
C8
100n
C9
100n
C10
100n
AREF
AVCC
U4
ATmega328P-PU
PB0
PB1
PB2
PB3
PB4
PB5
XTAL1/PB6
XTAL2/PB7
PC0
PC1
PC2
PC3
PC4
PC5
RESET/PC6
PD0
PD1
PD2
PD3
PD4
PD5
PD6
PD7
C11
22p
Y1
16MHz
C12
22p
NT1
Net-Tie_2
10k
R13
R14
100
SW2
SW_Push
C13
100n
J2
Conn_01x04_Female
ECHO
TRIG
Arduino compatible robot
Michał Cieśnik
Sheet: /
File: snailbot.sch
Title: Snailbot
Size: A4
Date: 2019-09-21
Rev: 2
KiCad E.D.A. kicad 5.0.2-bee76a070ubuntu18.04.1
Id: 1/1