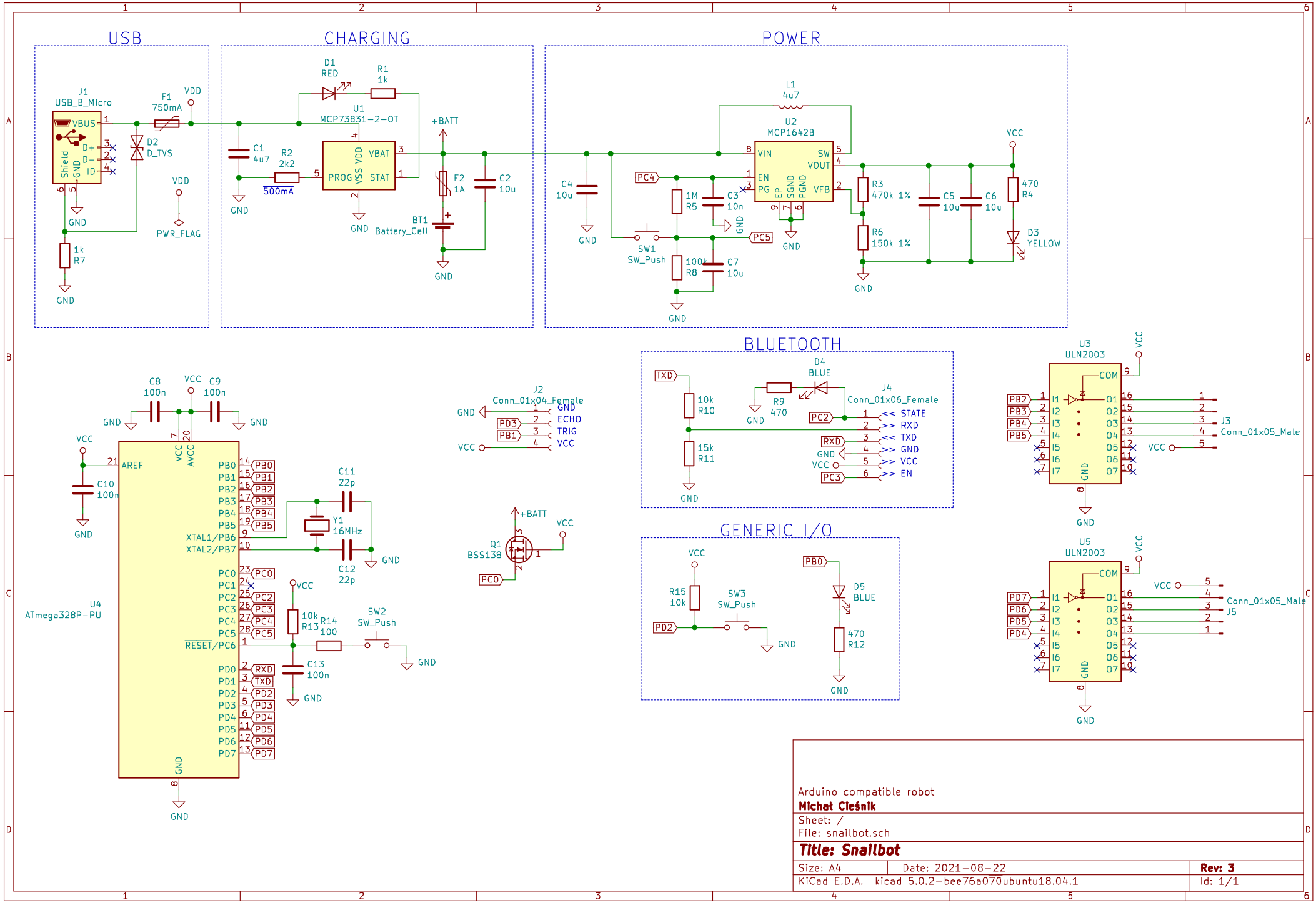

Arduino compatible robot

Michał Cieśnik

Sheet: /

File: snailbot.sch

Title: Snailbot

Size: A4	Date: 2021-08-22	**Rev: 3**
KiCad E.D.A. kicad 5.0.2-bee76a070ubuntu18.04.1		Id: 1/1