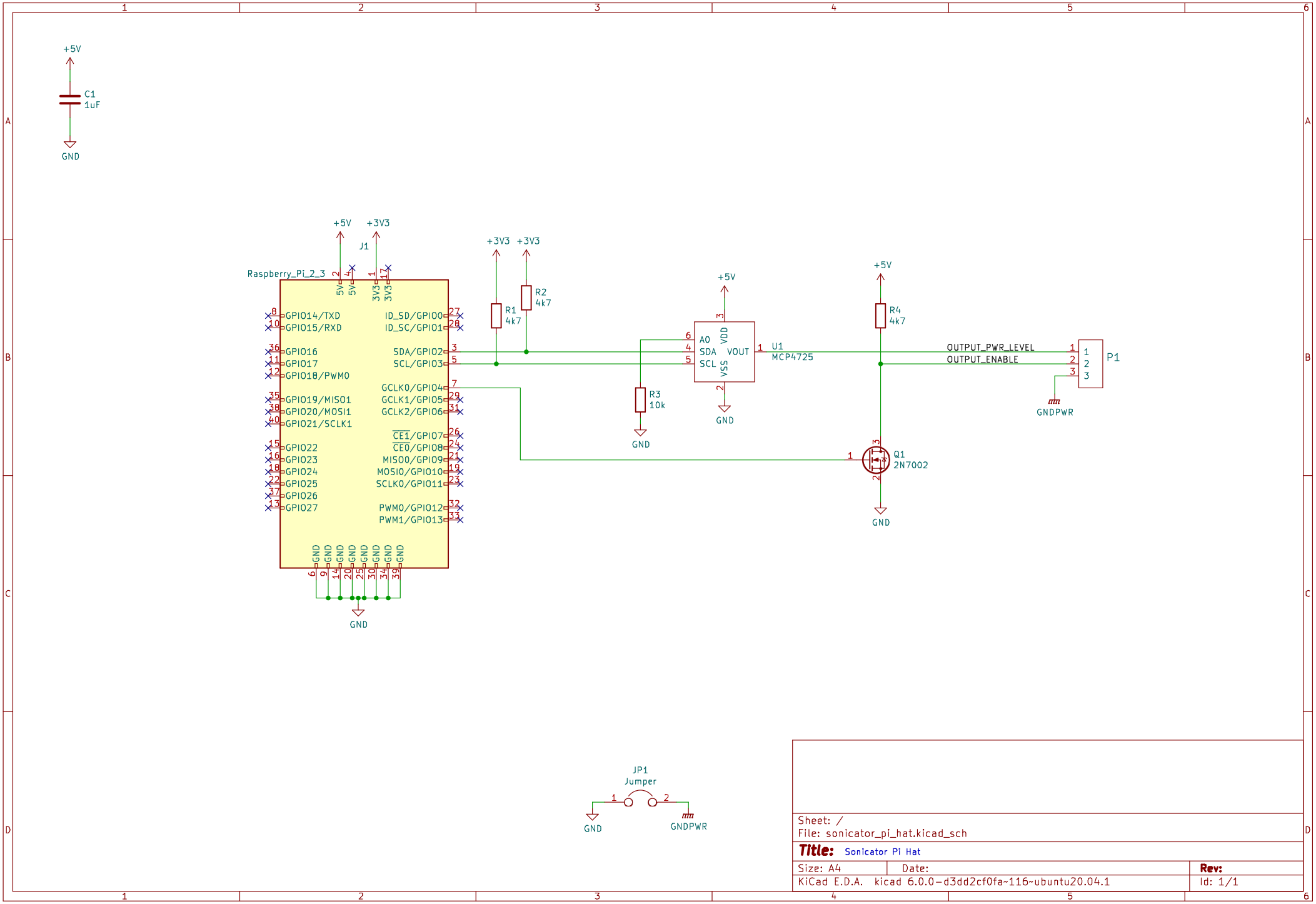

Sheet: /
File: sonicator_pi_hat.kicad_sch

Title: Sonicator Pi Hat

Size: A4	Date:	Rev:
KiCad E.D.A. kicad 6.0.0-d3dd2cf0fa~116~ubuntu20.04.1		Id: 1/1