BLM GROUP

PRESS BRAKE ELECTRIC DIAGRAM

Customer:	BLM Group
Commission:	04-2021 / PE0122
Project:	CN ESA - 420-200 TON
Notes:	Clamping - Crowning - Double pedalboard - Follower
Electric Panel Maker:	UNIELECTRIC S.R.L.

Nominal Voltage / Colour:	380 VAC / Black		
Aux Voltage / Colour:	24 VDC / Blu - 220 VAC / Grey		
Frequency:	50 - 60 Hz		
Nominal Current:	63 A		
Total Power (KW):	25 KW	Short Circuit Interruption Rate:	10 KA
Compliant with Regulations:	CEI 17-113 / CEI 17-114		

THIS DIAGRAM IS OUR EXCLUSIVE PROPERTY AND IT CAN'T BE SHOWN OR COPIED TO THIRD PARTIES NEITHER IN ORIGINAL OR IN COPY WITHOUT OUR AUTHORIZATION (art: 1152-1158-1161 c.c.)

LIST OF CONTENTS

- POWER: Pag. 1 - 2 - 2A - 3
- 24V POWER SUPPLY: Pag. 4
- Y AXIS POWER SUPPLY: Pag. 4A - 4B
- LUBRIFICATION UNIT AND LIGHTING: Pag. 5
- BACK GAUGE: Pag. 6 - 6A
- CROWNING AND CLAMPING: Pag 7 - 7A
- DRIVES Y AXIS: Pag. 8 - 8A
- IN / OUT RACK ESA: Pag. 9 - 10 - 11 - 12
- IN / OUT PCSS LAZERSAFE: Pag. 13 - 14 - 15 - 16
- COMPONENTS CONNECTION: Pag. 17
- WIRING PLUGS: Pag 17A - 17B
- WELDING SCHEMATICS: Pag. 18 - 19 - 20 - 21 - 22
- FRONT PANEL DRAWING: Pag. 23
- TERMINAL BLOCK: Pag. 24
- COMPONENTS: Pag. 25 - 26

THIS DIAGRAM IS OUR EXCLUSIVE PROPERTY AND IT CAN'T BE SHOWN OR COPIED TO THIRD PARTIES NEITHER IN ORIGINAL OR IN COPY WITHOUT OUR AUTHORIZATION (art: 1152-1158-1161 c.c.)

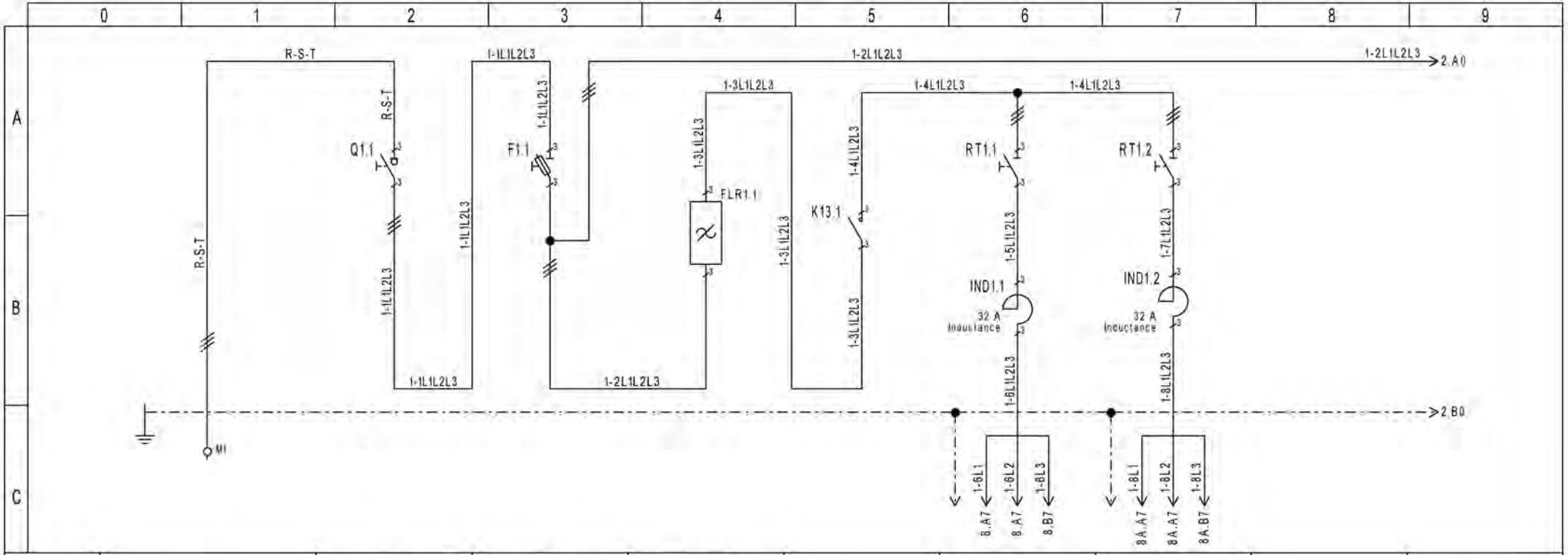

Users	Name			Main Switch		Main Fuse Holder		Drives Filter Axis Y1 - Y2				Drive Y1 Switch		Drive Y2 Switch					
	Type	Tot. Power KW																	
	Power KW	In A																	
		Cos Φ																	
Switch or Isolator	Builder			Lovato - GA063A		Lovato - FB03A3P						Lovato - SM1R2500		Lovato SM1R2500					
	Type			Disconnector		Fuse Holder		Filter				Motor Protector		Motor Protector					
	N. Pole	In A		3	63	3		3	50			3	20 - 25 A	3	20 - 25 A				
	Ith A																		
	Im (o curve) A	Pdi KA																	
Differential	Type	Class																	
	Idn	Tdn																	
Fuse	Type					Delayed													
	Dimension mm	In A				22 x 58	50 A												
Contactor	Type																		
	In A	Pn KW																	
Thermal Relay	Type																		
	Calibration A																		
Power Line	Cable Type																		
	Formation																		
	Length m																		
	Iz A																		
	C.d.T. a In %	C.d.T. a Ib %																	
	Zk mΩ	Zs mΩ																	
	Ik KA	Ik Ground KA																	
	Terminal Block																		

BLM GROUP

Cartier Drive 46850
Novi, MI 48377
Tel. +1 (248) 560 0080
Fax +1 (248) 560 0083
E-mail: service@blmgroupusa.com
Site: www.blmgroup.com

Project: CN ESA - 420-200 TON

Commission: 04-2021 / PE0122 | Date: 20/04/2021 | Customer: BLM Group

Note: Wila Clamping - Wila Crowning - Double Pedalboard - LED Strip - Sheet Follower

THIS DIAGRAM IS OUR EXCLUSIVE PROPERTY AND IT CAN'T BE SHOWN OR COPIED TO THIRD PARTIES NEITHER IN ORIGINAL OR IN COPY WITHOUT OUR AUTHORIZATION (art: 1152-1158-1161 c.c.)

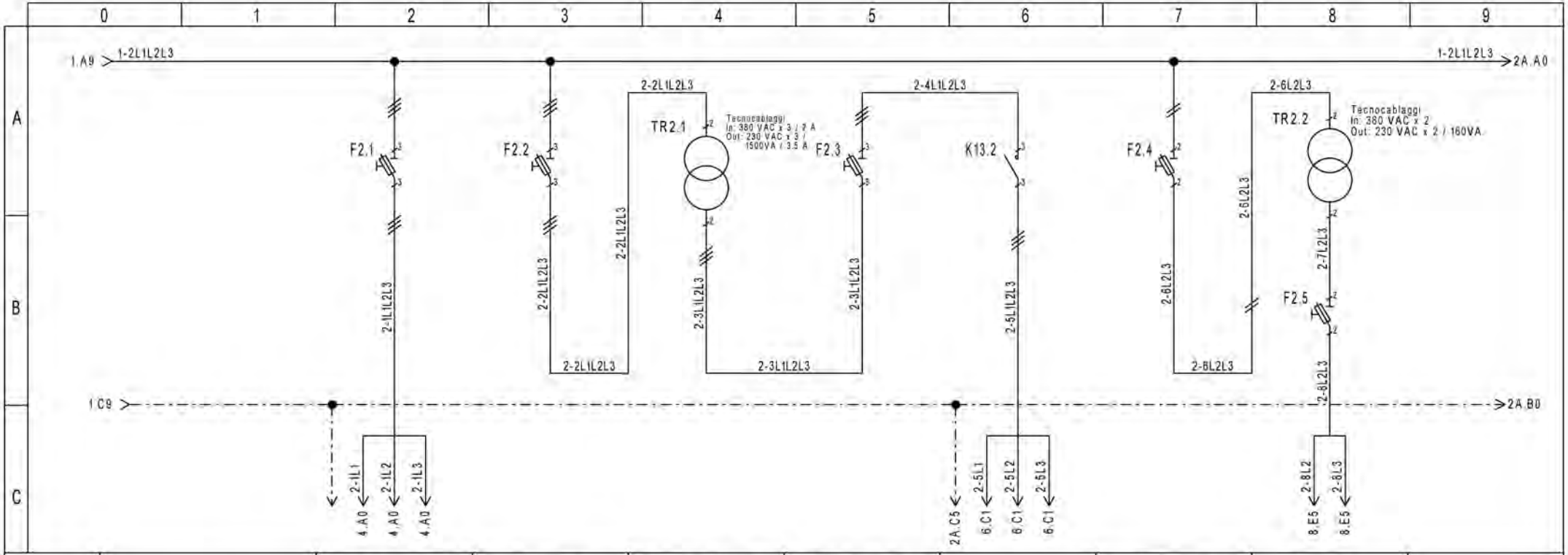

Users	Name		Fuse Holder 24VDC Power Supply		Fuse Holder Back Gauge Transformer		Back Gauge Transformer 380VAC - 220 VAC		Fuse Holder Back Gauge Power Supply				Fuse Holder Brakes Transformer		Fuse Holder Brakes Power Source			
	Type	Tot. Power KW																
	Power KW	Ih A																
		Cosφ																
Switch or Isolator	Builder		Lovato - FB01F3P		Lovato - FB01F3P				Lovato - FB01F3P				Lovato - FB01F2P		Lovato - FB01F2P			
	Type		Fuse Holder		Fuse Holder				Fuse Holder				Fuse Holder		Fuse Holder			
	N. Pole	In A	3		3				3				2		2			
	Ith	A																
	Im (o curve) A	Pdi KA																
Differential	Type	Class																
	Idn	Tdn																
Fuse	Type		Delayed		Delayed				Delayed				Delayed		Delayed			
	Dimension mm	In A	10.3 x 38	4 A	10.3 x 38	4 A			10.3 x 38	6 A			10.3 x 38	2 A	10.3 x 38	2 A		
Contactor	Type																	
	In A	Pn KW																
Thermal Relay	Type																	
	Calibration	A																
Power Line	Cable Type																	
	Formation																	
	Length	m																
	Iz	A																
	C.d.T. a In %	C.d.T. a Ib %																
	Zk mΩ	Zs mΩ																
	Ik KA	Ik Ground KA																
	Terminal Block																	

BLM GROUP
Cartier Drive 46850
Novi, MI 48377
Tel. +1 (248) 560 0080
Fax +1 (248) 560 0083
E-mail: service@blmgroupusa.com
Site: www.blmgroup.com

Project: CN ESA - 420-200 TON

Commission: 04-2021 / PE0122 | Date: 20/04/2021 | Customer: BLM Group

Note: Wila Clamping - Wila Crowning - Double Pedalboard - LED Strip - Sheet Follower

THIS DIAGRAM IS OUR EXCLUSIVE PROPERTY AND IT CAN'T BE SHOWN OR COPIED TO THIRD PARTIES NEITHER IN ORIGINAL OR IN COPY WITHOUT OUR AUTHORIZATION (art: 1152-1158-1161 c.c.)

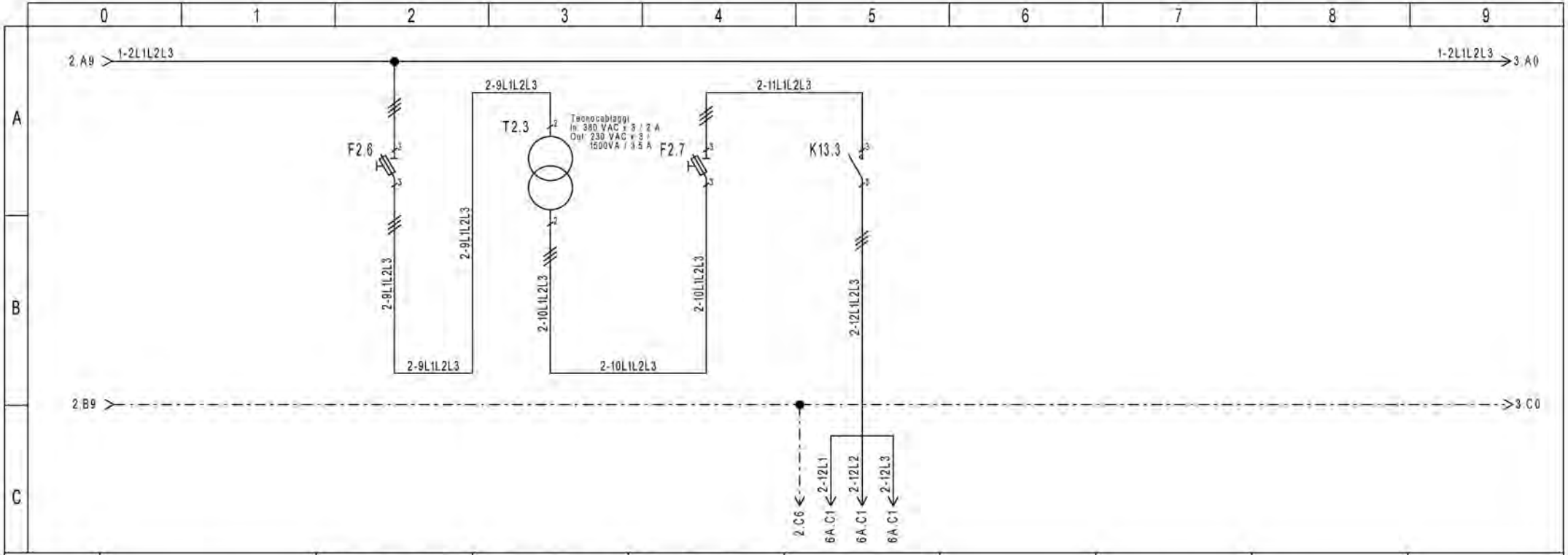

Users	Name			Fuse Holder Sheet Follower Transformer		Sheet Follower Transformer		Fuse Holder Sheet Follower Power Supply										
	Type	Tot. Power KW																
	Power KW	Ib A																
		Cos φ																
Switch or Isolator	Builder			Lovato - FB01F3P				Lovato - FB01F3P										
	Type			Fuse Holder				Fuse Holder										
	N. Pole	In A		3				3										
	Ith A																	
	Im (o curve) A	Pdi KA																
Differential	Type	Class																
	Idn	Tdn																
Fuse	Type			Delayed				Delayed										
	Dimension mm	In A		10.3 x 38	4 A			10.3 x 38	6 A									
Contactor	Type																	
	In A	Pn KW																
Thermal Relay	Type																	
	Calibration A																	
Power Line	Cable Type																	
	Formation																	
	Length m																	
	Iz A																	
	C.d.T. a In %	C.d.T. a Ib %																
	Zk mΩ	Zs mΩ																
	Ik KA	Ik Ground KA																
	Terminal Block																	

BLM GROUP

Cartier Drive 46850
Novi, MI 48377
Tel. +1 (248) 560 0080
Fax +1 (248) 560 0083
E-mail: service@blmgroupusa.com
Site: www.blmgroup.com

Project: CN ESA - 420-200 TON

Commission: 04-2021 / PE0122 | Date: 20/04/2021 | Customer: BLM Group

Note: Wila Clamping - Wila Crowning - Double Pedalboard - LED Strip - Sheet Follower

THIS DIAGRAM IS OUR EXCLUSIVE PROPERTY AND IT CAN'T BE SHOWN OR COPIED TO THIRD PARTIES NEITHER IN ORIGINAL OR IN COPY WITHOUT OUR AUTHORIZATION (art: 1152-1158-1161 c.c.)

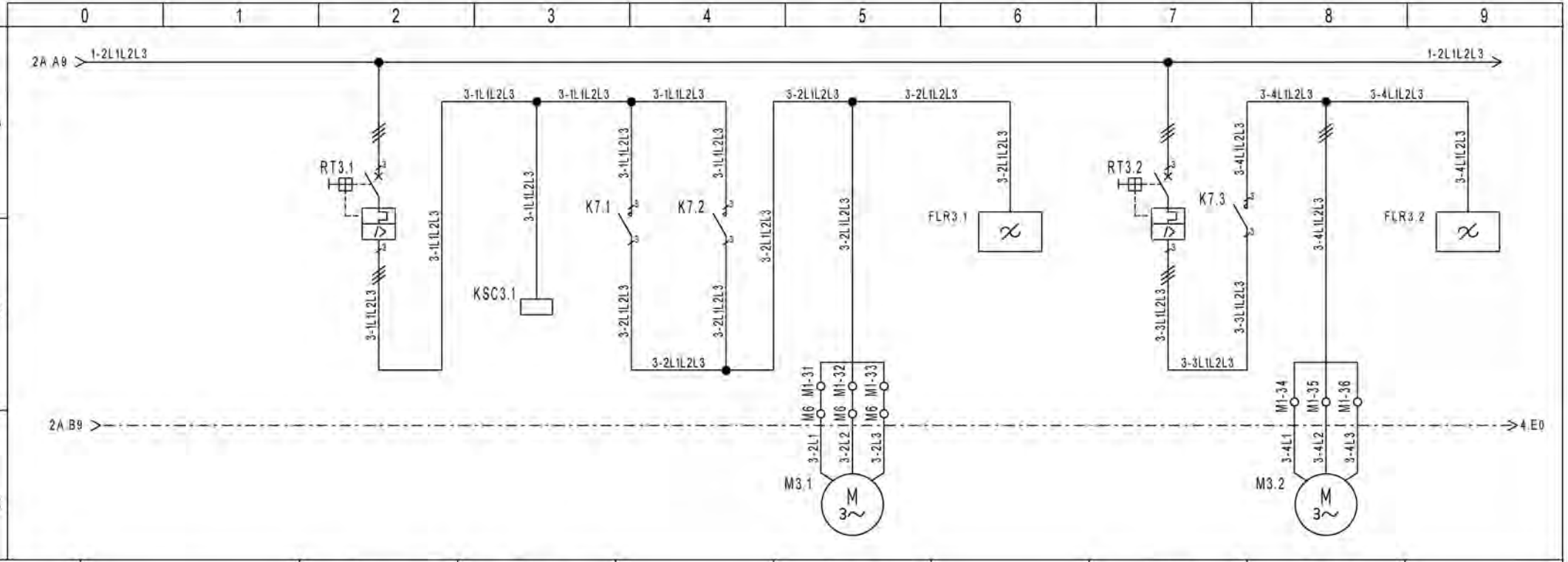

Users	Name			Crowning Motor Protector		Phases Sequence				Crowning Motor				Clamping Motor Protector		Clamping Motor			
	Type	Tot. Power	KW																
	Power KW	Ih	A																
		Cosφ																	
Switch or Isolator	Builder			Lovato - SM1P0160		Lovato - PMV10A440								Lovato - SM1P0160					
	Type			Motor Protector		Voltage Monitoring								Motor Protector					
	N. Pole	In	A	3	1 - 1.6 A									3	1 - 1.6 A				
	Ith		A																
	Im (o curve) A	Pdi	KA																
Differential	Type	Class																	
	Idn	Tdn																	
Fuse	Type																		
	Dimension mm	In	A																
Contactor	Type																		
	In A	Pn	KW																
Thermal Relay	Type																		
	Calibration		A																
Power Line	Cable Type																		
	Formation																		
	Length		m																
	Iz		A																
	C.d.T. a In %	C.d.T. a Ib	%																
	Zk mΩ	Zs	mΩ																
	Ik KA	Ik Ground	KA																
	Terminal Block																		

BLM GROUP

Cartier Drive 46850
Novi, MI 48377
Tel. +1 (248) 560 0080
Fax +1 (248) 560 0083
E-mail: service@blmgroupusa.com
Site: www.blmgroup.com

Project: CN ESA - 420-200 TON

Commission: 04-2021 / PE0122 | Date: 20/04/2021 | Customer: BLM Group

Note: Wila Clamping - Wila Crowning - Double Pedalboard - LED Strip - Sheet Follower

THIS DIAGRAM IS OUR EXCLUSIVE PROPERTY AND IT CAN'T BE SHOWN OR COPIED TO THIRD PARTIES NEITHER IN ORIGINAL OR IN COPY WITHOUT OUR AUTHORIZATION (art: 1152-1158-1161 c.c.)

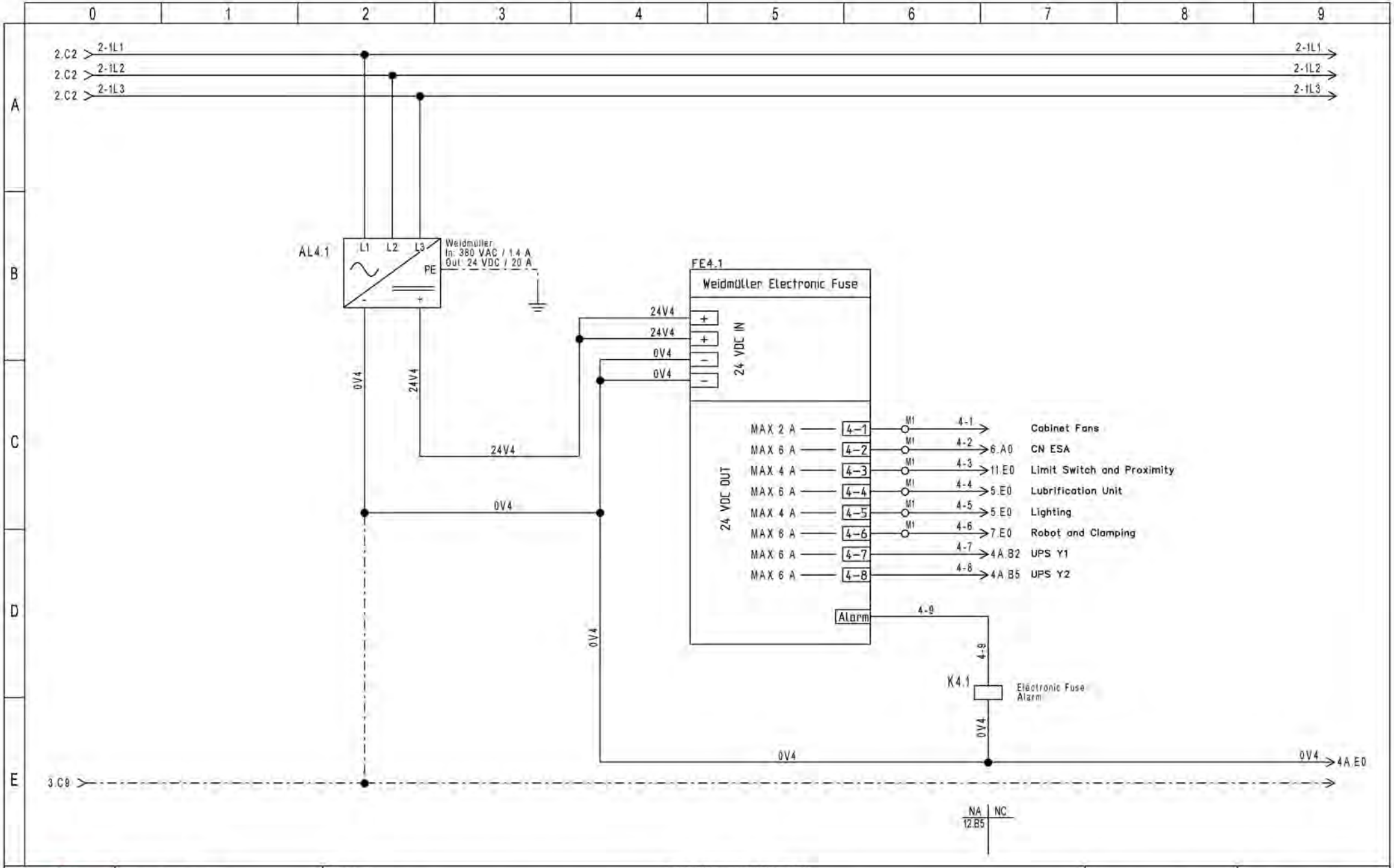

BLM GROUP
Cartier Drive 46850
Novi, MI 48377
Tel. +1 (248) 560 0080
Fax +1 (248) 560 0083
E-mail: service@blmgroupusa.com
Site: www.blmgroup.com

Project:	CN ESA - 420-200 TON		
Commission: 04-2021 / PE0122	Date: 20/04/2021	Customer:	BLM Group
Note: Wila Clamping - Wila Crowning - Double Pedalboard - LED Strip - Sheet Follower			

THIS DIAGRAM IS OUR EXCLUSIVE PROPERTY AND IT CAN'T BE SHOWN OR COPIED TO THIRD PARTIES NEITHER IN ORIGINAL OR IN COPY WITHOUT OUR AUTHORIZATION (art: 1152-1158-1161 c.c.)

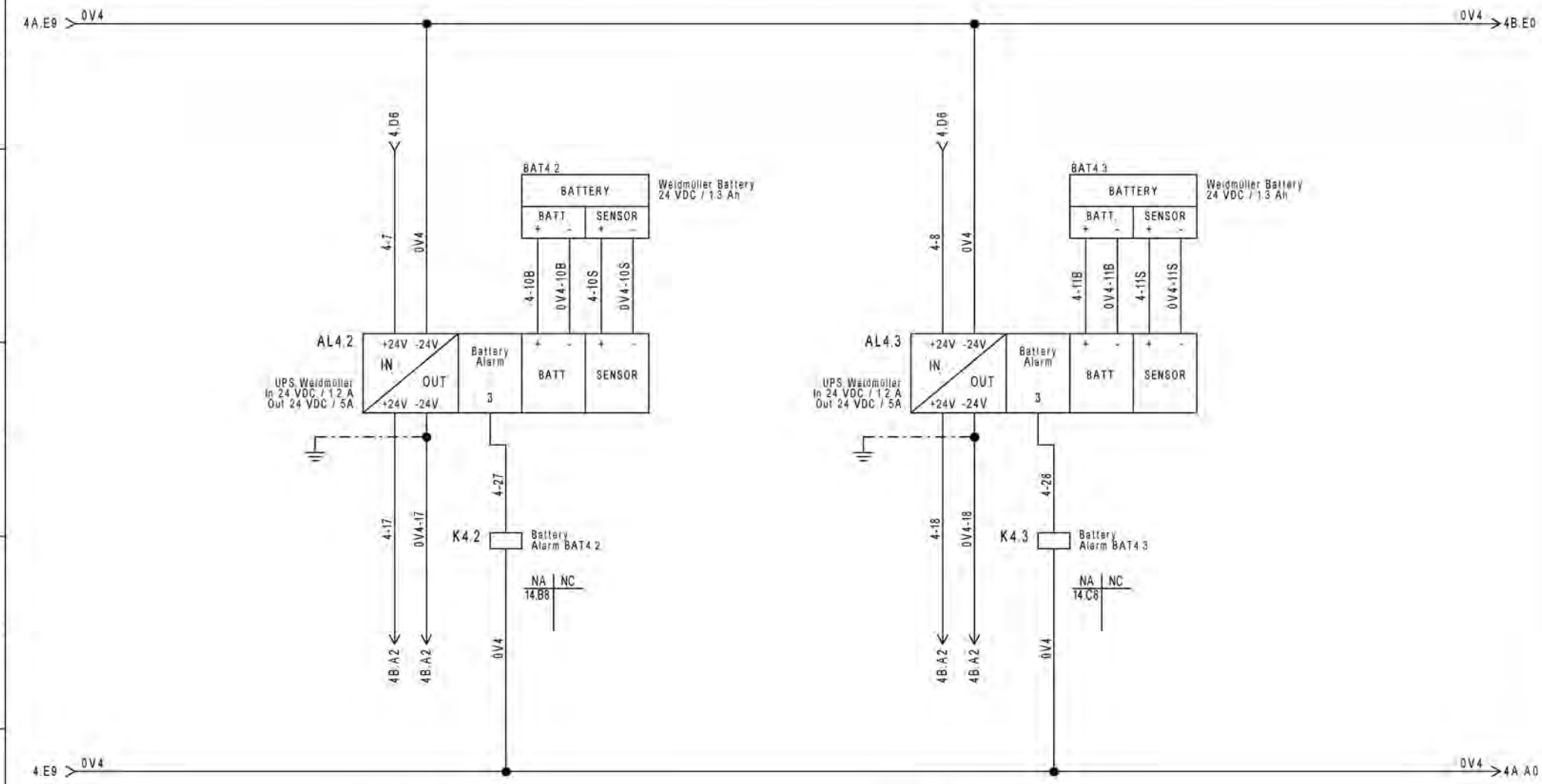

24VDC UPS Y1 Drive

24VDC UPS Y2 Drive

BLM GROUP

Cartier Drive 46850
Novi, MI 48377
Tel. +1 (248) 560 0080
Fax +1 (248) 560 0083
E-mail: service@blmgroupusa.com
Site: www.blmgroup.com

Project:	CN ESA - 420-200 TON		
Commission: 04-2021 / PE0122	Date: 20/04/2021	Customer:	BLM Group
Note: Wila Clamping - Wila Crowning - Double Pedalboard - LED Strip - Sheet Follower			

THIS DIAGRAM IS OUR EXCLUSIVE PROPERTY AND IT CAN'T BE SHOWN OR COPIED TO THIRD PARTIES NEITHER IN ORIGINAL OR IN COPY WITHOUT OUR AUTHORIZATION (art: 1152-1158-1161 c.c.)

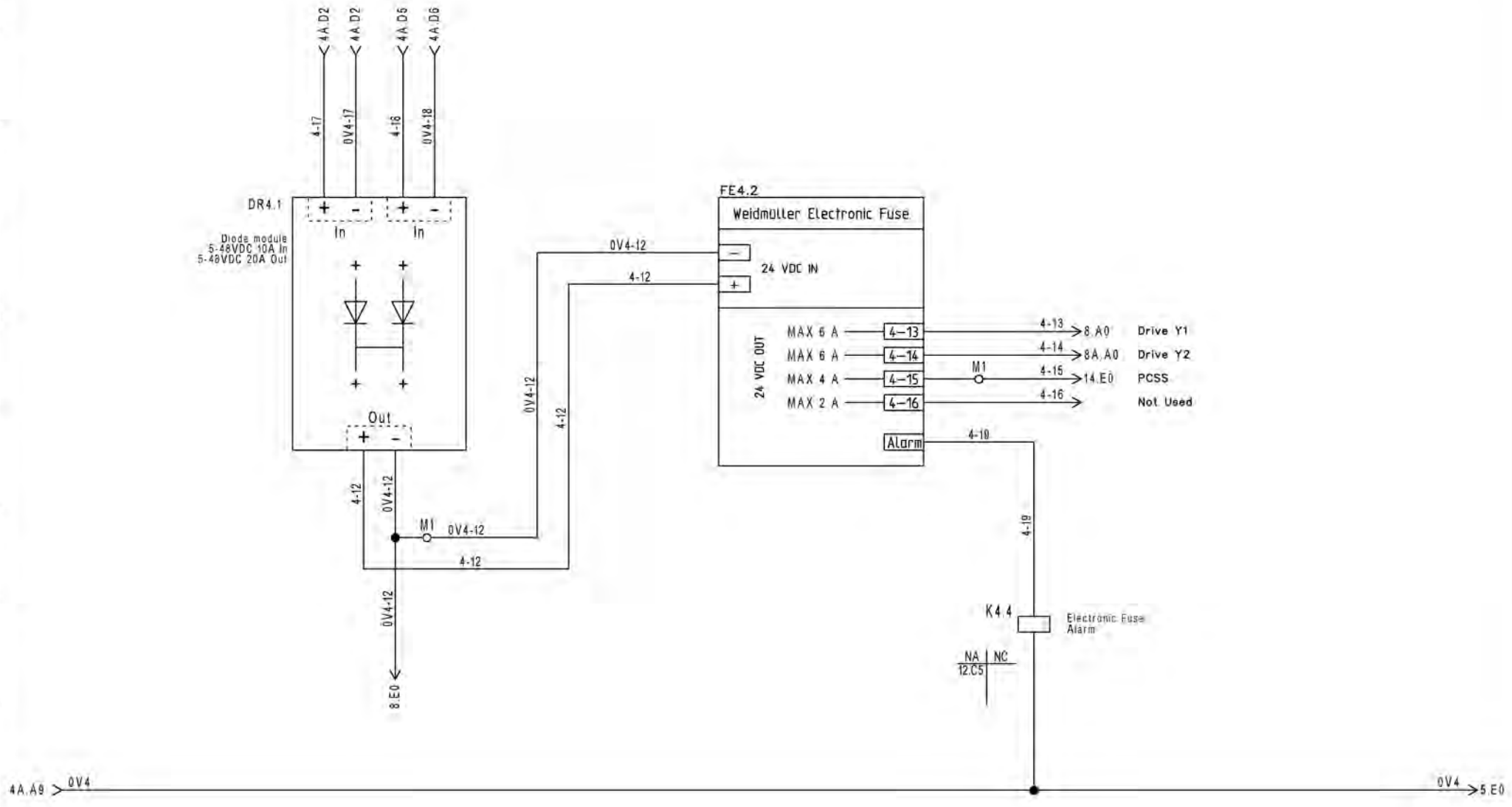

BLM GROUP

Cartier Drive 46850
Novi, MI 48377
Tel. +1 (248) 560 0080
Fax +1 (248) 560 0083
E-mail: service@blmgroupusa.com
Site: www.blmgroup.com

Project:	CN ESA - 420-200 TON		
Commission: 04-2021 / PE0122	Date: 20/04/2021	Customer:	BLM Group
Note: Wila Clamping - Wila Crowning - Double Pedalboard - LED Strip - Sheet Follower			

THIS DIAGRAM IS OUR EXCLUSIVE PROPERTY AND IT CAN'T BE SHOWN OR COPIED TO THIRD PARTIES NEITHER IN ORIGINAL OR IN COPY WITHOUT OUR AUTHORIZATION (art: 1152-1158-1161 c.c.)

Clamping Circuit

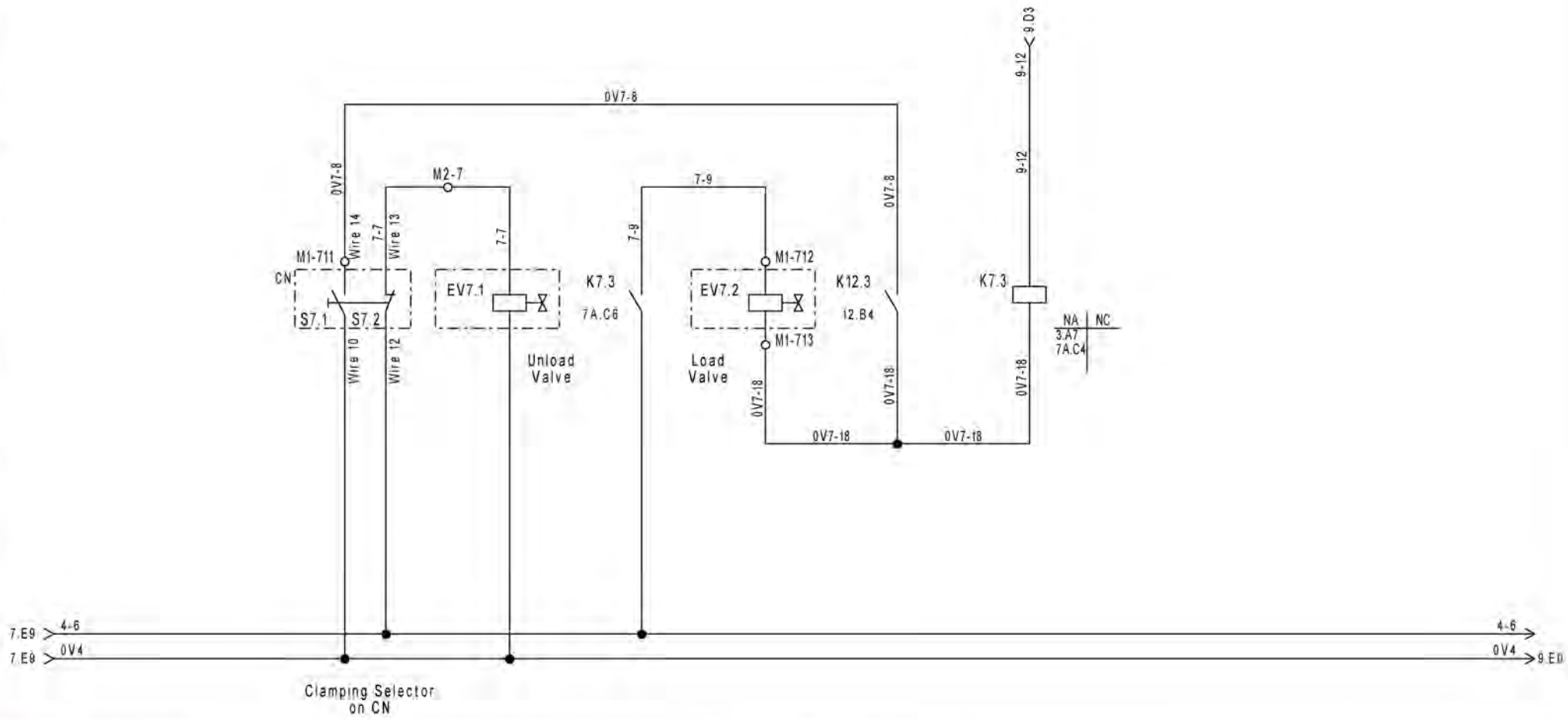

BLM GROUP

Cartier Drive 46850
Novi, MI 48377
Tel. +1 (248) 560 0080
Fax +1 (248) 560 0083
E-mail: service@blmgroupusa.com
Site: www.blmgroup.com

Project:	CN ESA - 420-200 TON		
Commission: 04-2021 / PE0122	Date: 20/04/2021	Customer:	BLM Group
Note: Wila Clamping - Wila Crowning - Double Pedalboard - LED Strip - Sheet Follower			

THIS DIAGRAM IS OUR EXCLUSIVE PROPERTY AND IT CAN'T BE SHOWN OR COPIED TO THIRD PARTIES NEITHER IN ORIGINAL OR IN COPY WITHOUT OUR AUTHORIZATION (art: 1152-1158-1161 c.c.)

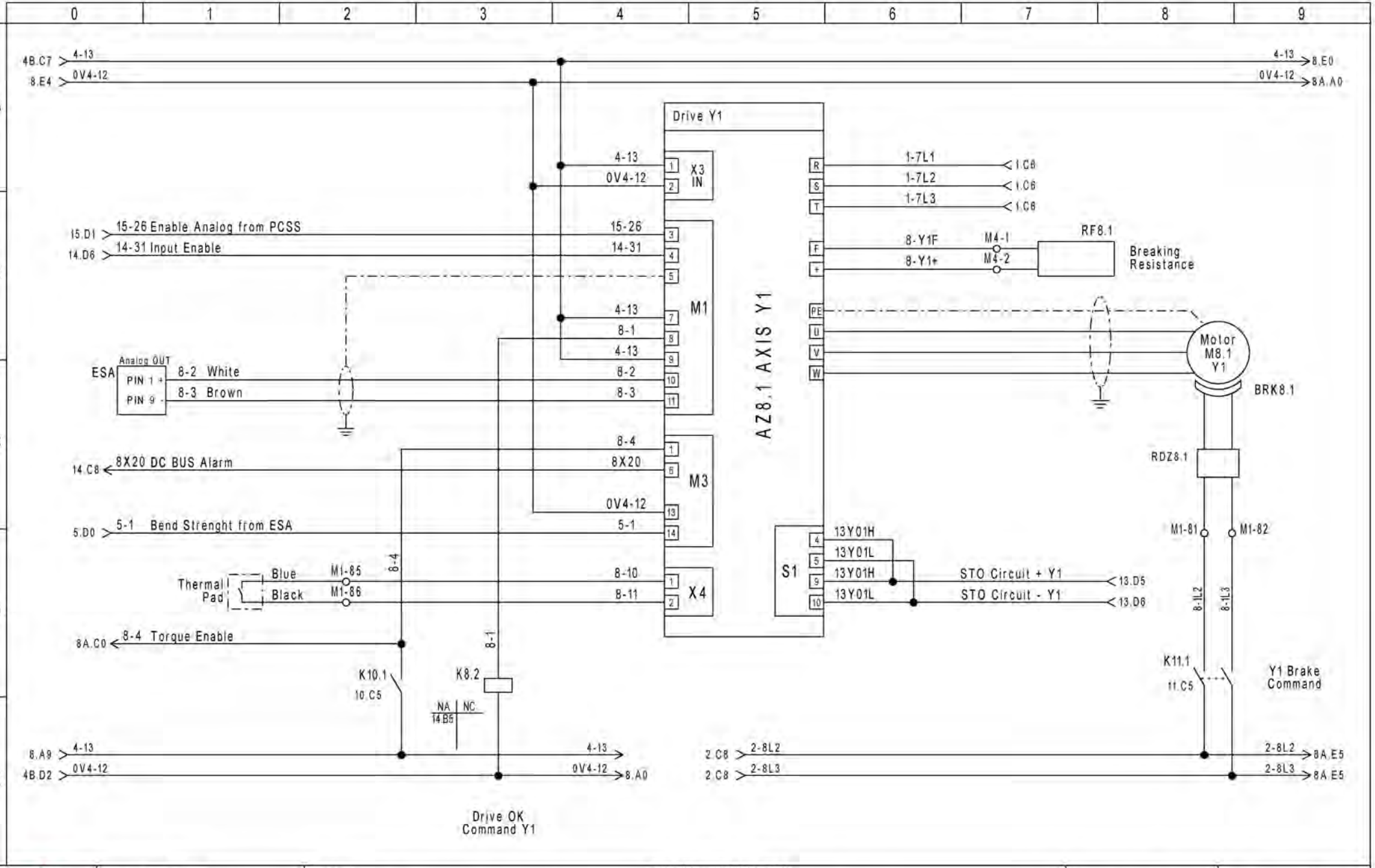

BLM GROUP

Cartier Drive 46850
Novi, MI 48377
Tel. +1 (248) 560 0080
Fax +1 (248) 560 0083
E-mail: service@blmgroupusa.com
Site: www.blmgroup.com

Project:	CN ESA - 420-200 TON		
Commission: 04-2021 / PE0122	Date: 20/04/2021	Customer:	BLM Group
Note: Wila Clamping - Wila Crowning - Double Pedalboard - LED Strip - Sheet Follower			

THIS DIAGRAM IS OUR EXCLUSIVE PROPERTY AND IT CAN'T BE SHOWN OR COPIED TO THIRD PARTIES NEITHER IN ORIGINAL OR IN COPY WITHOUT OUR AUTHORIZATION (art: 1152-1158-1161 c.c.)

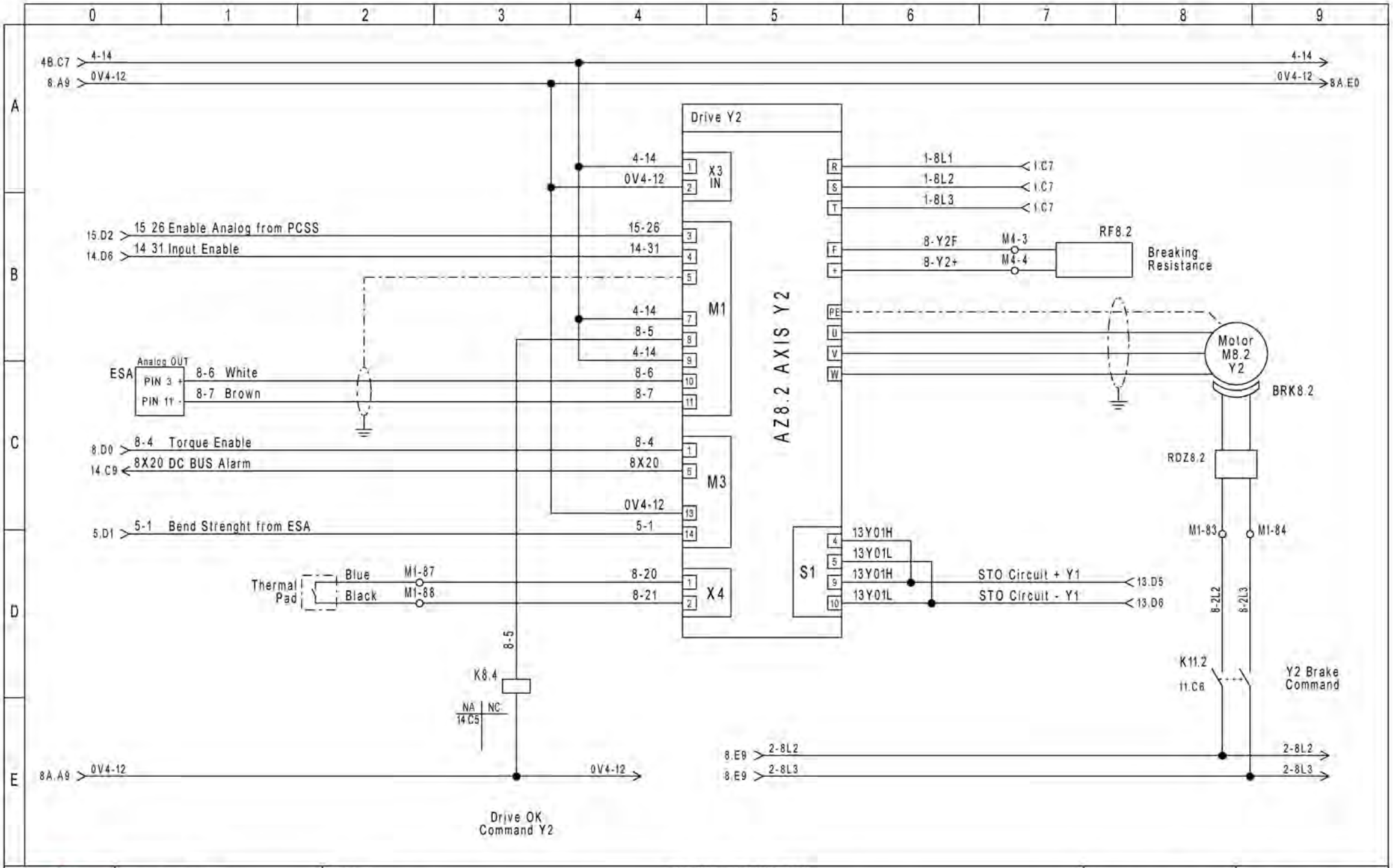

BLM GROUP

Cartier Drive 46850
Novi, MI 48377
Tel. +1 (248) 560 0080
Fax +1 (248) 560 0083
E-mail: service@blmgroupusa.com
Site: www.blmgroup.com

Project:	CN ESA - 420-200 TON		
Commission: 04-2021 / PE0122	Date: 20/04/2021	Customer:	BLM Group
Note: Wila Clamping - Wila Crowning - Double Pedalboard - LED Strip - Sheet Follower			

THIS DIAGRAM IS OUR EXCLUSIVE PROPERTY AND IT CAN'T BE SHOWN OR COPIED TO THIRD PARTIES NEITHER IN ORIGINAL OR IN COPY WITHOUT OUR AUTHORIZATION (art: 1152-1158-1161 c.c.)

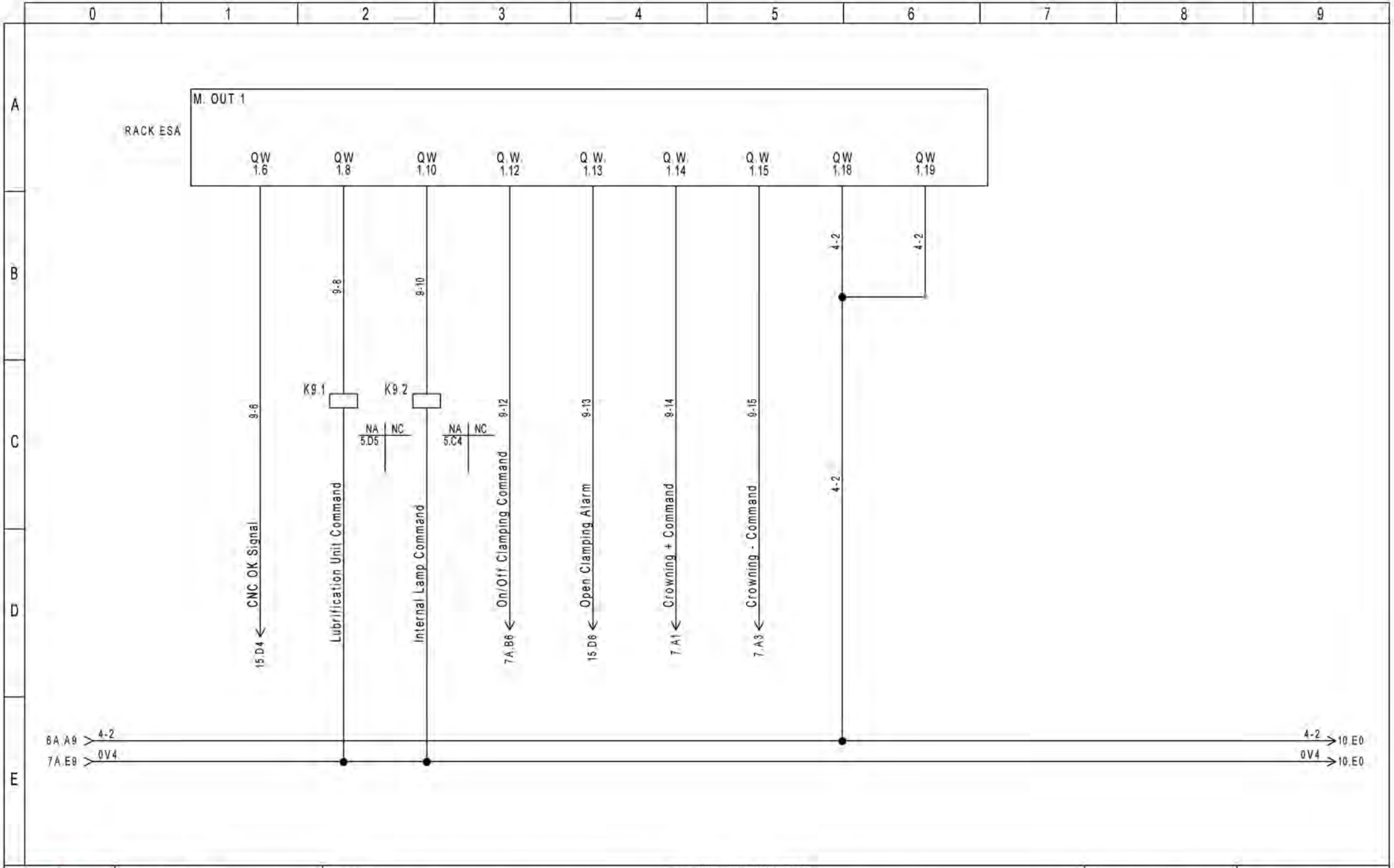

BLM GROUP

Cartier Drive 46850
Novi, MI 48377
Tel. +1 (248) 560 0080
Fax +1 (248) 560 0083
E-mail: service@blmgroupusa.com
Site: www.blmgroup.com

Project:	CN ESA - 420-200 TON		
Commission: 04-2021 / PE0122	Date: 20/04/2021	Customer:	BLM Group
Note: Wila Clamping - Wila Crowning - Double Pedalboard - LED Strip - Sheet Follower			

THIS DIAGRAM IS OUR EXCLUSIVE PROPERTY AND IT CAN'T BE SHOWN OR COPIED TO THIRD PARTIES NEITHER IN ORIGINAL OR IN COPY WITHOUT OUR AUTHORIZATION (art: 1152-1158-1161 c.c.)

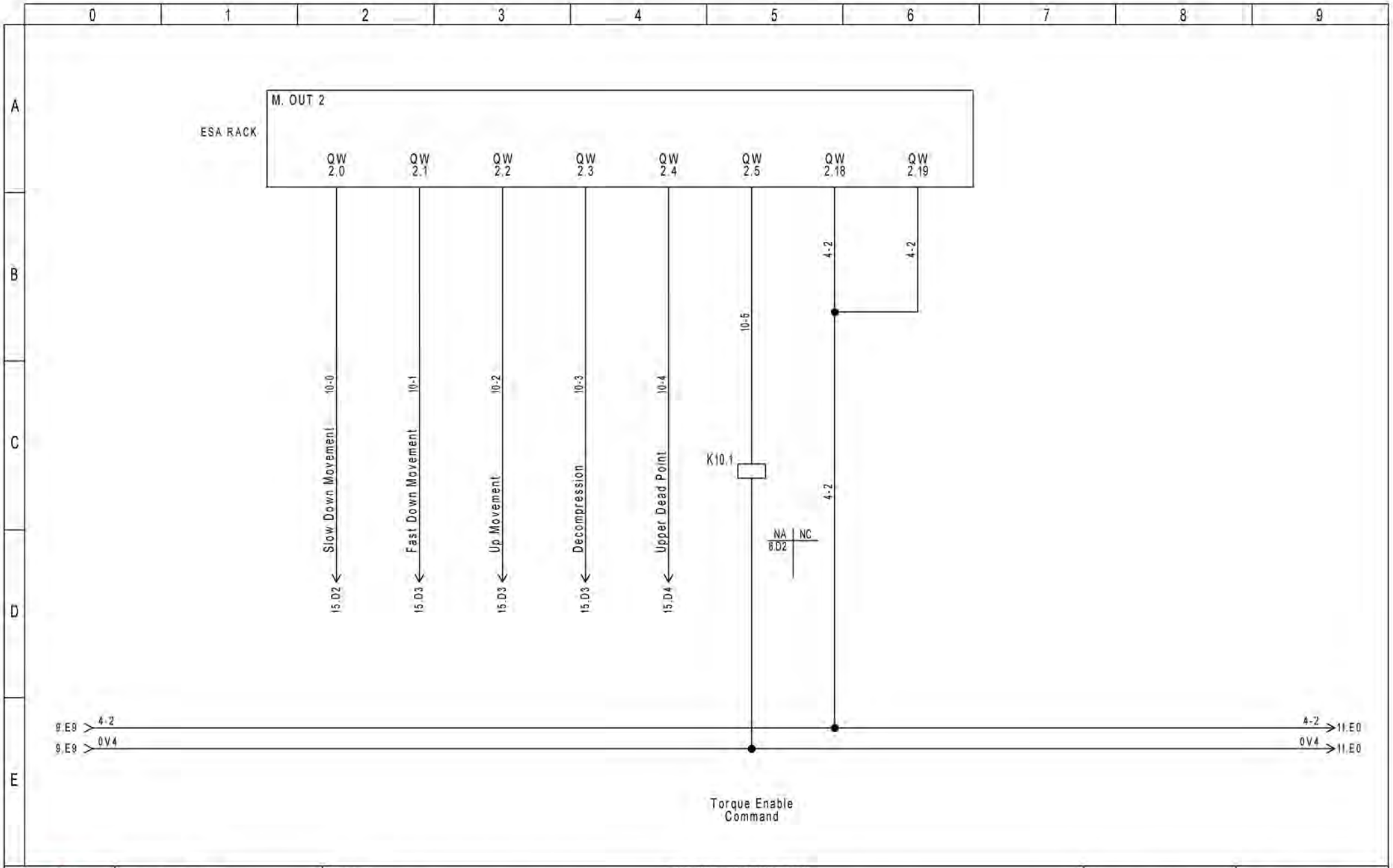

BLM GROUP

Cartier Drive 46850
Novi, MI 48377
Tel. +1 (248) 560 0080
Fax +1 (248) 560 0083
E-mail: service@blmgroupusa.com
Site: www.blmgroup.com

Project:	CN ESA - 420-200 TON		
Commission: 04-2021 / PE0122	Date: 20/04/2021	Customer:	BLM Group
Note: Wila Clamping - Wila Crowning - Double Pedalboard - LED Strip - Sheet Follower			

THIS DIAGRAM IS OUR EXCLUSIVE PROPERTY AND IT CAN'T BE SHOWN OR COPIED TO THIRD PARTIES NEITHER IN ORIGINAL OR IN COPY WITHOUT OUR AUTHORIZATION (art: 1152-1158-1161 c.c.)

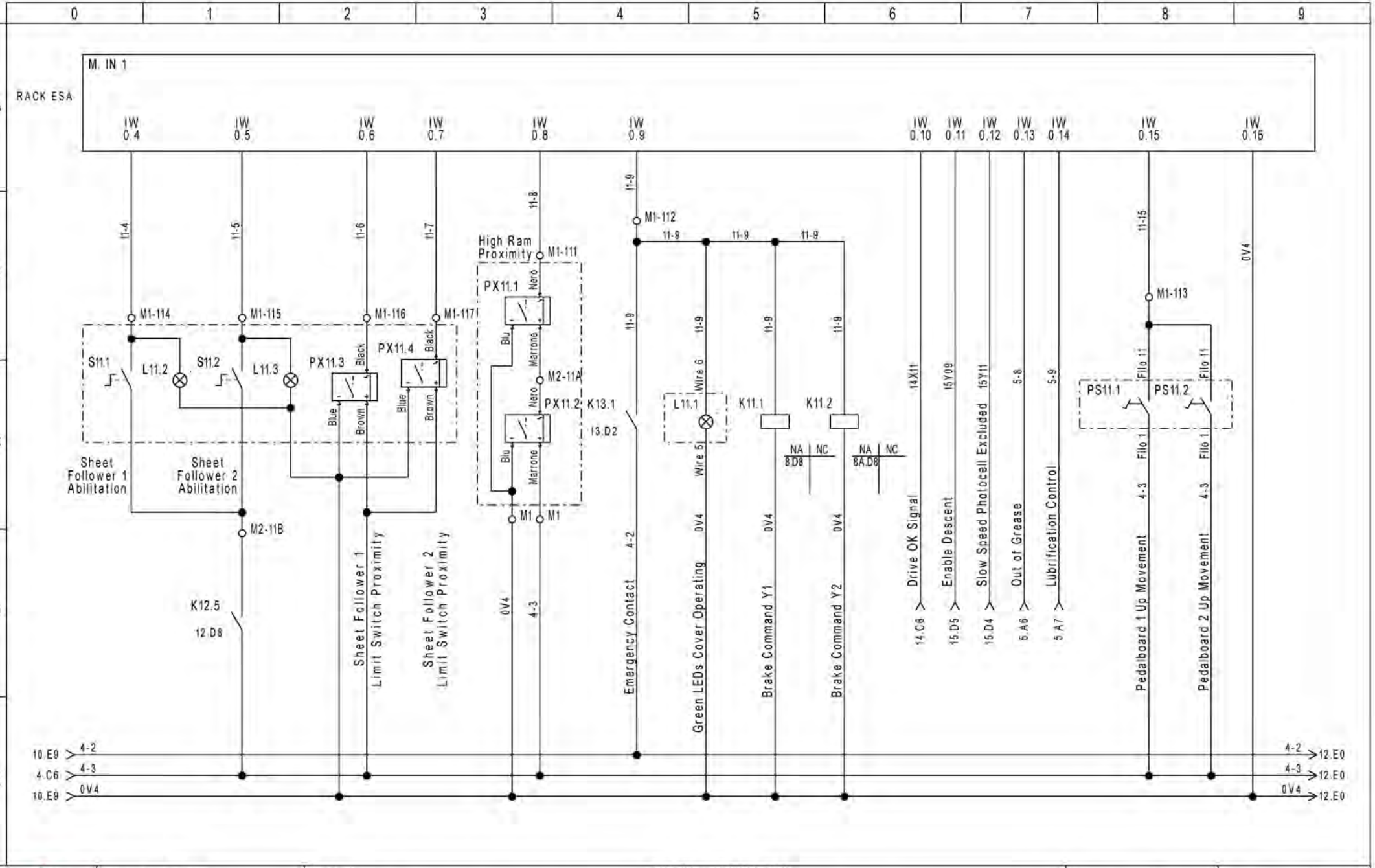

BLM GROUP
Cartier Drive 46850
Novi, MI 48377
Tel. +1 (248) 560 0080
Fax +1 (248) 560 0083
E-mail: service@blmgroupusa.com
Site: www.blmgroup.com

Project:	CN ESA - 420-200 TON		
Commission: 04-2021 / PE0122	Date: 20/04/2021	Customer:	BLM Group
Note: Wila Clamping - Wila Crowning - Double Pedalboard - LED Strip - Sheet Follower			

THIS DIAGRAM IS OUR EXCLUSIVE PROPERTY AND IT CAN'T BE SHOWN OR COPIED TO THIRD PARTIES NEITHER IN ORIGINAL OR IN COPY WITHOUT OUR AUTHORIZATION (art: 1152-1158-1161 c.c.)

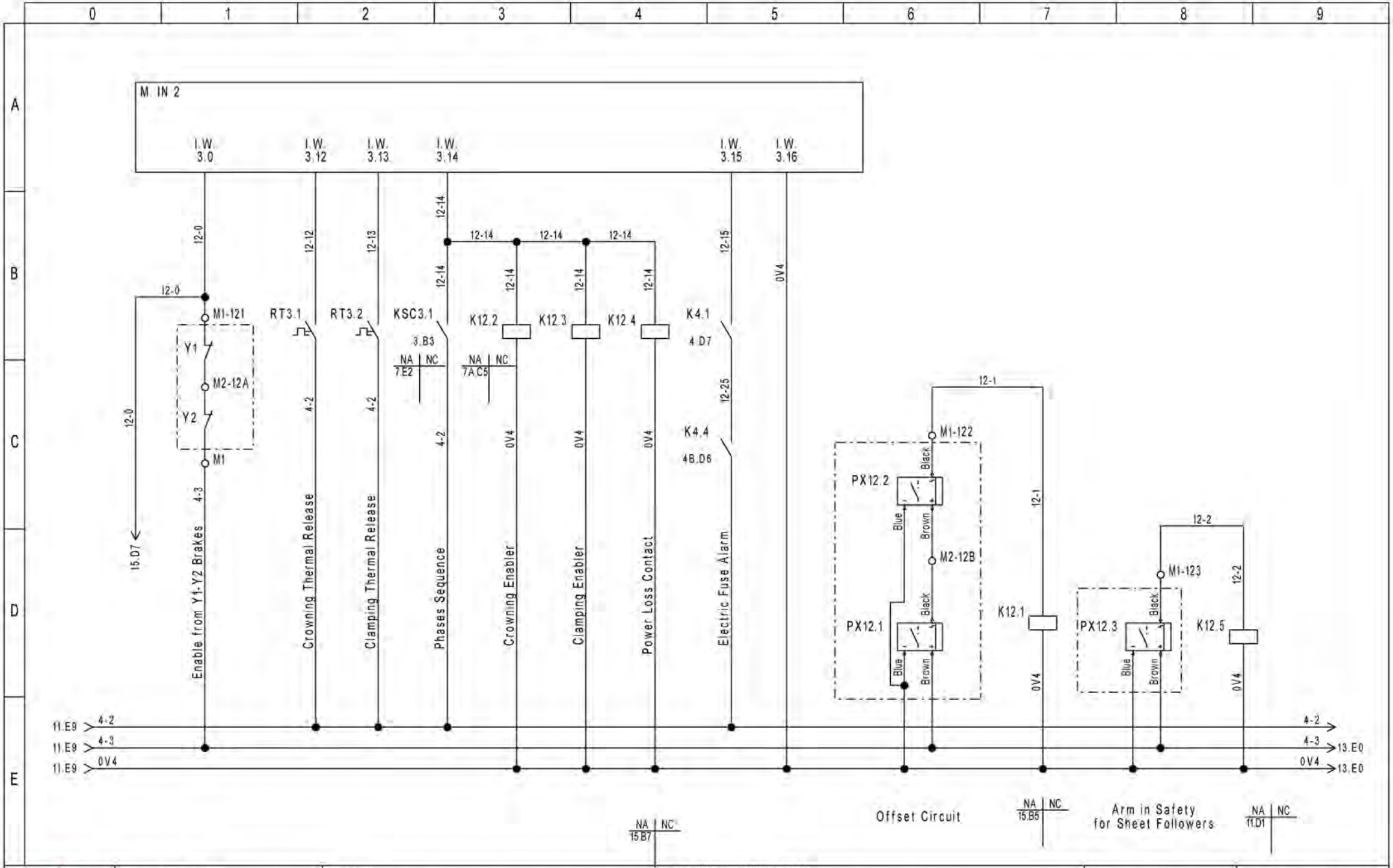

BLM GROUP

Cartier Drive 46850
Novi, MI 48377
Tel. +1 (248) 560 0080
Fax +1 (248) 560 0083
E-mail: service@blmgroupusa.com
Site: www.blmgroup.com

Project:	CN ESA - 420-200 TON		
Commission: 04-2021 / PE0122	Date: 20/04/2021	Customer:	BLM Group
Note: Wila Clamping - Wila Crowning - Double Pedalboard - LED Strip - Sheet Follower			

THIS DIAGRAM IS OUR EXCLUSIVE PROPERTY AND IT CAN'T BE SHOWN OR COPIED TO THIRD PARTIES NEITHER IN ORIGINAL OR IN COPY WITHOUT OUR AUTHORIZATION (art: 1152-1158-1161 c.c.)

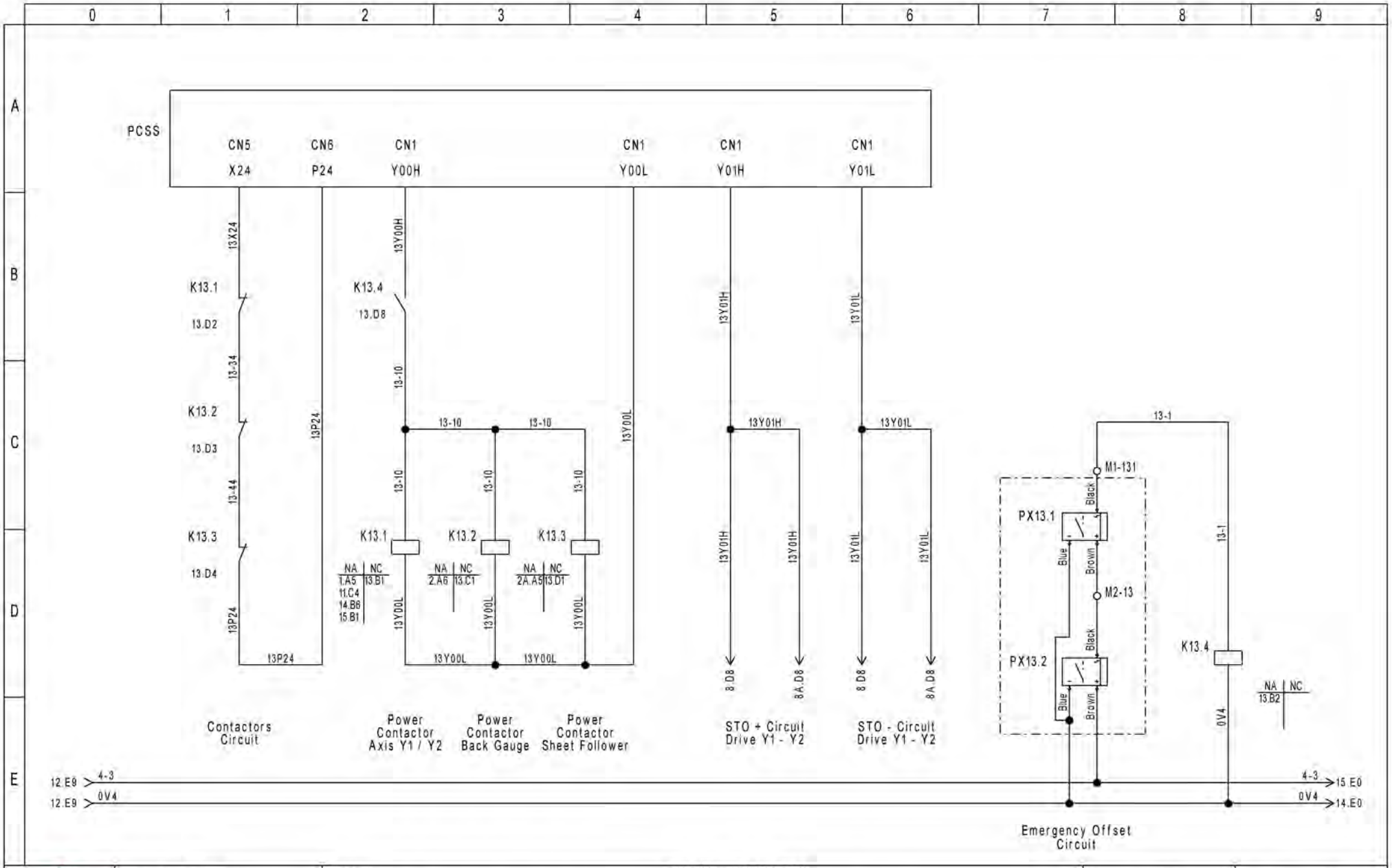

BLM GROUP

Cartier Drive 46850
Novi, MI 48377
Tel. +1 (248) 560 0080
Fax +1 (248) 560 0083
E-mail: service@blmgroupusa.com
Site: www.blmgroup.com

Project:	CN ESA - 420-200 TON		
Commission: 04-2021 / PE0122	Date: 20/04/2021	Customer:	BLM Group
Note: Wila Clamping - Wila Crowning - Double Pedalboard - LED Strip - Sheet Follower			

THIS DIAGRAM IS OUR EXCLUSIVE PROPERTY AND IT CAN'T BE SHOWN OR COPIED TO THIRD PARTIES NEITHER IN ORIGINAL OR IN COPY WITHOUT OUR AUTHORIZATION (art: 1152-1158-1161 c.c.)

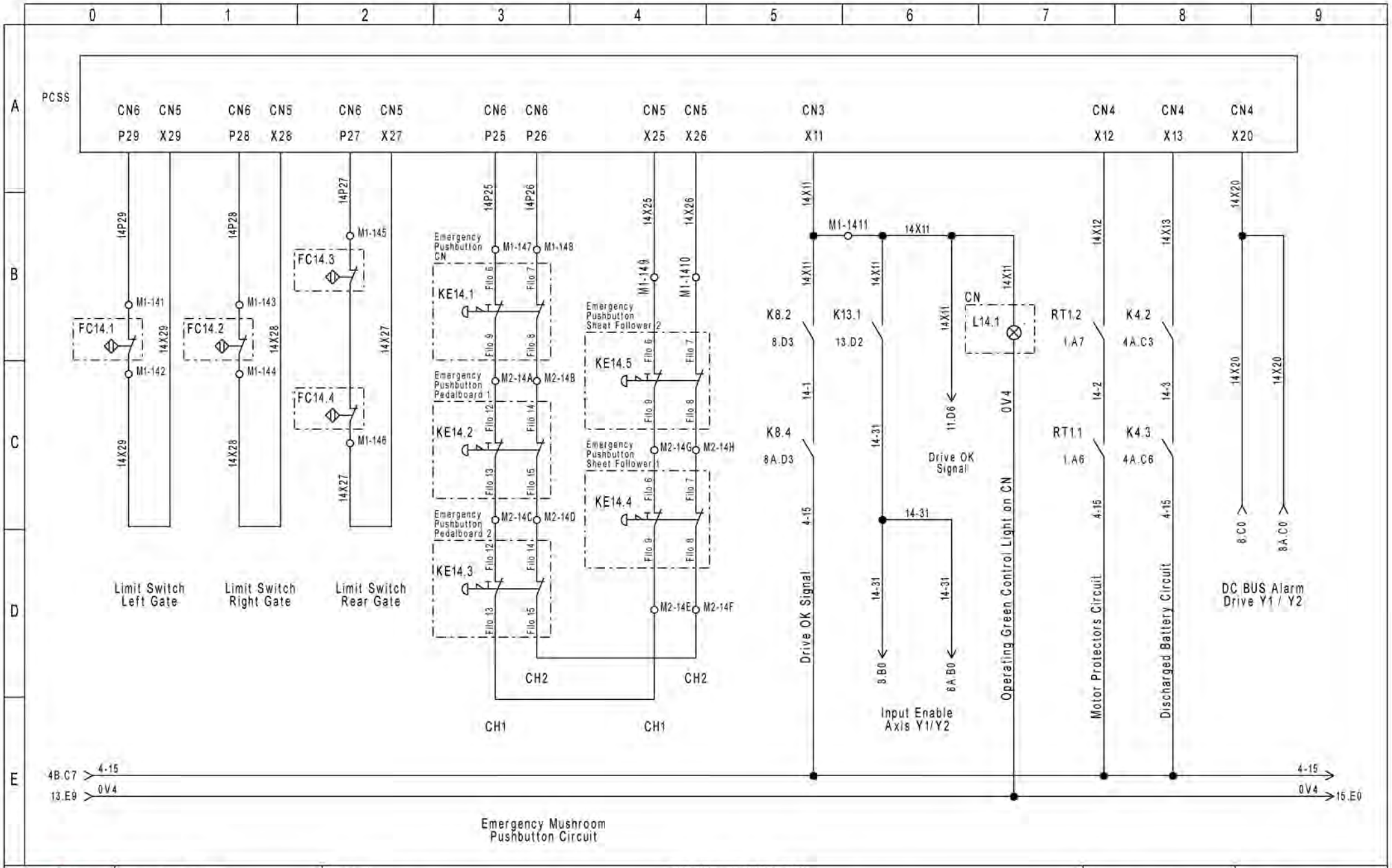

BLM GROUP

Cartier Drive 46850
Novi, MI 48377
Tel. +1 (248) 560 0080
Fax +1 (248) 560 0083
E-mail: service@blmgroupusa.com
Site: www.blmgroup.com

Project:	CN ESA - 420-200 TON		
Commission: 04-2021 / PE0122	Date: 20/04/2021	Customer:	BLM Group
Note: Wila Clamping - Wila Crowning - Double Pedalboard - LED Strip - Sheet Follower			

THIS DIAGRAM IS OUR EXCLUSIVE PROPERTY AND IT CAN'T BE SHOWN OR COPIED TO THIRD PARTIES NEITHER IN ORIGINAL OR IN COPY WITHOUT OUR AUTHORIZATION (art: 1152-1158-1161 c.c.)

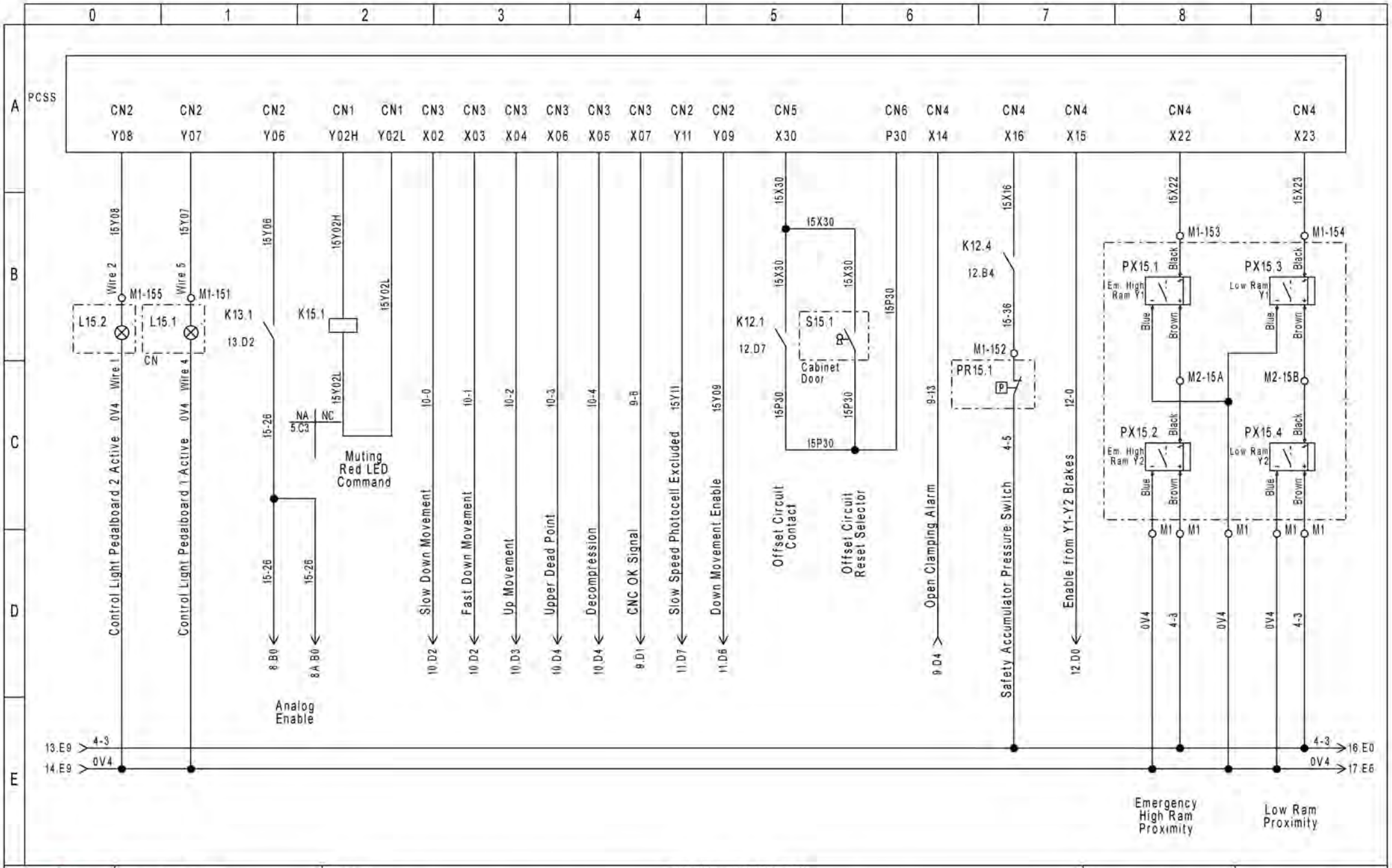

BLM GROUP
Cartier Drive 46850
Novi, MI 48377
Tel. +1 (248) 560 0080
Fax +1 (248) 560 0083
E-mail: service@blmgroupusa.com
Site: www.blmgroup.com

Project:	CN ESA - 420-200 TON		
Commission: 04-2021 / PE0122	Date: 20/04/2021	Customer:	BLM Group
Note: Wila Clamping - Wila Crowning - Double Pedalboard - LED Strip - Sheet Follower			

THIS DIAGRAM IS OUR EXCLUSIVE PROPERTY AND IT CAN'T BE SHOWN OR COPIED TO THIRD PARTIES NEITHER IN ORIGINAL OR IN COPY WITHOUT OUR AUTHORIZATION (art: 1152-1158-1161 c.c.)

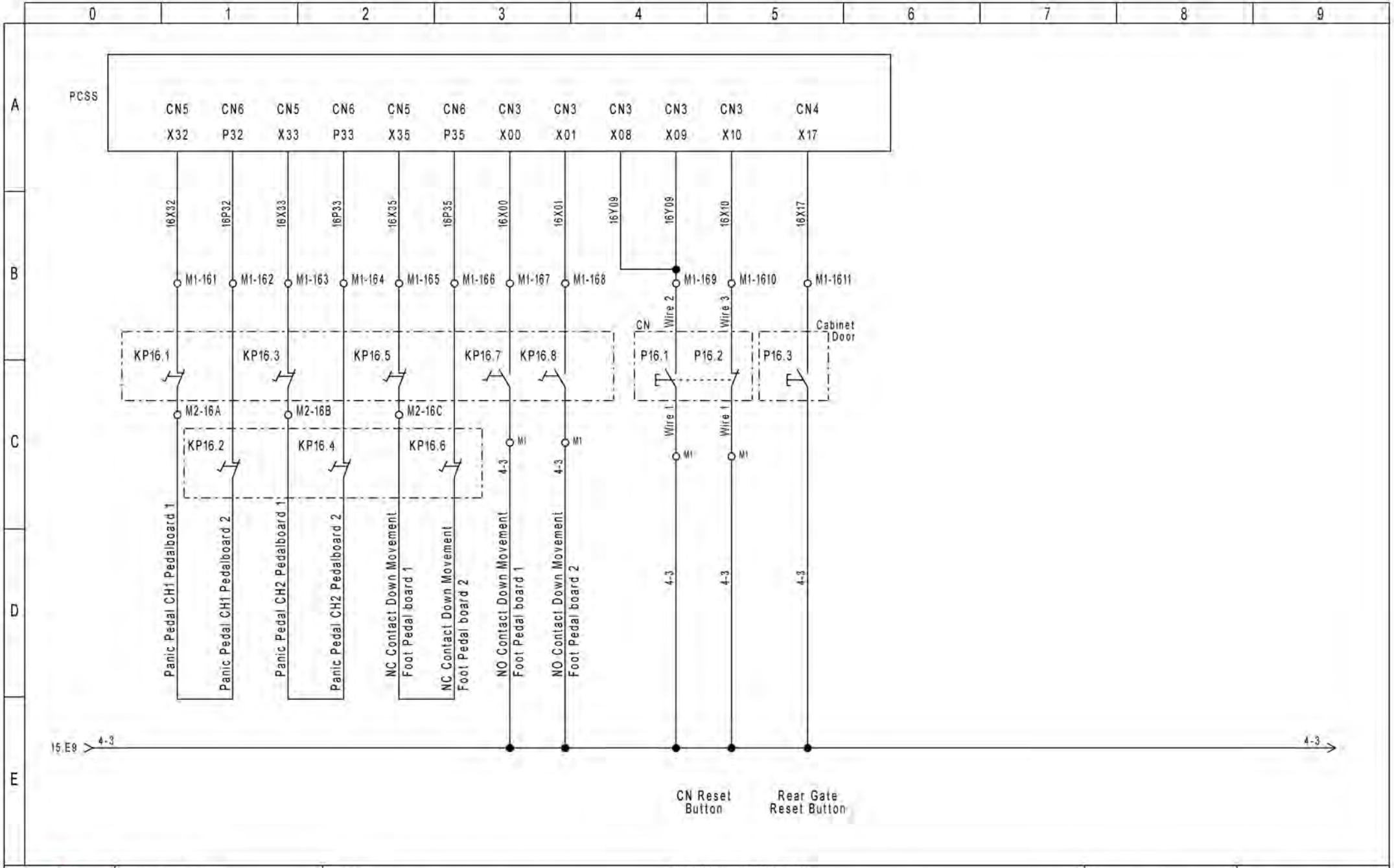

BLM GROUP

Cartier Drive 46850
Novi, MI 48377
Tel. +1 (248) 560 0080
Fax +1 (248) 560 0083
E-mail: service@blmgroupusa.com
Site: www.blmgroup.com

Project:	CN ESA - 420-200 TON		
Commission: 04-2021 / PE0122	Date: 20/04/2021	Customer:	BLM Group
Note: Wila Clamping - Wila Crowning - Double Pedalboard - LED Strip - Sheet Follower			

THIS DIAGRAM IS OUR EXCLUSIVE PROPERTY AND IT CAN'T BE SHOWN OR COPIED TO THIRD PARTIES NEITHER IN ORIGINAL OR IN COPY WITHOUT OUR AUTHORIZATION (art: 1152-1158-1161 c.c.)

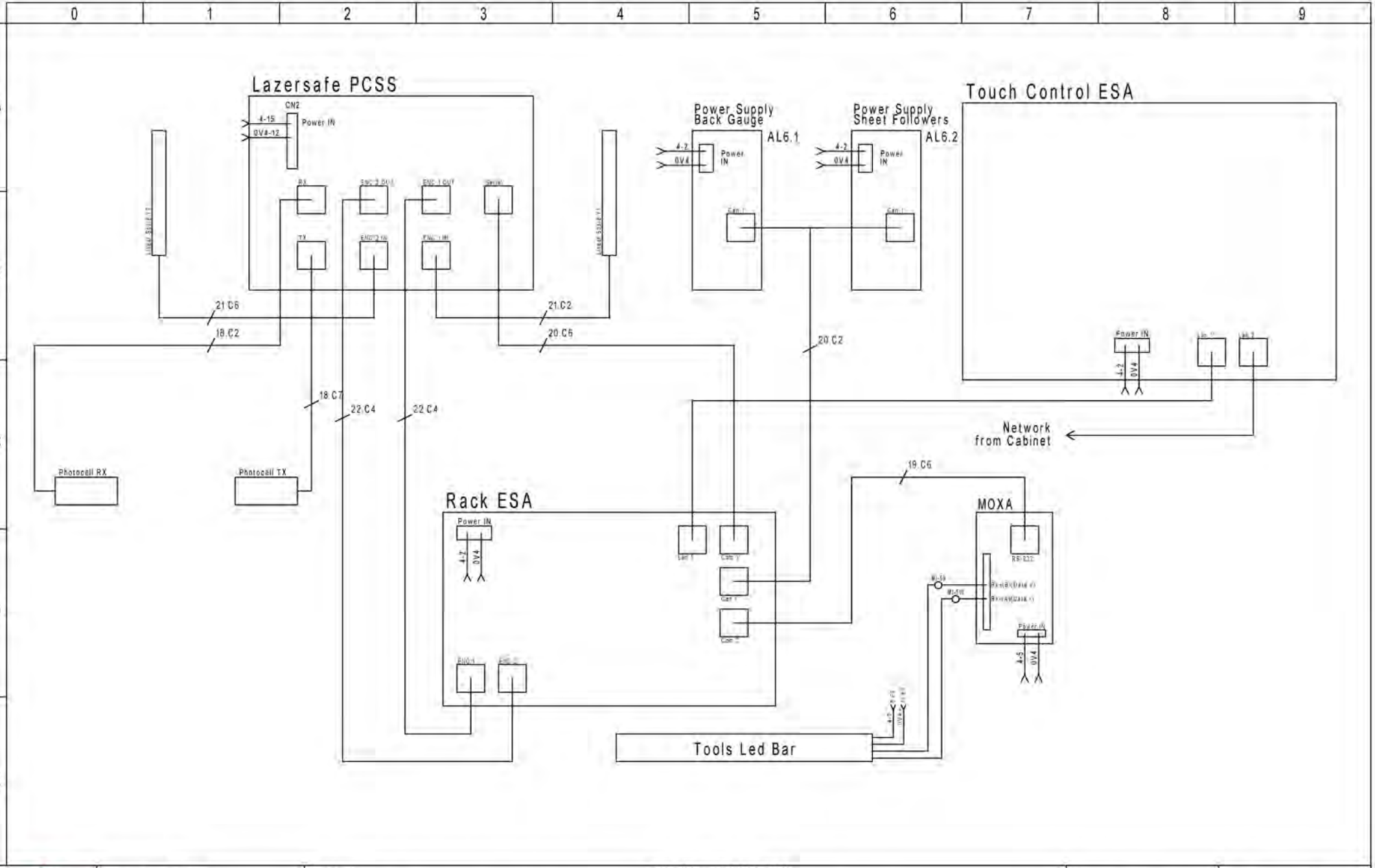

BLM GROUP

Cartier Drive 46850
Novi, MI 48377
Tel. +1 (248) 560 0080
Fax +1 (248) 560 0083
E-mail: service@blmgroupusa.com
Site: www.blmgroup.com

Project:	CN ESA - 420-200 TON		
Commission: 04-2021 / PE0122	Date: 20/04/2021	Customer:	BLM Group
Note: Wila Clamping - Wila Crowning - Double Pedalboard - LED Strip - Sheet Follower			

THIS DIAGRAM IS OUR EXCLUSIVE PROPERTY AND IT CAN'T BE SHOWN OR COPIED TO THIRD PARTIES NEITHER IN ORIGINAL OR IN COPY WITHOUT OUR AUTHORIZATION (art: 1152-1158-1161 c.c.)

M3 Foot Pedal Board 1

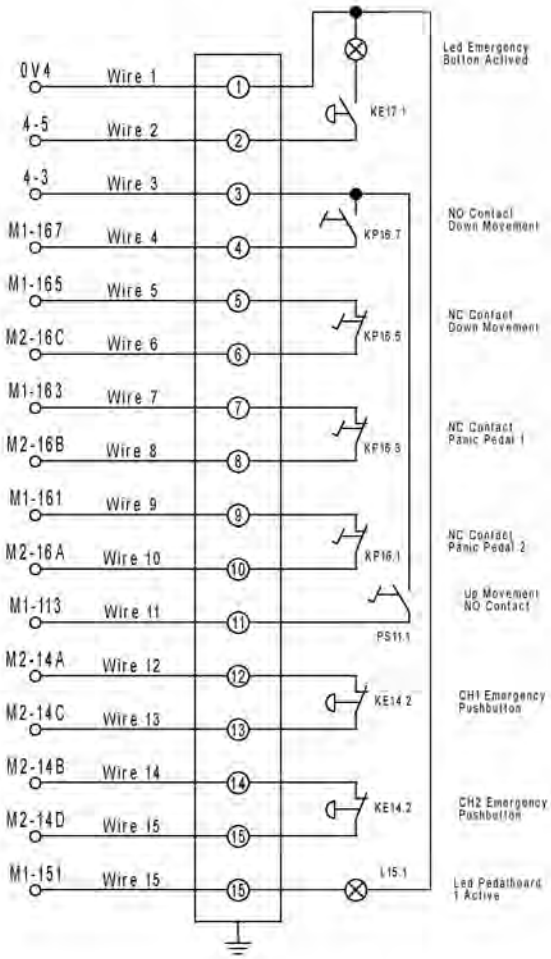

M3A Foot Pedal Board 2

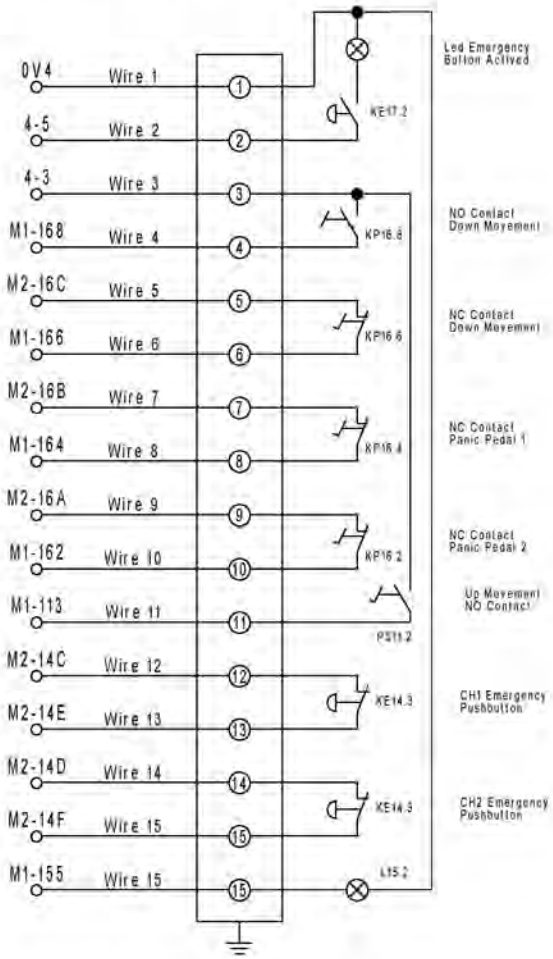

CN Controls

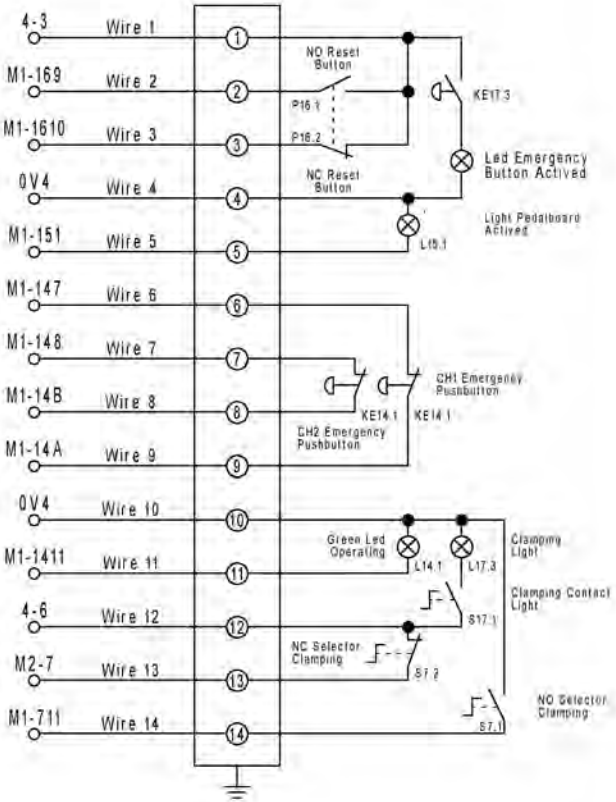

BLM GROUP

Cartier Drive 46850
Novi, MI 48377
Tel. +1 (248) 560 0080
Fax +1 (248) 560 0083
E-mail: service@blmgroupusa.com
Site: www.blmgroup.com

Project:	CN ESA - 420-200 TON		
Commission: 04-2021 / PE0122	Date: 20/04/2021	Customer:	BLM Group
Note: Wila Clamping - Wila Crowning - Double Pedalboard - LED Strip - Sheet Follower			

THIS DIAGRAM IS OUR EXCLUSIVE PROPERTY AND IT CAN'T BE SHOWN OR COPIED TO THIRD PARTIES NEITHER IN ORIGINAL OR IN COPY WITHOUT OUR AUTHORIZATION (art: 1152-1158-1161 c.c.)

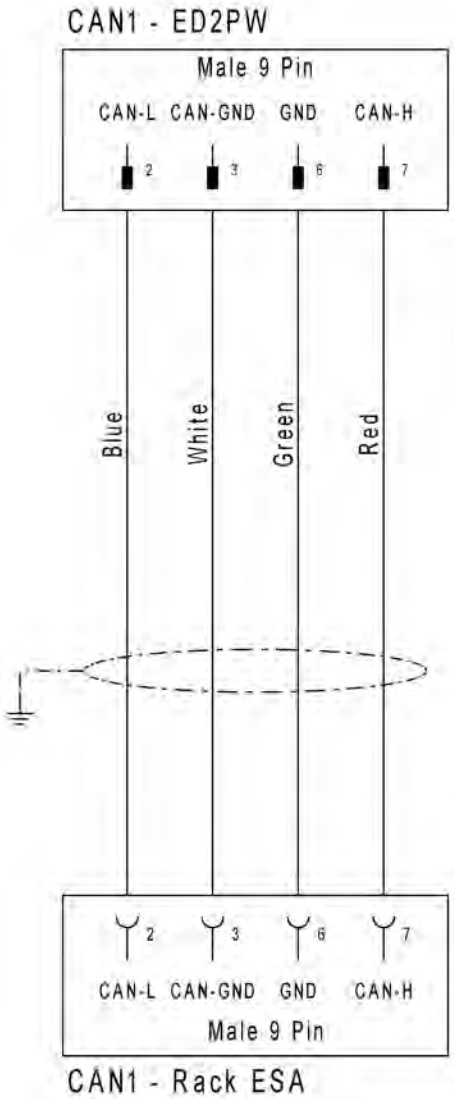

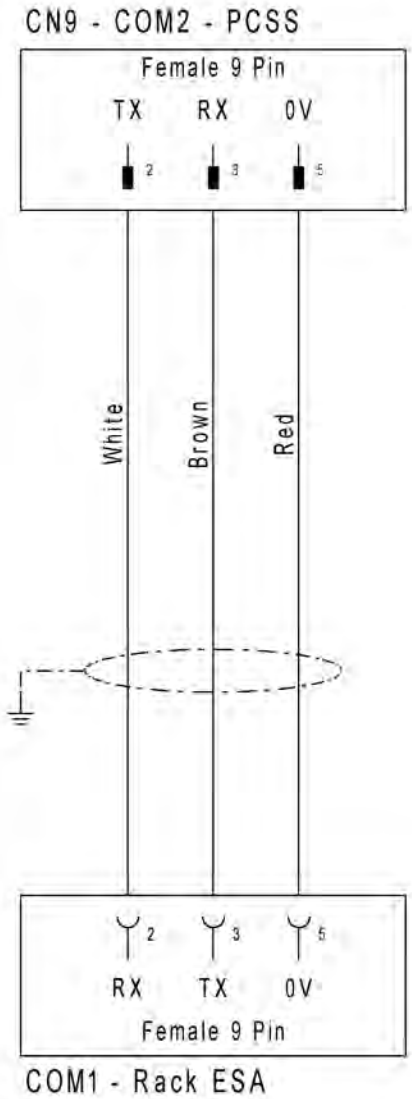

BLM GROUP
Cartier Drive 46850
Novi, MI 48377
Tel. +1 (248) 560 0080
Fax +1 (248) 560 0083
E-mail: service@blmgroupusa.com
Site: www.blmgroup.com

Project:	CN ESA - 420-200 TON		
Commission: 04-2021 / PE0122	Date: 20/04/2021	Customer:	BLM Group
Note: Wila Clamping - Wila Crowning - Double Pedalboard - LED Strip - Sheet Follower			

THIS DIAGRAM IS OUR EXCLUSIVE PROPERTY AND IT CAN'T BE SHOWN OR COPIED TO THIRD PARTIES NEITHER IN ORIGINAL OR IN COPY WITHOUT OUR AUTHORIZATION (art: 1152-1158-1161 c.c.)

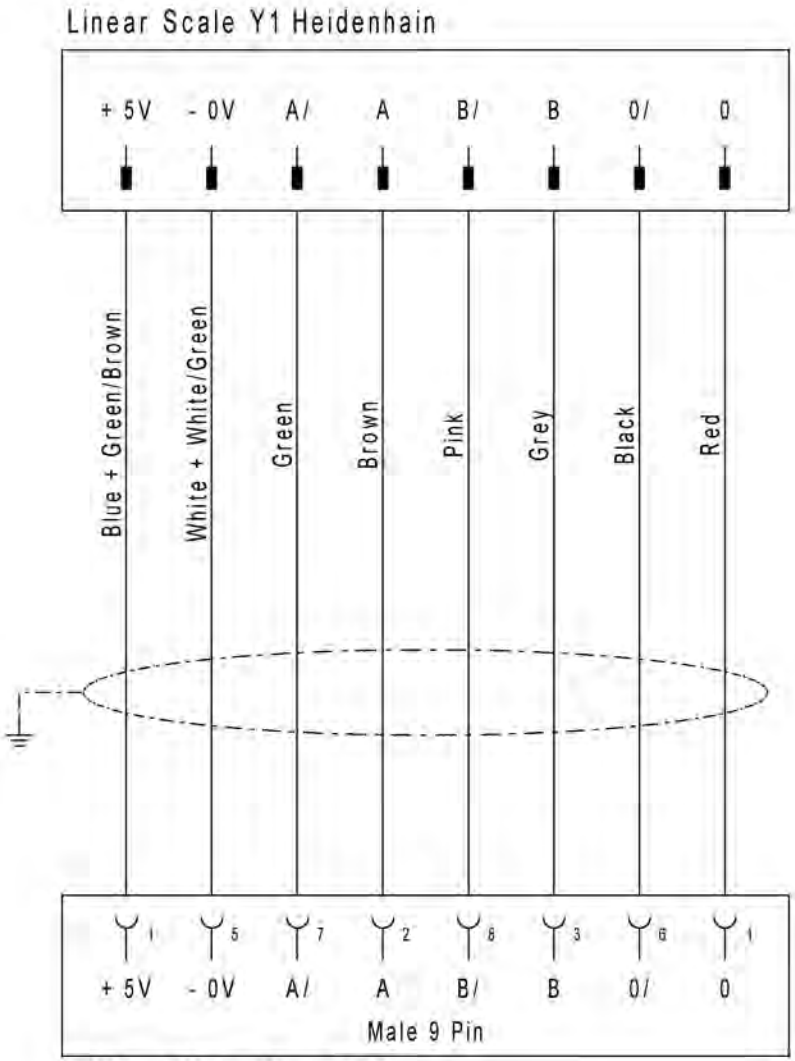

CN12 - ENC 1 IN - PCSS

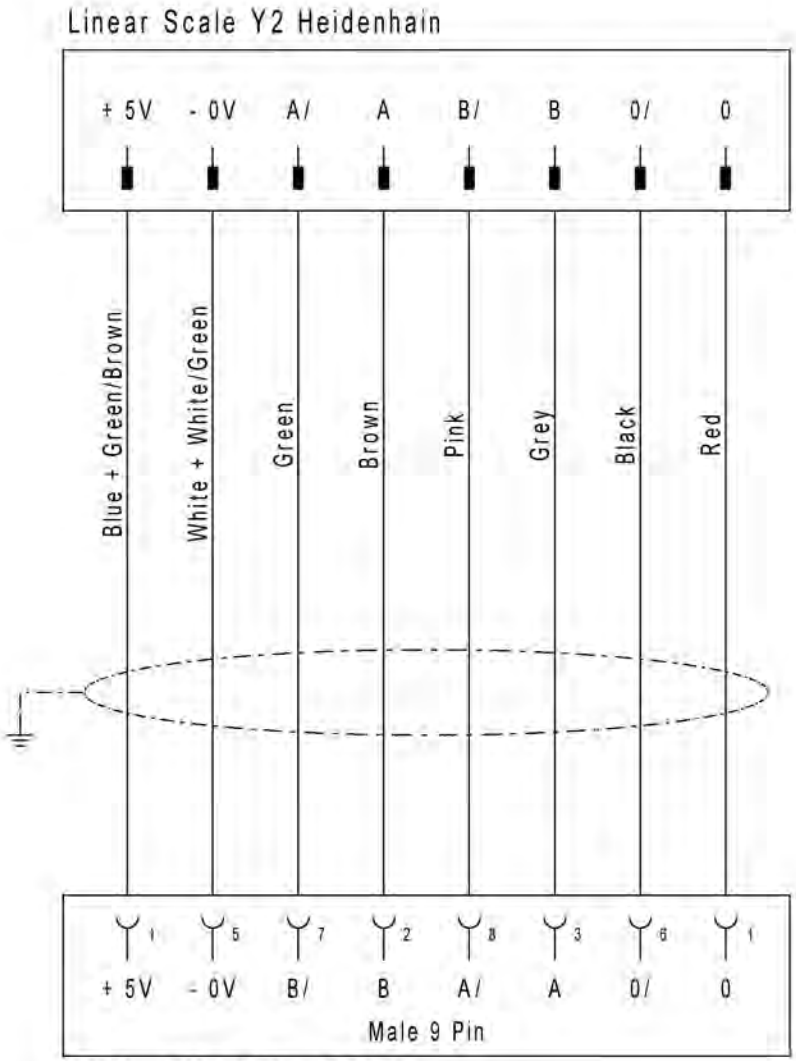

CN14 - ENC 2 IN - PCSS

BLM GROUP
Cartier Drive 46850
Novi, MI 48377
Tel. +1 (248) 560 0080
Fax +1 (248) 560 0083
E-mail: service@blmgroupusa.com
Site: www.blmgroup.com

Project:	CN ESA - 420-200 TON		
Commission: 04-2021 / PE0122	Date: 20/04/2021	Customer:	BLM Group
Note: Wila Clamping - Wila Crowning - Double Pedalboard - LED Strip - Sheet Follower			

THIS DIAGRAM IS OUR EXCLUSIVE PROPERTY AND IT CAN'T BE SHOWN OR COPIED TO THIRD PARTIES NEITHER IN ORIGINAL OR IN COPY WITHOUT OUR AUTHORIZATION (art: 1152-1158-1161 c.c.)

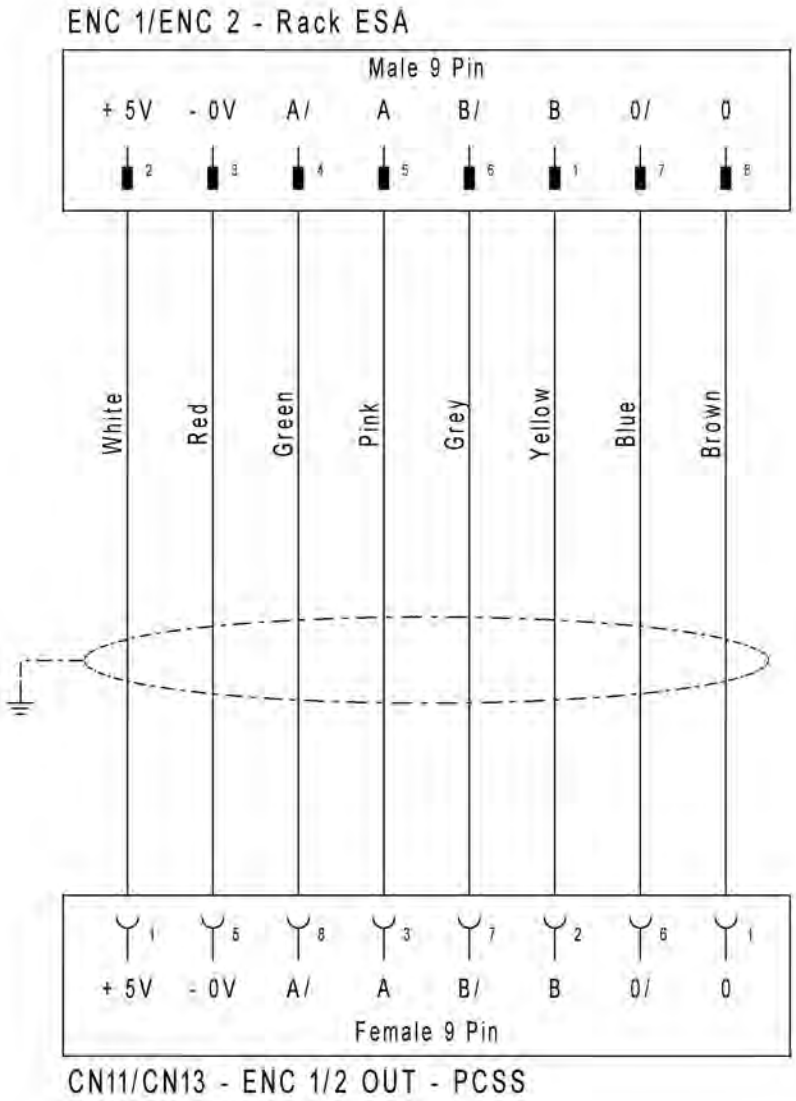

BLM GROUP
Cartier Drive 46850
Novi, MI 48377
Tel. +1 (248) 560 0080
Fax +1 (248) 560 0083
E-mail: service@blmgroupusa.com
Site: www.blmgroup.com

Project:	CN ESA - 420-200 TON		
Commission: 04-2021 / PE0122	Date: 20/04/2021	Customer:	BLM Group
Note: Wila Clamping - Wila Crowning - Double Pedalboard - LED Strip - Sheet Follower			

THIS DIAGRAM IS OUR EXCLUSIVE PROPERTY AND IT CAN'T BE SHOWN OR COPIED TO THIRD PARTIES NEITHER IN ORIGINAL OR IN COPY WITHOUT OUR AUTHORIZATION (art: 1152-1158-1161 c.c.)

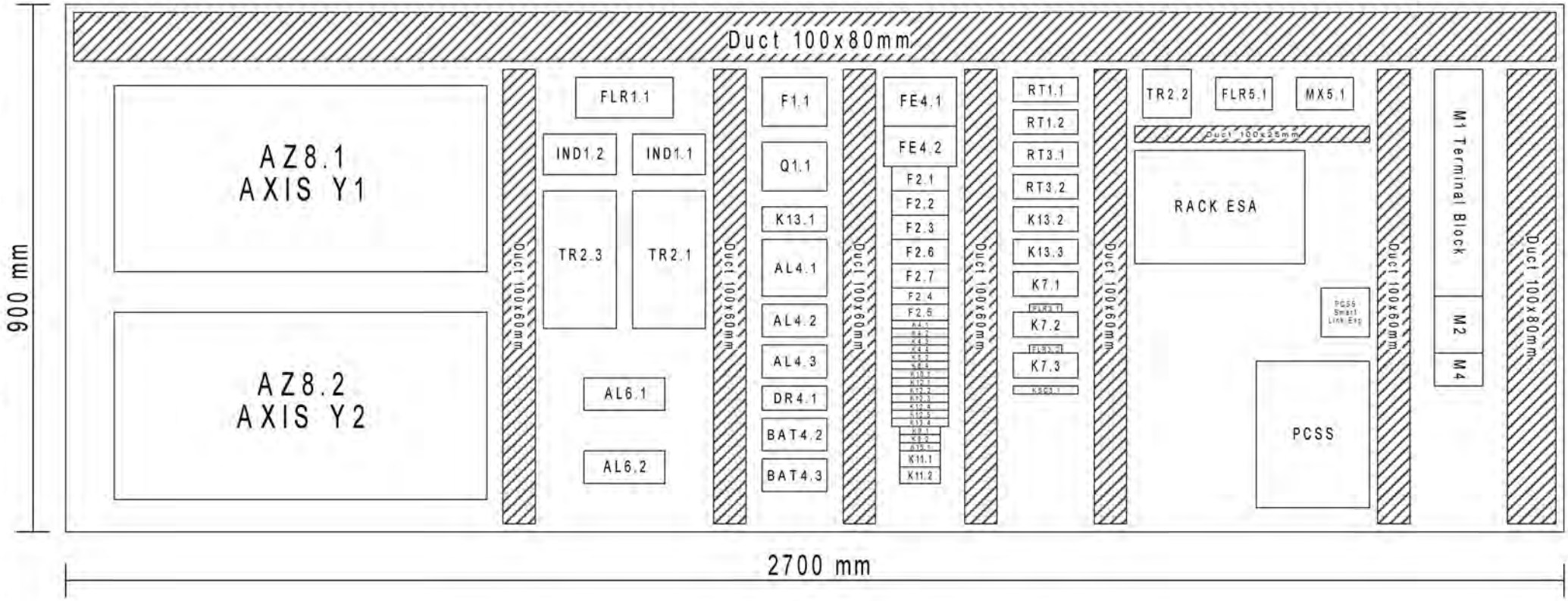

BLM GROUP

Cartier Drive 46850
Novi, MI 48377
Tel. +1 (248) 560 0080
Fax +1 (248) 560 0083
E-mail: service@blmgroupusa.com
Site: www.blmgroup.com

Project:	CN ESA - 420-200 TON		
Commission: 04-2021 / PE0122	Date: 20/04/2021	Customer:	BLM Group
Note: Wila Clamping - Wila Crowning - Double Pedalboard - LED Strip - Sheet Follower			

THIS DIAGRAM IS OUR EXCLUSIVE PROPERTY AND IT CAN'T BE SHOWN OR COPIED TO THIRD PARTIES NEITHER IN ORIGINAL OR IN COPY WITHOUT OUR AUTHORIZATION (art: 1152-1158-1161 c.c.)

Terminal Block M1		
Morsetto	**Descrizione**	**Componente**
R-S-T	Main Power	Q1.1
M1-31/32/33	Clamping Motor	M3.1
0V4	Main Negative 24V	/
4-1 to 4-6	Various Positive 24V	/
4-15 and 0V4-12	UPS 24V for PCSS, AZ8.1 and AZ8.2	/
M1-51/52	Carter Lamp	L5.1
M1-53/54	Muting Red Led	L5.2
M1-55	Internal Lamp	L5.3
M1-56	Lubrification Unit	ILC-MAX
M1-57	Out of grease signal	
M1-58	Grease Distributor	PX5.1
M1-71	Clamping Selector	S7.1
M1-72/73	Clamping Load Valve	EV7.2
M1-74	Clamping Trasductor	TRS7.1
M1-81/82	Y1 Motor Brake	RDZ8.1
M1-83/84	Y2 Motor Brake	RDZ8.2
M1-85/86	Y1 Motor Thermal Pad	/
M1-87/88	Y2 Motor Thermal Pad	/
M1-111	High Ram Proximity	PX11.1/11.2
M1-112	Green Led Cover	L11.1
M1-113	Pedalboard Up Movement	PS11.1
M1-121	Enable From Motors Brakes	BRK8.1/8.2
M1-122	Offset Circuit	PX12.1/12.2
M1-131	Emergency Offset Circuit	PX13.1/13.2
M1-141/142	Left Gate	FC13.1
M1-143/144	Right Gate	FC13.2
M1-145/146	Rear Gate Circuit	FC13.3/13.4
M1-147/149	Emergency Pushbutton CH1	KE14.1/14.2
M1-148/1410	Emergency Pushbutton CH2	KE14.1/14.2
M1-1411	Operating Light on CN	L14.1
M1-151	Pedalboard Active Light	L15.1
M1-152	Safety Accumulator Pressure Switch	PR15.1
M1-153	Emergency High Ram Proximity	PX15.1/15.2
M1-154	Low Ram Proximity	PX15.3/15.4
M1-161/162	Panic Pedal CH1	KP16.1/16.2
M1-163/164	Panic Pedal CH2	KP16.3/16.4
M1-165/166	NO Contact Down Movement	KP16.5/16.6
M1-167	NC Contact Down Movement	KP16.7/16.8
M1-168	NO Reset Contact on CN	P16.1
M1-169	NC Reset Contact on CN	P16.2
M1-1610	Rear Gate Reset Button	P16.3

Terminal Block M2		
M2-7	Selector and Unload Valve	S7.2/EV7.1
M2-11	High Ram Proximity	PX11.1/11.2
M2-12A	Enable From Motors Brakes	BRK8.1/8.2
M2-12B	Offset Circuit	FC12.1/12.2
M2-13	Emergency Offset Circuit	FC13.1/13.2
M2-14A	Emergency Pushbutton CH1	KE14.1/14.2
M2-14B	Emergency Pushbutton CH2	KE14.1/14.2
M2-15A	Emergency High Ram Proximity	PX15.1/15.2
M2-15B	Low Ram Proximity	PX15.3/15.4

BLM GROUP
Cartier Drive 46850
Novi, MI 48377
Tel. +1 (248) 560 0080
Fax +1 (248) 560 0083
E-mail: service@blmgroupusa.com
Site: www.blmgroup.com

Project: CN ESA - 420-200 TON
Commission: 04-2021 / PE0122 | Date: 20/04/2021 | Customer: BLM Group
Note: Wila Clamping - Wila Crowning - Double Pedalboard - LED Strip - Sheet Follower

THIS DIAGRAM IS OUR EXCLUSIVE PROPERTY AND IT CAN'T BE SHOWN OR COPIED TO THIRD PARTIES NEITHER IN ORIGINAL OR IN COPY WITHOUT OUR AUTHORIZATION (art: 1152-1158-1161 c.c.)

CABINET MATERIAL LIST

ITEM CODE	BRAND	DIAGRAM CODE
SD204/25	ABB	Q1.2 / Q1.3
LOVGAX66	LOVATO	Q1.1
LOVGAX60B	LOVATO	Q1.1
WVGAX7200A	LOVATO	Q1.1
LOV GA063A	LOVATO	Q1.1
LOVGAX84	LOVATO	Q1.1
LOVFB02A3P	LOVATO	F1.1
LOVFB01F3P	LOVATO	F2.1/ F2.2 / F2.3
LOVFB01F2P	LOVATO	F2.4/ F2.5
LOVPMV10A44	LOVATO	KSC3.1
LOVBF0910D024	LOVATO	K13.2/ K7.1/ K7.2/ K7.3
LOVBFX1031	LOVATO	K13.1
LOVBFX1011	LOVATO	K13.3/ K7.1/K7.2
LOVSM1P2500	LOVATO	RT1.1/ RT1.2
LOVSM1P0160	LOVATO	RT3.1/ RT3.2
LOV11SMX1211	LOVATO	RT1.1/ RT1.2/ RT3.1/RT3.2
LOVBF3200D024	LOVATO	K13.1/ K13.2
70000056-002	TECNOCABLAGGI	IND1.1
91001500-085	TECNOCABLAGGI	TR2.1
CFM00160CC15	ITALWEBER	TR2.2
SD175SAP24HWB	EXOM	
MG154	EXOM	
F150MR	EXOM	
XGNF3035CG	EXOM	
FN3270H-50-34	SCHAFFNER	FLR1.1
Expansion Adapter Module	LAZERFAFE	EXP17.1
PCSS-A	LAZERFAFE	PCSS
S 640N.R174	ESA UTOMOTION	RACK-ESA
AZM.005.500	ESA UTOMOTION	AL6.1
WD 7760056364	WEIDMULLER	K9.1 / K9.2
WD 7760056315	WEIDMULLER	K9.1 / K9.2
WD 7760056362	WEIDMULLER	K11.1 / K11.2 / K15.1
WD 7760056069	WEIDMULLER	K11.1 / K11.2 / K15.1
WD 7760056097	WEIDMULLER	
WD 7760056363	WEIDMULLER	
WD 1122880000	WEIDMULLER	K4.1-2-3-4 / K8.2-4 / K10.1 / K12.1-2 / K13.3
WD 4060120000	WEIDMULLER	K4.1-2-3-4 / K8.2-4 / K10.1 / K12.1-2 / K13.3
WD 7760056015	WEIDMULLER	
WD 1469550000	WEIDMULLER	AL4.1
WD 1370050010	WEIDMULLER	AL4.2/ AL4.3
WD 1406930000	WEIDMULLER	BAT4.2/ BAT4.3
WD 2434340000	WEIDMULLER	Terminal Block
WD 1547610000	WEIDMULLER	Terminal Block
WD1547650000	WEIDMULLER	Terminal Block
WD 1547680000	WEIDMULLER	Terminal Block
WD 249400000	WEIDMULLER	Terminal Block
WD 2494010000	WEIDMULLER	Terminal Block
WD 1527620000	WEIDMULLER	Terminal Block
WD 1527980000	WEIDMULLER	FE4.1
WD 2081880000	WEIDMULLER	FE4.1
WD 2080880000	WEIDMULLER	FE4.1
WD 2080920000	WEIDMULLER	FE4.1
WD 1252530000	WEIDMULLER	
WD 2486080000	WEIDMULLER	DR4.1
OPDE B-1IOA	TDEMACNO	AZ8.1 / AZ8.2
ELCM021	D&D ELETTRONICA	ILF5.1
PCAOOPI	GS. ELETTROMECCANICA	KP16.1-2-3-4
KXBS11	LOVATO	KP16.3 / KP16.4
KXBS02	LOVATO	KP16.1 / KP16.2
FAK-S/KC11/1	EATON	PS11.1
E21PERZ4531	PIZZATO	KE14.1 / KE14.2
E21PU2R2210	PIZZATO	P16.1 / P16.2 / P16.3
E21SU2AV061AB	PIZZATO	
E21SUIAVD41AB	PIZZATO	S7.1 / S7.2

BLM GROUP
Cartier Drive 46850
Novi, MI 48377
Tel. +1 (248) 560 0080
Fax +1 (248) 560 0083
E-mail: service@blmgroupusa.com
Site: www.blmgroup.com

Project: CN ESA - 420-200 TON
Commission: 04-2021 / PE0122 | Date: 20/04/2021 | Customer: BLM Group
Note: Wila Clamping - Wila Crowning - Double Pedalboard - LED Strip - Sheet Follower

THIS DIAGRAM IS OUR EXCLUSIVE PROPERTY AND IT CAN'T BE SHOWN OR COPIED TO THIRD PARTIES NEITHER IN ORIGINAL OR IN COPY WITHOUT OUR AUTHORIZATION (art: 1152-1158-1161 c.c.)

CABINET MATERIAL LIST		
ITEM CODE	BRAND	DIAGRAM CODE
E21SC2DV A11AE	PIZZATO	S15.1
E61IL1A2110	PIZZATO	L15.1
E61IL1A4110	PIZZATO	L11.2
VEDL1A5A09	PIZZATO	KE14.1 / KE14.2
E2LP1 A4V1	PIZZATO	S7.1 / S7.2
E21BAC1J	PIZZATO	
VEGP12H1A	PIZZATO	
E21USB1AN0.8	PIZZATO	
E21RJ451AAK	PIZZATO	
E21TA1A110	PIZZATO	
E2CP10G2V1	PIZZATO	
E2CP01G2V1	PIZZATO	
IS1679	HEIDENHAIN	
HPR200010R	I.R.E.	RF8.1 / RF8.2
BEG-561-255-030	INTORQ	RDZ8.1 / RDZ8.2
3000249-08/19	HYDAC	EV7.1 / EV7.2
PU5402	IFM	TRS7.1
SFA	ATB - MOTORS	M3.1
BES-M08EE-POC15B	BALLUFF	PX11.1-2 / PX12.1-2 / PX13.1-2
CFSW.110-6-2NO+2NC	ELESA	FC14.1 / 14.2 / 14.3 / 14.4
SACC-M12FS-8CON-PG9-M	PHOENIX CONTACT	FC14.1 / 14.2 / 14.3 / 14.4
XZCP0666L 5	XZCP0666L5	PX11.1-2 / PX12.1-2 / PX13.1-2
40-2-24DC-FST-G	ILC	ILC5.1
MTRI 500-450-075-470-1380-750 SP UM	UNIMEC	M8.1 / M8.2
BFK458-14N	INTORQ	BRK8.1 / BRK8.2
IBO02587	BOCCHIOTTI	
160 02585	BOCCHIOTTI	
/60 02582	BOCCHIOTTI	
/BO 00846	BOCCHIOTTI	

SFTP Crossover 10m Molded	INTELLINET	LAN 1
FTP 10m Molded	INTELLINET	LAN 2
FS17 DOP:0440	GENERALCAVI	
FS17 DOP:0440	GENERALCAVI	
FS17 DOP:0440	GENERALCAVI	
FS17 DOP:0440	GENERALCAVI	
FS17 DOP:0440	GENERALCAVI	
FS17 DOP:0440	GENERALCAVI	
FS17 DOP:0440	GENERALCAVI	
FS17 DOP:0440	GENERALCAVI	
FS17 DOP:0440	GENERALCAVI	
FS17 DOP:0440	GENERALCAVI	
H05V-K	GENERALCAVI	
FR20HH2R	BERICA CAVI	
CF240.02.08	IGUS CHAINFLEX	
18001868	BOCCHIOITI	
18001848	BOCCHI OITI	
OR 00026	AGENCAVI	
OR 00027	AGENCAVI	
OR 00028	AGENCAVI	
OR 00029	AGENCAVI	
OR00031	AGENCAVI	
OR00032	AGENCAVI	
OR00033A	AGENCAVI	
OR00035B	AGENCAVI	
OR00052	AGENCAVI	
ORSH1123A	AGENCAVI	

BLM GROUP
Cartier Drive 46850
Novi, MI 48377
Tel. +1 (248) 560 0080
Fax +1 (248) 560 0083
E-mail: service@blmgroupusa.com
Site: www.blmgroup.com

Project: CN ESA - 420-200 TON
Commission: 04-2021 / PE0122 | Date: 20/04/2021 | Customer: BLM Group
Note: Wila Clamping - Wila Crowning - Double Pedalboard - LED Strip - Sheet Follower

THIS DIAGRAM IS OUR EXCLUSIVE PROPERTY AND IT CAN'T BE SHOWN OR COPIED TO THIRD PARTIES NEITHER IN ORIGINAL OR IN COPY WITHOUT OUR AUTHORIZATION (art: 1152-1158-1161 c.c.)

ITEM ID	QTY	MODEL CODE	DESCRIPTION	MANUFACTURER
1	1	E60303028	SERBATOIO 5L	HYDRONIT
2	1	TSF-12	TAPPO CARICA OLIO CON FILTRO ARIA 1/2"	MISELLI
3	1	E60104020	CORPO UNIVERSALE A 3 CAVITÀ	HYDRONIT
4	1	EK1PD2G	POMPA INGRANAGGI EK1PD2G	MARZOCCHI
5	1	HP05004PB14	M.EL.HP 0,5 KW 0,37 4P B14 230/400 50/60HZ IE1	ELDRIVE
6	1	0T.M1.01-03-99-20	VALVOLA MASSIMA PRESSIONE - 0T.M1.01-03-99-20	BOSCH REXROTH
7	1	VRO-S08-01-005-N	VALVOLA DI NON RITORNO SAE 8-2 VRO-S08-01-005-N	2MP
8	1	WI7545569	MANOMETRO D63 RAD. 1/4" 0÷100BAR	WIKA
9	1	SMD-20-G1/4-B-OR-W3	ADATTATORE MANOMETRO	STAUFF
10	1	E60403004	BLOCCO DISTANZIALE	HYDRONIT
11	1	Z12HPZ9EET1501-K	MASSELLO 2 SAE08-02	P SERVICE
12	1	WS08W01CN24DG	ELETTROVALVOLA A CARTUCCIA WS08W-01-C-N-24DG	HYDAC
13	2	SMK20G18PC	MINIPRESA G1/8"	STAUFF
14	1	WS08ZR01MCN24DG	ELETTROVALVOLA A CARTUCCIA COMANDO MANUALE	HYDAC
15	1	PU5402	TRASDUTTORE PRESSIONE 0÷100 BAR 0÷10 V 1/4"	IFM

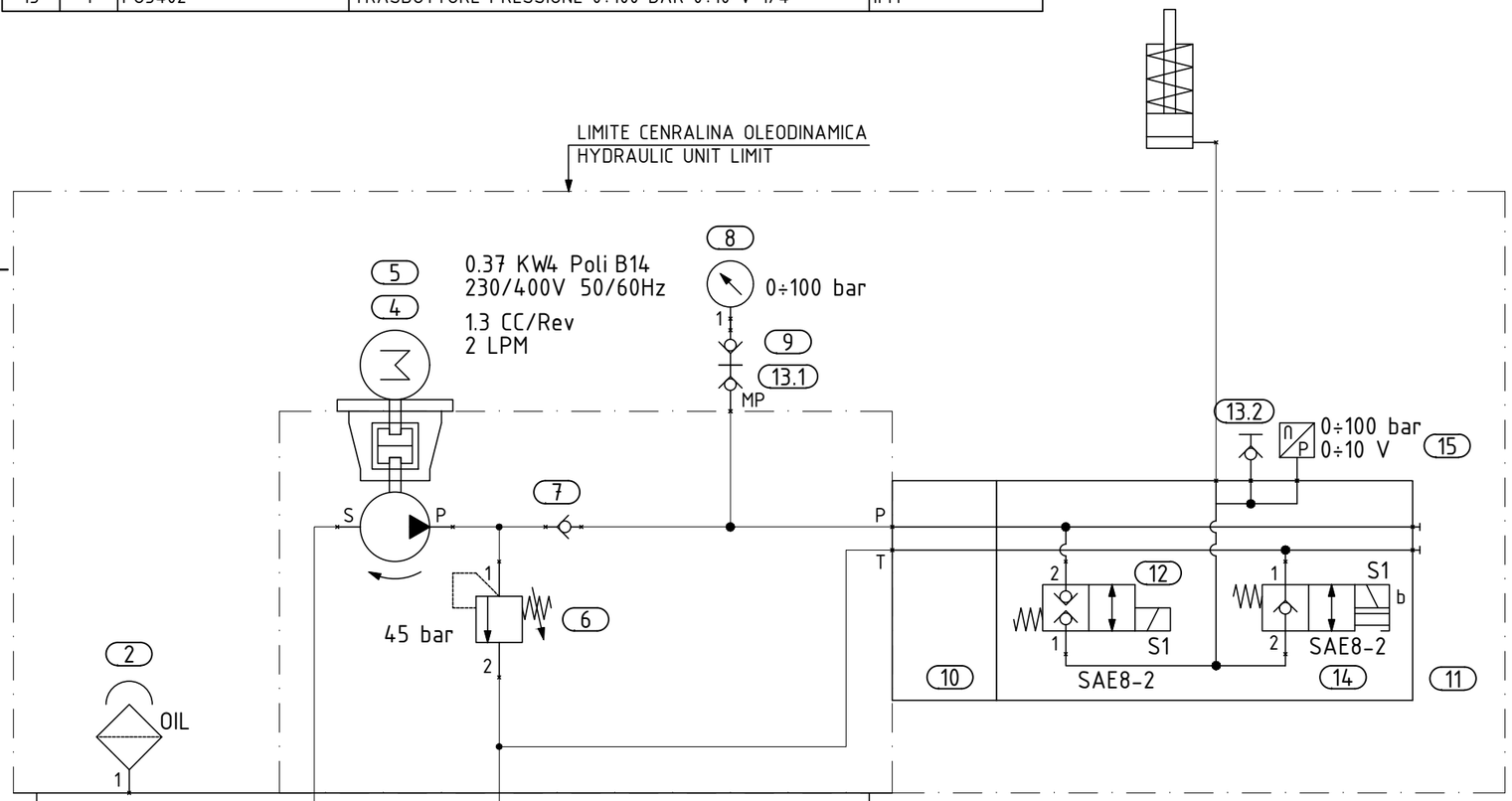

STACCA P2=45bar
RIATTACCA P1=30bar
ALLARME P0=20bar

FLUIDO OLIO MINERALE HLP46 (DIN51524 PART. 2-3)
FLUID MINERAL OIL HLP46 (DIN51524 PART. 2-3)

Rev.	Data	Descrizione Revisione *Revision Description*	Drawn by	Cheked/Approved by
00	16/03/2018	EMISSIONE INIZIALE FIRST ISSUE	Bonometti	Benini

P Service S.r.l.
Via del Mella, 37
Z.I. Fornaci - 25131 (BS)
Tel. 030 35 855
Fax 030 35 81 256
pservice.bs@pservice.it
www.pservice.it

Titolo *Title*
SCHEMA OLEODINAMICO
PSBG-COM.SINGOLA PINZA-STR
HYDRAULIC DIAGRAM
Z12HPMCRPBG180002

Formato Format: ISO ESPANSO A3 (297 X 420 MM)
Scala *Scale*: #####
Codice SAP *Code*: Z12HP
Foglio Nr. *Sheet*: ####
Macchina *Machine*: Z12HPMCRPBG180002
Fogli Tot. Sheets: ####
Peso Weight [kg]
Materiale Material
Unquoted Radius [mm]
Unquoted Bevels [mm]
Tolleranze Generali General Tolerances: UNI EN ISO 2768-1 m - UNI EN ISO 22768-2 K - UNI EN ISO 8015 CCG
Rugosità *Machining*: √[√√√√√]
Trattamento *Treatment*

File Name: sch_mcrpbg180002.dwg

According to law P service Srl considers this document to be a company secret and therefore prohibits any person to reproduce or disclose it or make it known in whole or in part to other parties or to competitors without specific written authorization of P service's Management.