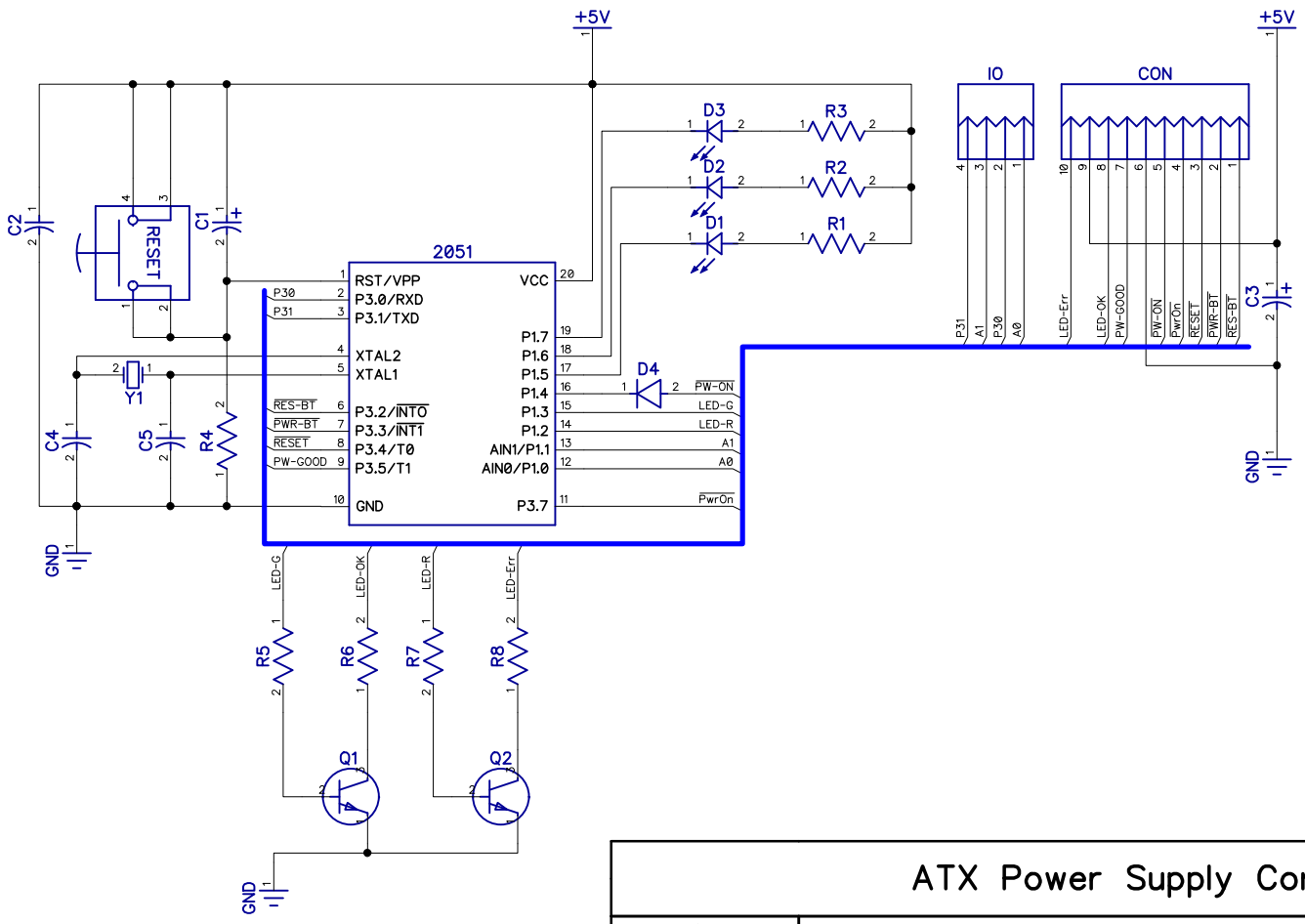

#	RefDes	Name	Value
1	2051	AT89C2051_DIP20	
2	C1	POLCAP	1uF
3	C2	CAP100	100nF
4	C3	POLCAP	1uF
5	C4	CAP100	30pF
6	C5	CAP100	30pF
7	CON	ATX_CTRL	
8	D1	LED-3R_Red	3mm Round
9	D2	LED-3R_Yellow	3mm Round
10	D3	LED-3R_Green	3mm Round
11	D4	DIODE	1N4148
12	IO	HDR-2x2	
13	Q1	BC337	
14	Q2	BC337	
15	R1	RES	1k
16	R2	RES	1k
17	R3	RES	1k
18	R4	RES	10k
19	R5	RES	1k
20	R6	RES	1k
21	R7	RES	1k
22	R8	RES	1k
23	RESET	B3F-1000	
24	Y1	ECS-10-13-1	12MHz

ATX Power Supply Controller for FDD X

Size A4	Number: 1	Revision: 0
Date: 2023-04-24	Sheet 1	
ATXctrl.dch	Drawn by: pear	