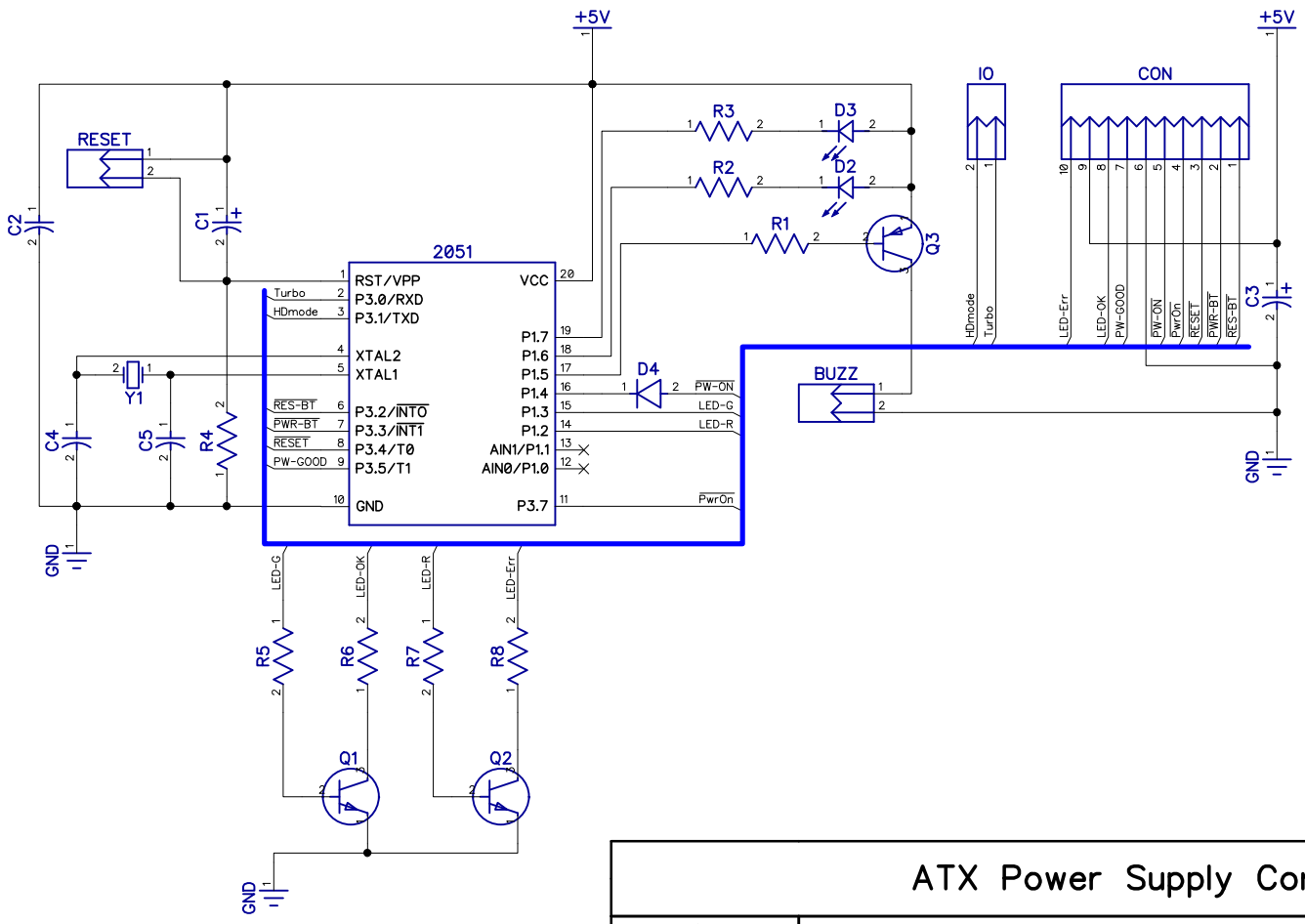

#	RefDes	Name	Value
1	2051	AT89C2051_DIP20	
2	BUZZ	HDR-1x2	
3	C1	POLCAP	1uF
4	C2	CAP100	100nF
5	C3	POLCAP	1uF
6	C4	CAP100	30pF
7	C5	CAP100	30pF
8	CON	ATX_CTRL	
9	D2	LED-3R_Yellow	3mm Round
10	D3	LED-3R_Green	3mm Round
11	D4	DIODE	1N4148
12	IO	HDR-1x2	
13	Q1	BC337	
14	Q2	BC337	
15	Q3	BC327	
16	R1	RES	10k
17	R2	RES	1k
18	R3	RES	1k
19	R4	RES	10k
20	R5	RES	1k
21	R6	RES	1k
22	R7	RES	1k
23	R8	RES	1k
24	RESET	HDR-1x2	
25	Y1	ECS-10-13-1	2MHz

ATX Power Supply Controller for FDD X

Size A4	Number: 1	Revision: 0
Date: 2023-04-24	Sheet 1	
ATXctrl.dch	Drawn by: pear	