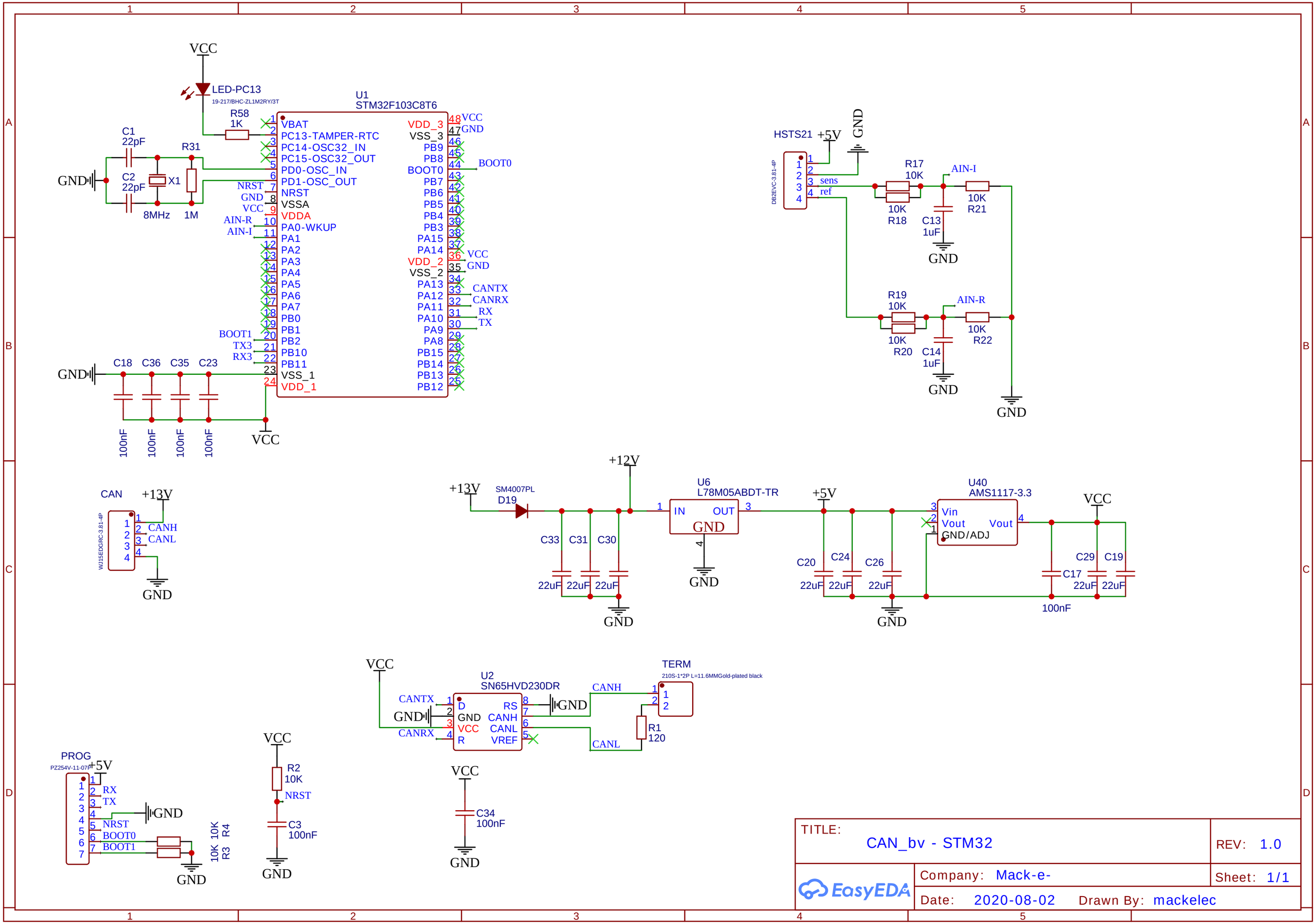

TITLE: CAN_bv - STM32

REV: 1.0

Company: Mack-e-

Sheet: 1/1

Date: 2020-08-02

Drawn By: mackelec

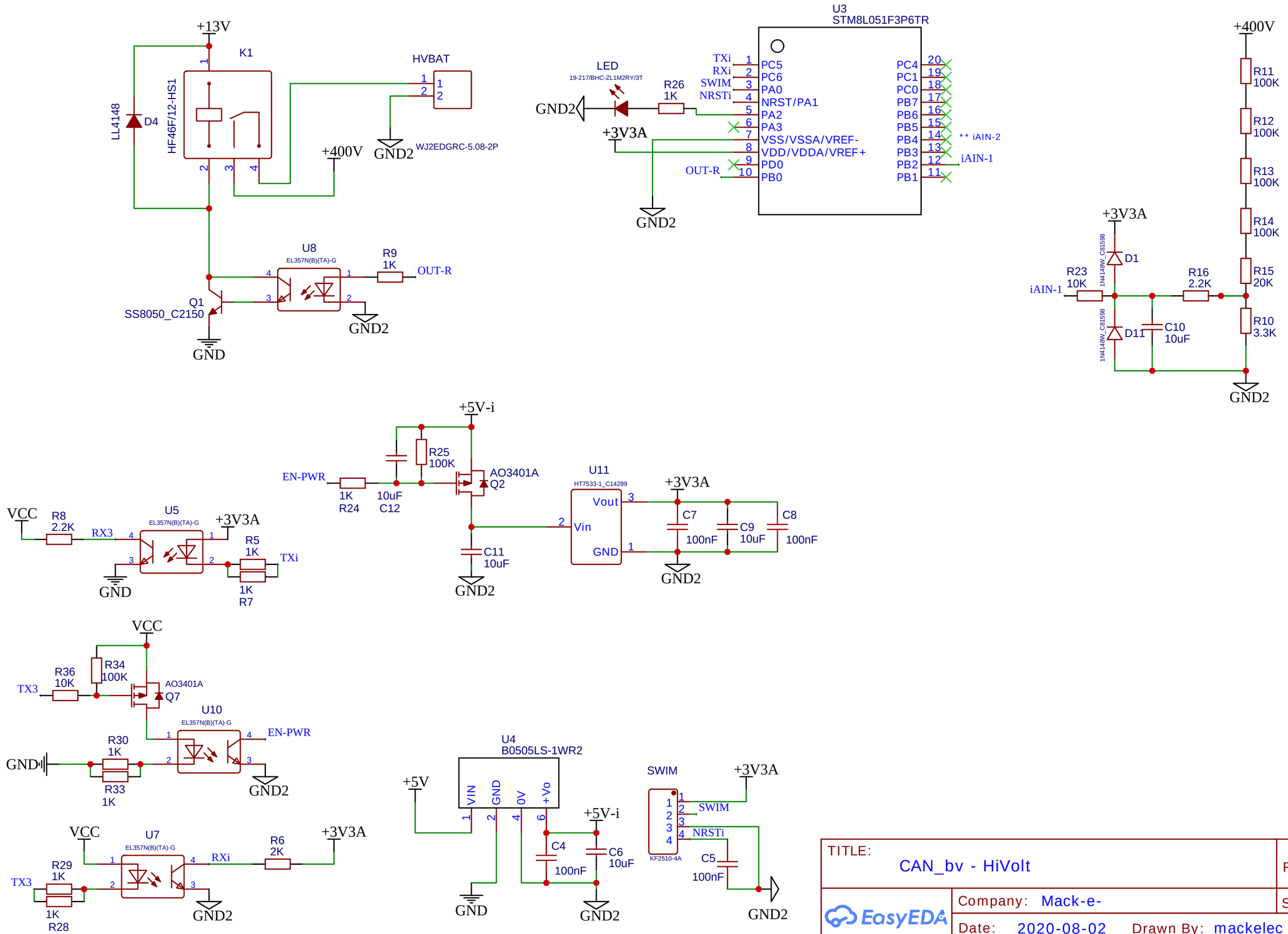

TITLE: CAN_bv - HiVolt	REV: 1.0
Company: Mack-e-	Sheet: 1/1
Date: 2020-08-02 Drawn By: mackelec	

EasyEDA