MĚŘENÍ

ÚLOHA Č.1 - MĚŘENÍ NA DIODÁCH

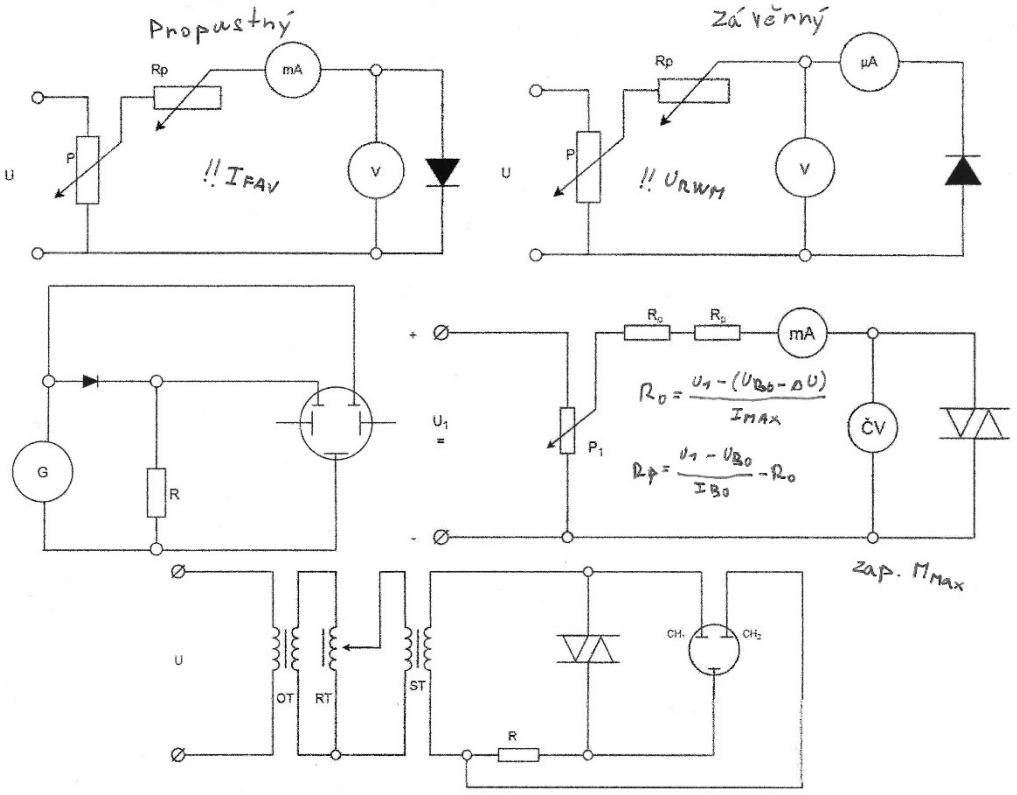

ÚLOHA Č.2 – BIPOLÁRNÍ TRANZISTOR

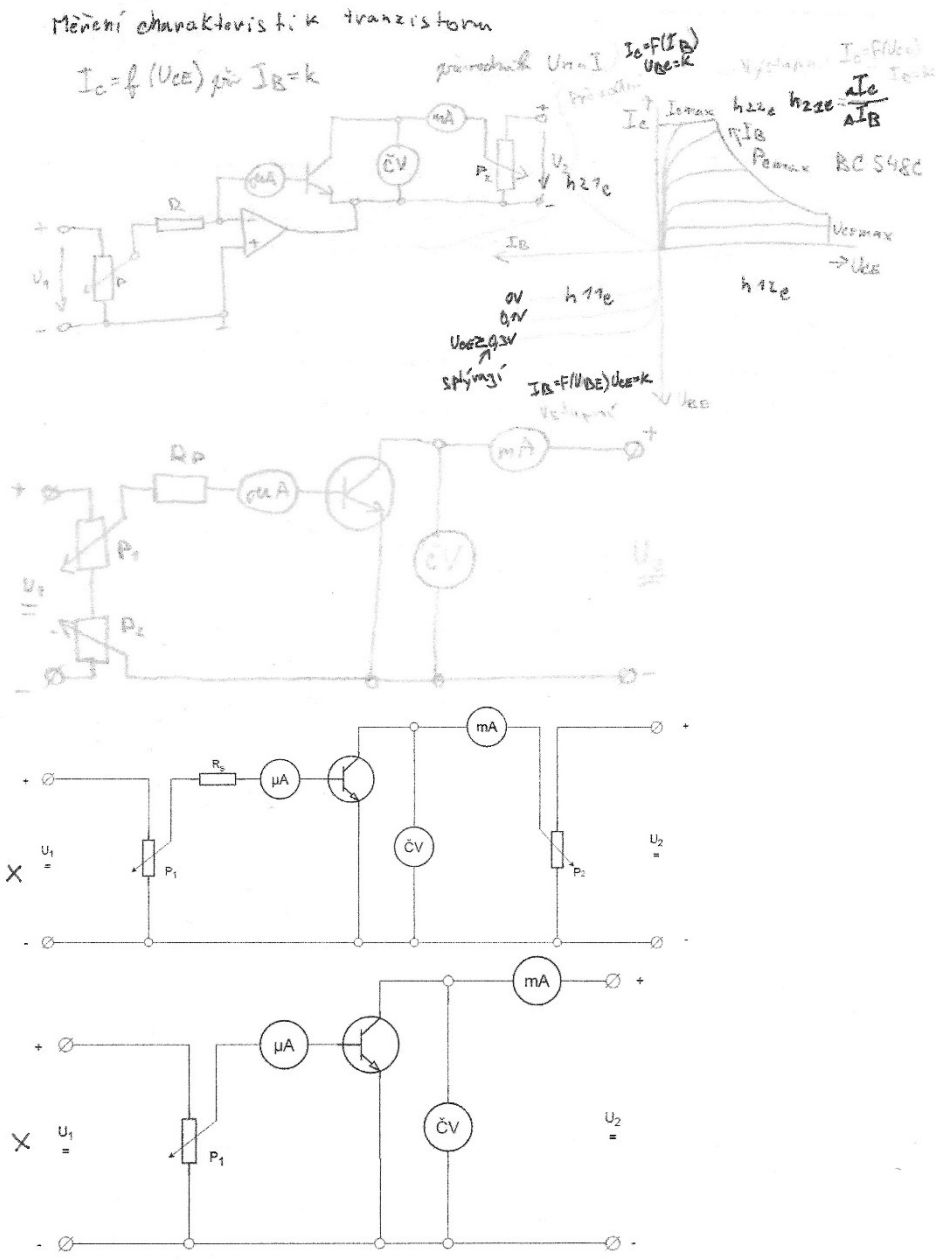

ÚLOHA Č.3 – FOTOSOUČÁSTKY

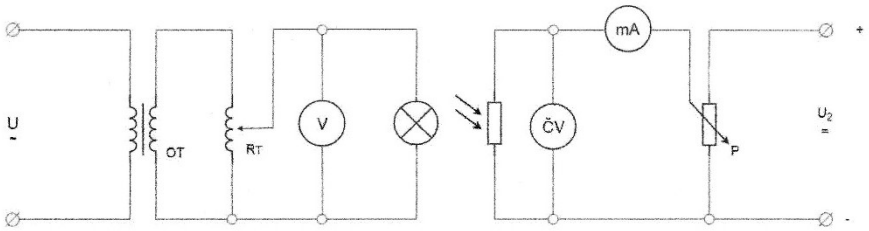

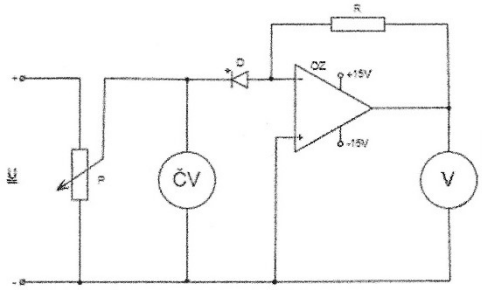

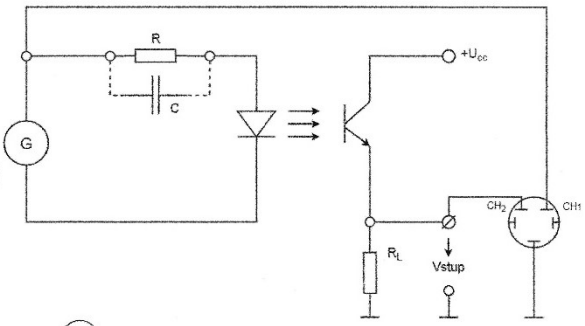

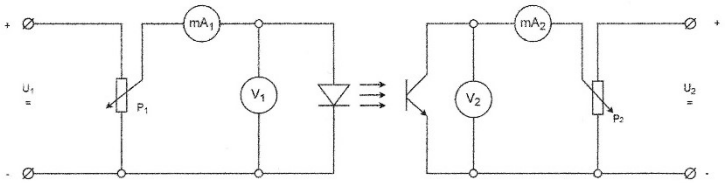

Měření na fotoprvcích

Fotodioda

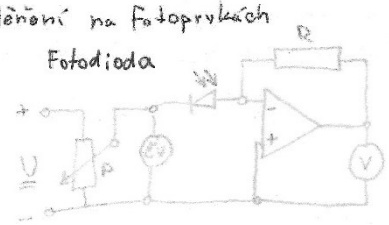

$R = \frac{U}{I} = \frac{12}{24 \cdot 10^{-6}}$

(mezi inv. vstupem a výstupem)

Fotoodpor

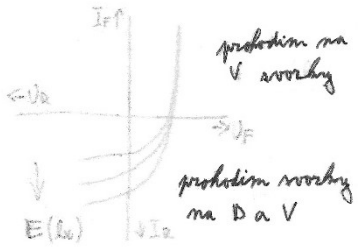

procházím na V závorky

procházím závorky na D a V

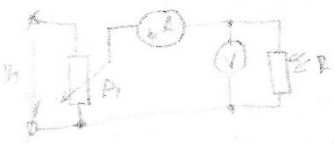

ÚLOHA Č.4 – OPERÁKY

a)

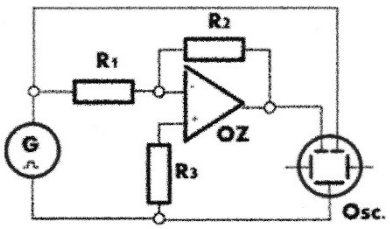

b)

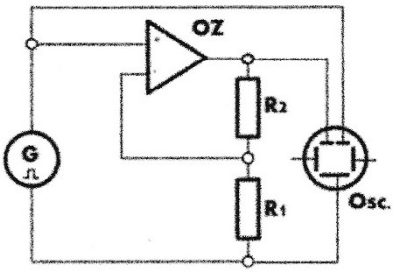

c)

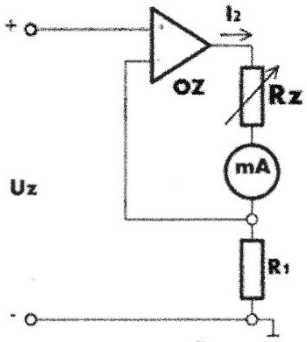

d)

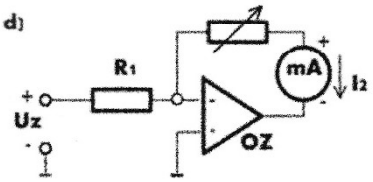

a) $R_1 = \frac{R_2}{A_u}$

$R_3 = \frac{R_2 \times R_1}{R_2 + R_1}$

$A_u = \frac{U_2}{U_1}$

b) $R_1 = \frac{R_2}{A_u - 1}$

$A_u = \frac{U_2}{U_1}$

c) $R_1 = \frac{U_{VST}}{I_2}$

$R_{2MAX} = \frac{U_{2MAX}}{I_2} - R_1$

↑ dolní hranice rozsahu

d) $R_1 = -\frac{U_{VST}}{I_2}$

$R_{2MAX} = \frac{U_{2MAX}}{I_2}$

→ —11—

ÚLOHA Č.5 – STABILIZÁTOR + EL. ZÁTĚŽ

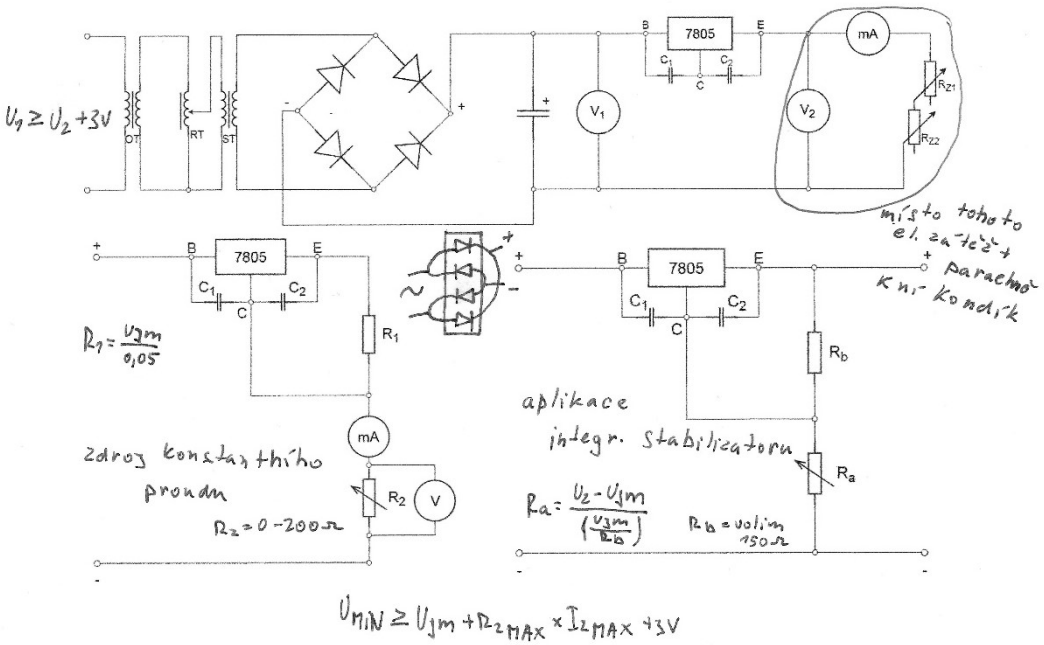

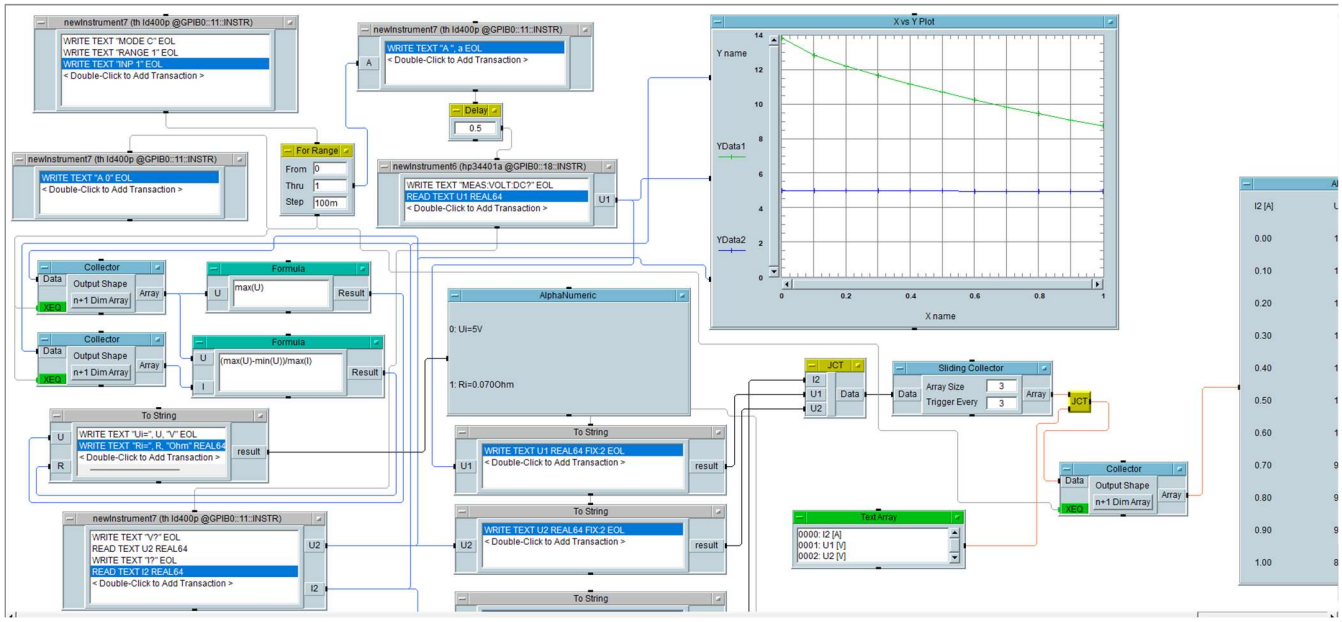

ÚLOHA Č.6 – MODEL OHMETRU

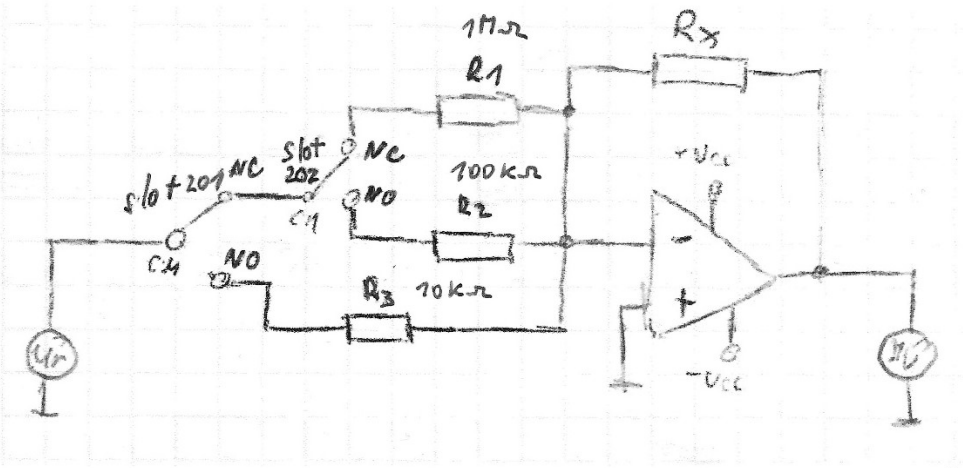

$$R_N = \frac{U_{REF}}{1V} \cdot R_x$$

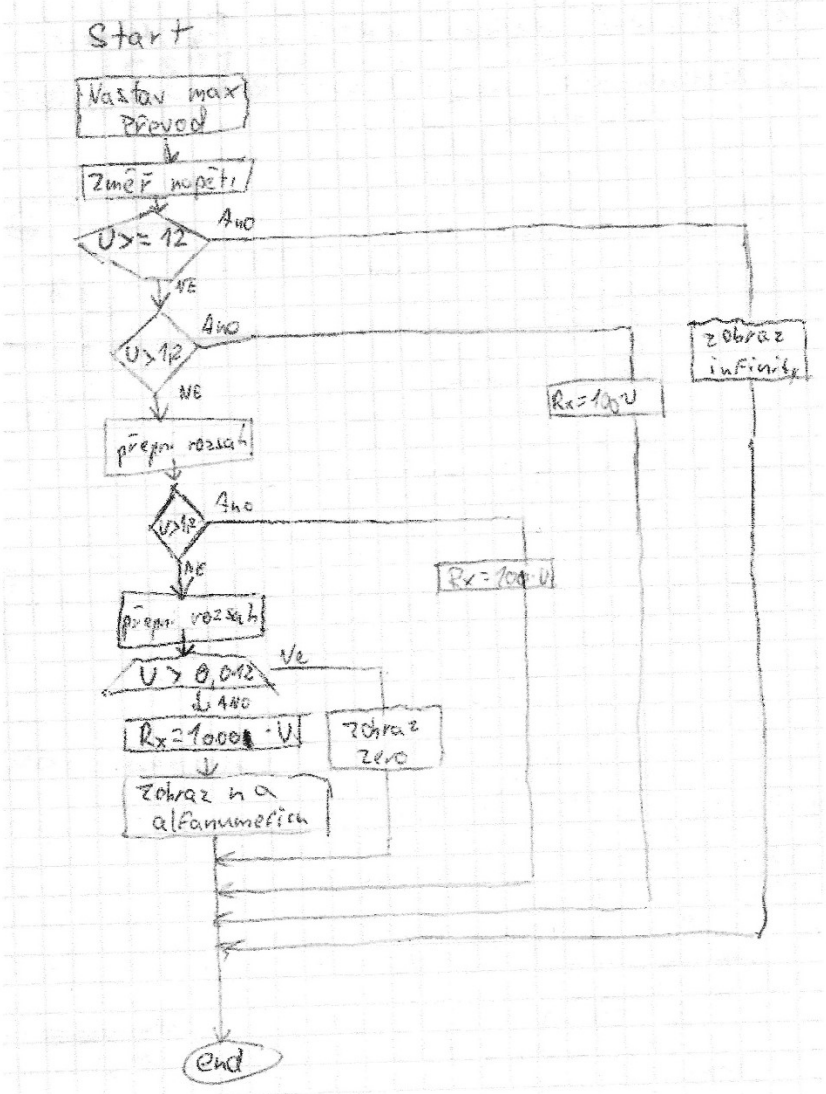

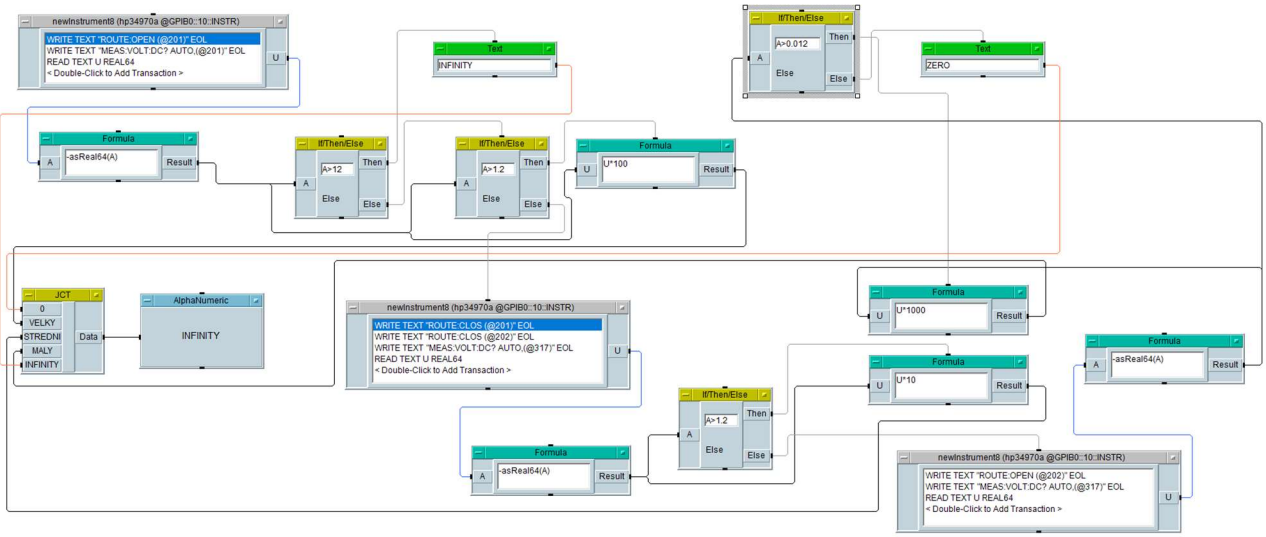
newInstrument8 (hp34970a @GPIB0::10::INSTR)
WRITE TEXT "ROUTE:OPEN (@201)" EOL
WRITE TEXT "MEAS:VOLT:DC? AUTO,(@201)" EOL
READ TEXT U REAL64
< Double-Click to Add Transaction >
U
Text
INFINITY
If/Then/Else
A>0.012
Then
Else
Text
ZERO
Formula
A
-asReal64(A)
Result
If/Then/Else
A>12
Then
Else
If/Then/Else
A>1.2
Then
Else
Formula
U
U*100
Result
JCT
0
VELKY
STREDNI
MALY
INFINITY
Data
AlphaNumeric
INFINITY
newInstrument8 (hp34970a @GPIB0::10::INSTR)
WRITE TEXT "ROUTE:CLOS (@201)" EOL
WRITE TEXT "ROUTE:CLOS (@202)" EOL
WRITE TEXT "MEAS:VOLT:DC? AUTO,(@317)" EOL
READ TEXT U REAL64
< Double-Click to Add Transaction >
U
Formula
U*1000
Result
Formula
U*10
Result
Formula
-asReal64(A)
Result
If/Then/Else
A>1.2
Then
Else
Formula
-asReal64(A)
Result
newInstrument8 (hp34970a @GPIB0::10::INSTR)
WRITE TEXT "ROUTE:OPEN (@202)" EOL
WRITE TEXT "MEAS:VOLT:DC? AUTO,(@317)" EOL
READ TEXT U REAL64
< Double-Click to Add Transaction >
U

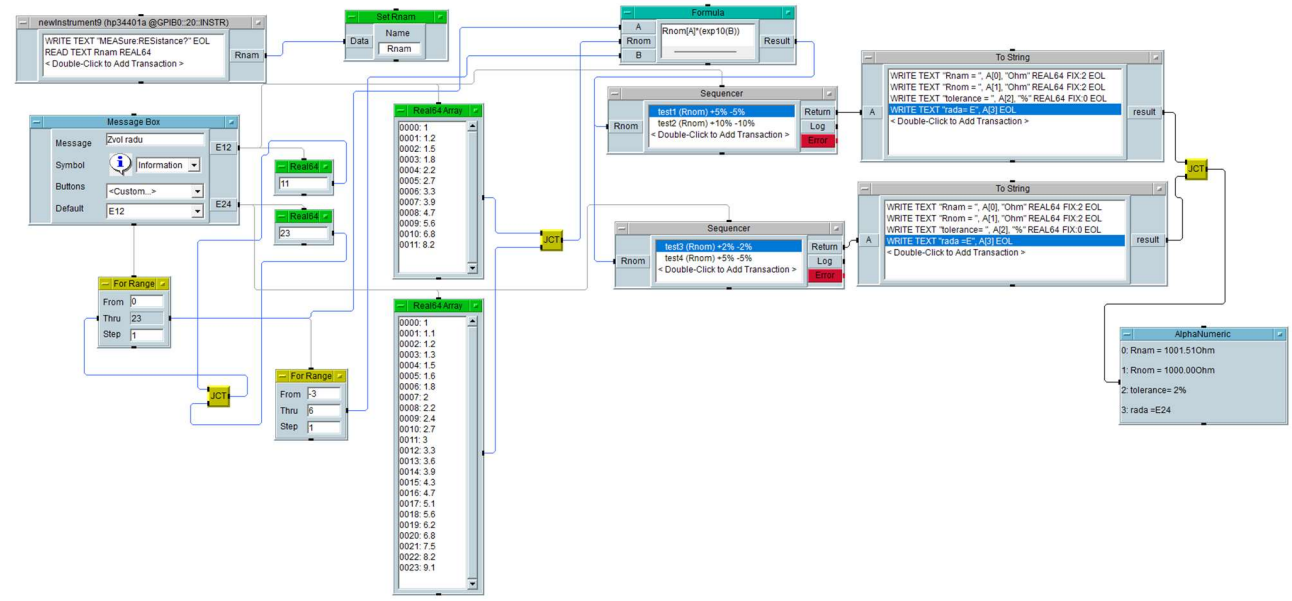
newInstrument9 (hp34401a @GPIB0::20::INSTR)
WRITE TEXT "MEASure:RESistance?" EOL
READ TEXT Rnam REAL64
< Double-Click to Add Transaction >
Rnam
Set Rnam
Data
Name
Rnam
Formula
A
B
Rnom
Rnom[A]*(exp10(B))
Result
Sequencer
Rnom
test1 (Rnom) +5% -5%
test2 (Rnom) +10% -10%
< Double-Click to Add Transaction >
Return
Log
Error
To String
WRITE TEXT "Rnam = ", A[0], "Ohm" REAL64 FIX:2 EOL
WRITE TEXT "Rnom = ", A[1], "Ohm" REAL64 FIX:2 EOL
WRITE TEXT "tolerance = ", A[2], "%" REAL64 FIX:0 EOL
WRITE TEXT "rada= E", A[3] EOL
< Double-Click to Add Transaction >
A
result
JCT
Message Box
Message
Zvol radu
Symbol
Information
Buttons
<Custom...>
Default
E12
E24
Real64
11
Real64
23
Real64 Array
0000: 1
0001: 1.2
0002: 1.5
0003: 1.8
0004: 2.2
0005: 2.7
0006: 3.3
0007: 3.9
0008: 4.7
0009: 5.6
0010: 6.8
0011: 8.2
JCT
Sequencer
Rnom
test3 (Rnom) +2% -2%
test4 (Rnom) +5% -5%
< Double-Click to Add Transaction >
Return
Log
Error
To String
WRITE TEXT "Rnam = ", A[0], "Ohm" REAL64 FIX:2 EOL
WRITE TEXT "Rnom = ", A[1], "Ohm" REAL64 FIX:2 EOL
WRITE TEXT "tolerance = ", A[2], "%" REAL64 FIX:0 EOL
WRITE TEXT "rada =E", A[3] EOL
< Double-Click to Add Transaction >
A
result
For Range
From 0
Thru 23
Step 1
JCT
Real64 Array
0000: 1
0001: 1.1
0002: 1.2
0003: 1.3
0004: 1.5
0005: 1.6
0006: 1.8
0007: 2
0008: 2.2
0009: 2.4
0010: 2.7
0011: 3
0012: 3.3
0013: 3.6
0014: 3.9
0015: 4.3
0016: 4.7
0017: 5.1
0018: 5.6
0019: 6.2
0020: 6.8
0021: 7.5
0022: 8.2
0023: 9.1
For Range
From -3
Thru 6
Step 1
JCT
AlphaNumeric
0: Rnam = 1001.51Ohm
1: Rnom = 1000.00Ohm
2: tolerance= 2%
3: rada =E24

ÚLOHA Č.7 – DIGITALNI A ANALOGOVÝ FILTR

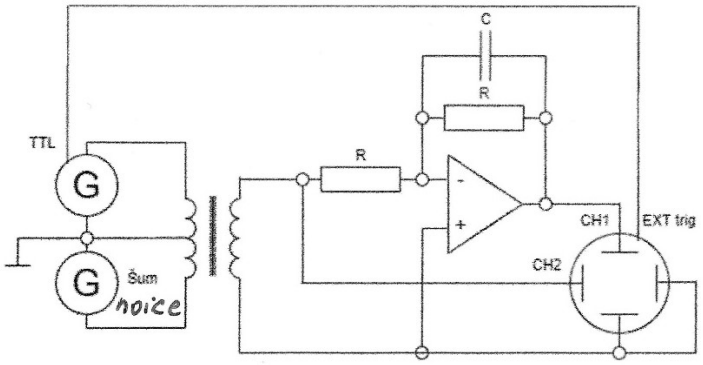

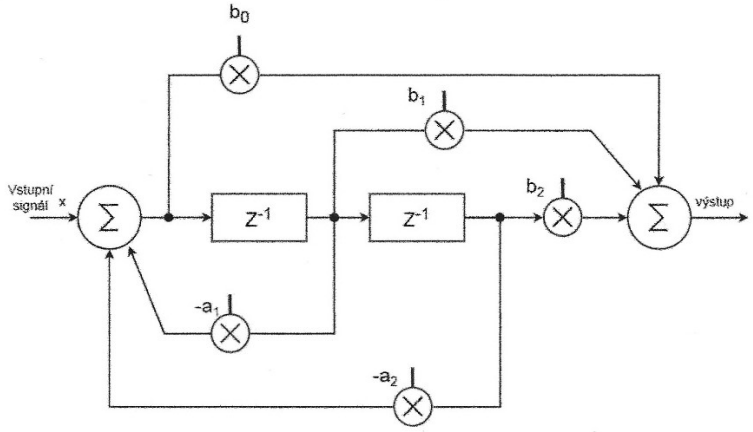

$$R = \frac{1}{2\pi FC}$$

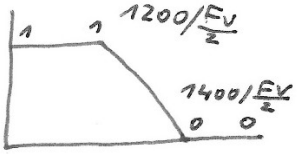

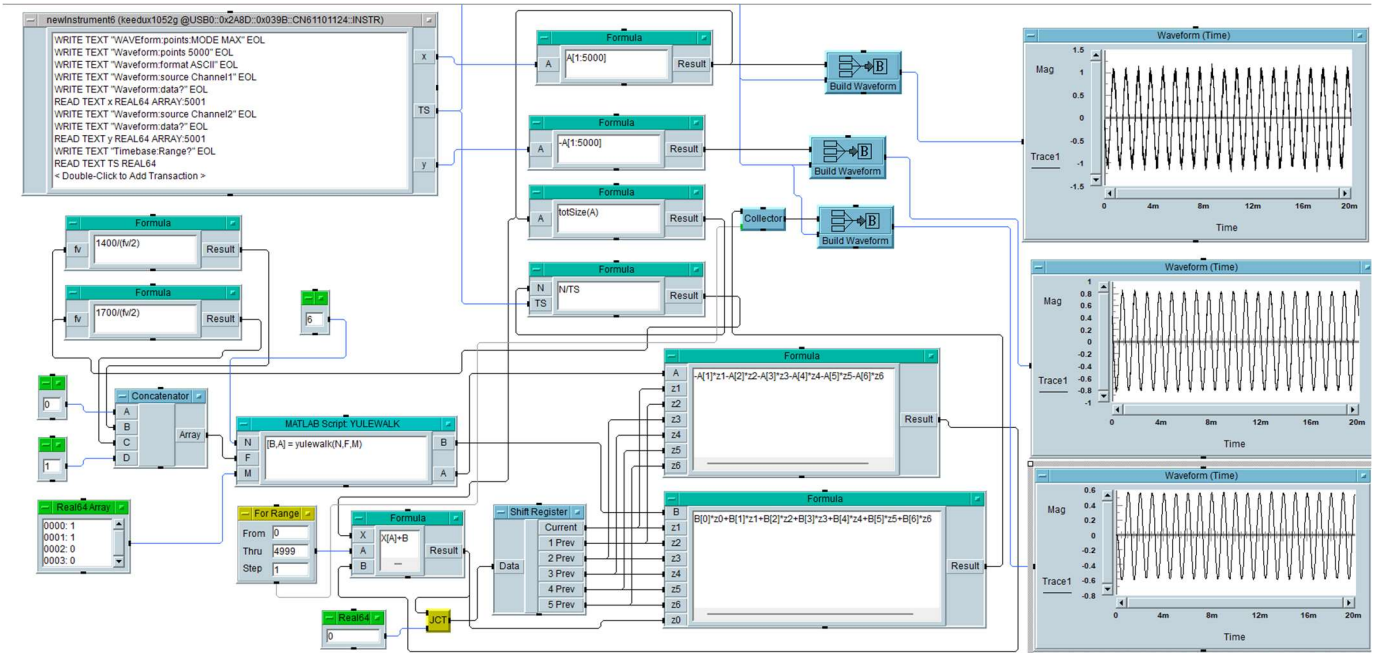

ÚLOHA Č.8 – TTL

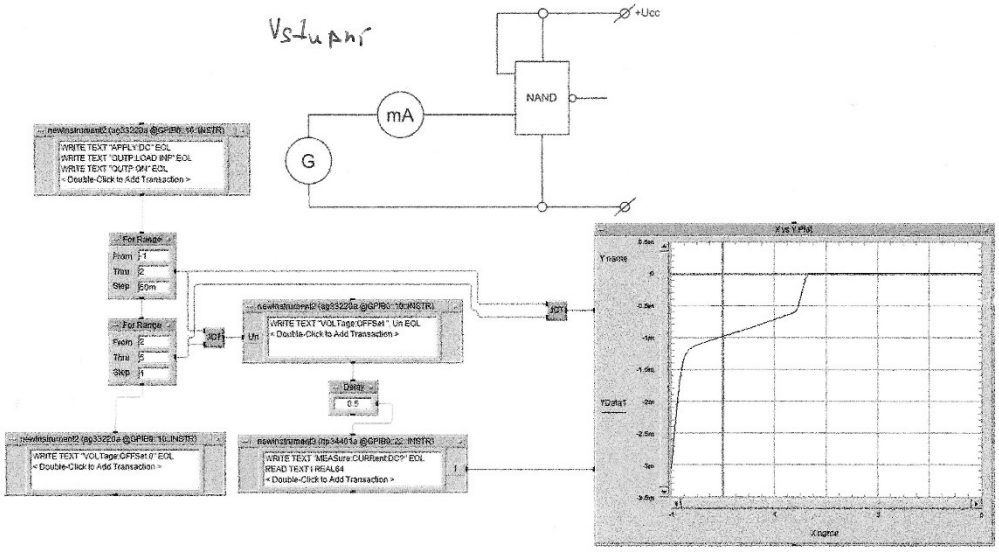
Vstupní
+Ucc
NAND
mA
G
WRITE TEXT "APPLY:DC" EOL
WRITE TEXT "OUTP:LOAD INF" EOL
WRITE TEXT "OUTP:ON" EOL
< Double-Click to Add Transaction >
For Range
From 1
Thru 2
Step 50m
For Range
From 2
Thru 5
Step 1
JCT
Un
WRITE TEXT "VOLTage:OFFSet " Un EOL
< Double-Click to Add Transaction >
Delay
0.5
WRITE TEXT "VOLTage:OFFSet:0" EOL
< Double-Click to Add Transaction >
WRITE TEXT "MEASure:CURRent:DC?" EOL
READ TEXT I REAL64
< Double-Click to Add Transaction >
X vs Y Plot
Y name
YData1
X name

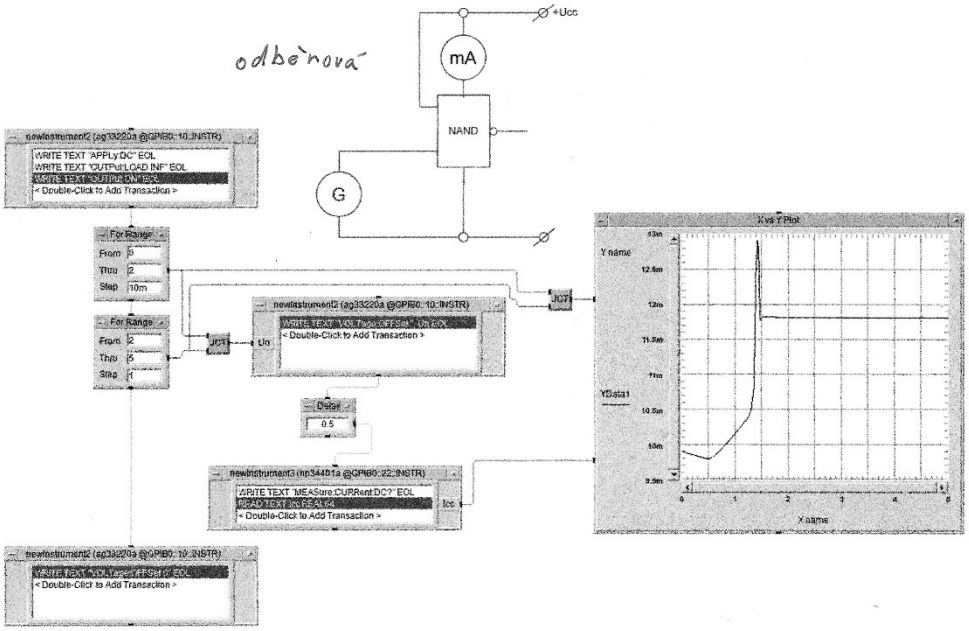
odběrová
+Ucc
mA
NAND
G
WRITE TEXT "APPLY:DC" EOL
WRITE TEXT "OUTPut:LOAD INF" EOL
WRITE TEXT "OUTPut:ON" EOL
< Double-Click to Add Transaction >
For Range
From 0
Thru 2
Step 10m
For Range
From 2
Thru 5
Step 1
JCT
Un
WRITE TEXT "VOLTage:OFFSet " Un EOL
< Double-Click to Add Transaction >
Delay
0.5
WRITE TEXT "MEASure:CURRent:DC?" EOL
READ TEXT Icc REAL64
< Double-Click to Add Transaction >
Icc
X vs Y Plot
Y name
YData1
X name

Převodník

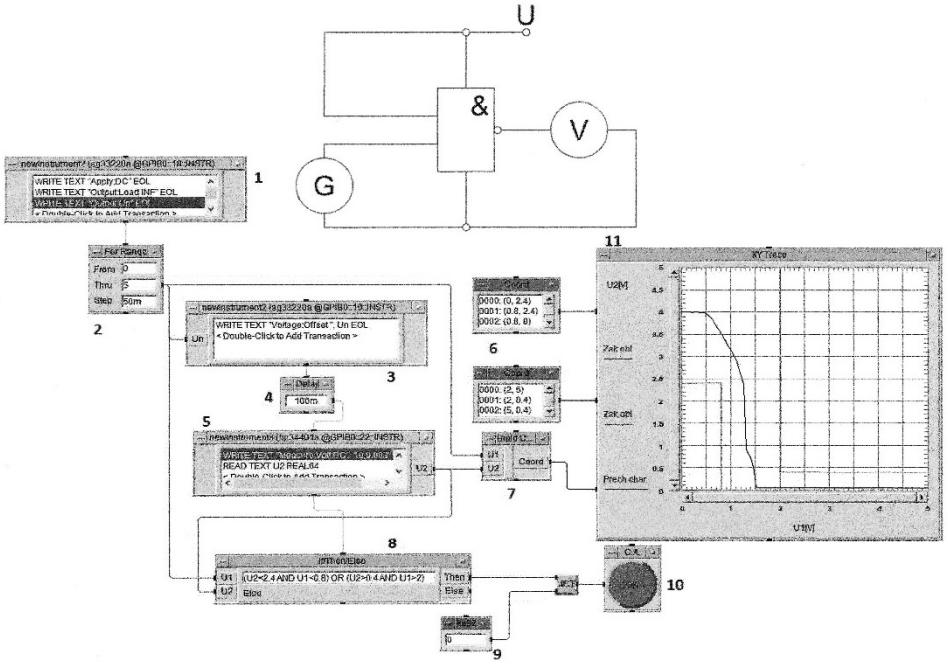

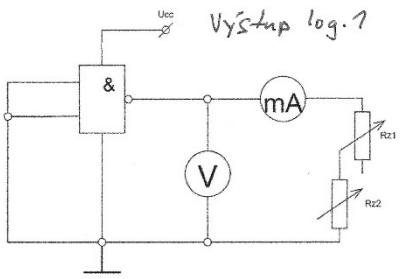

Výstup log. 1

$$I_k = \frac{U_{cc} - U_{FD1} - U_{CET3}}{R_4}$$

$$R_2 = \frac{U_0}{1mA}$$

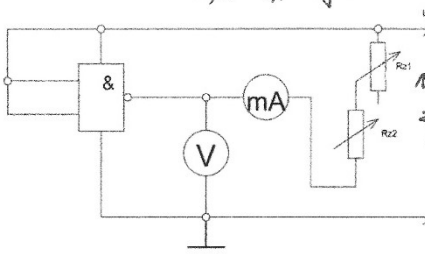

Výstup log 0

NESMÍME ZCELA VYŘÁDIT R_2

logický zisk $\Rightarrow N = \frac{I_{20}}{I_{2V}}$ - pro 0,4V

~1,6mA - katalog

ÚLOHA Č.9 – ZENEROVA DIODA

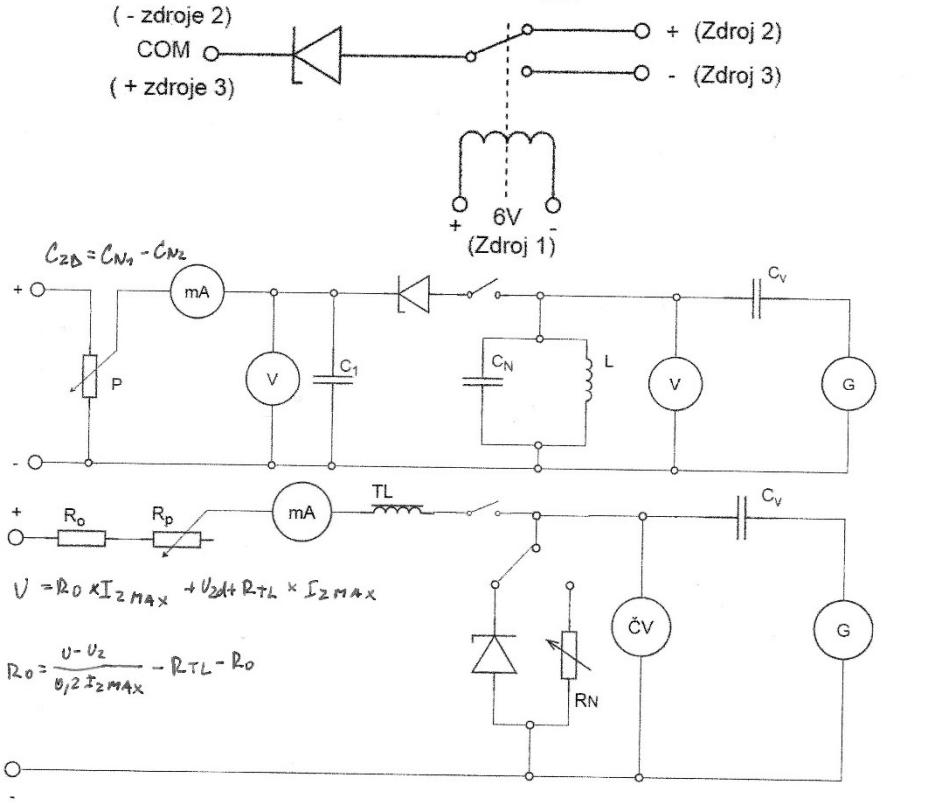

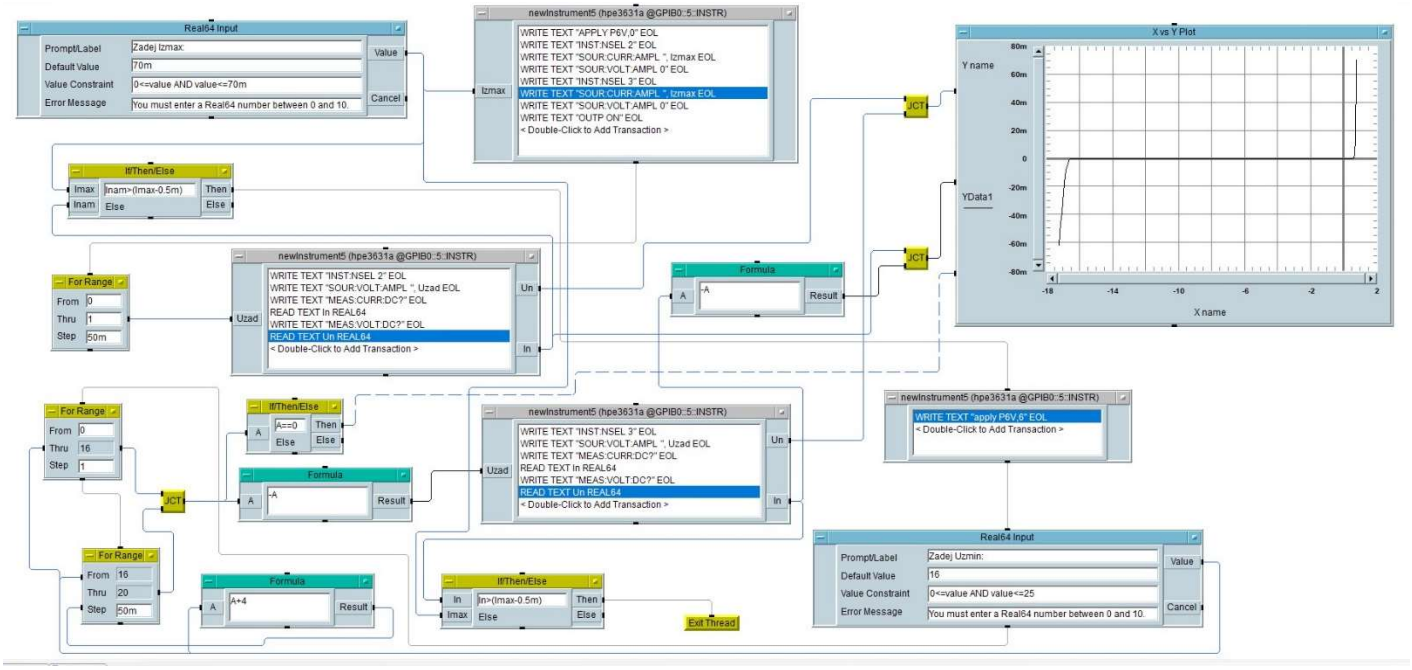

ACV

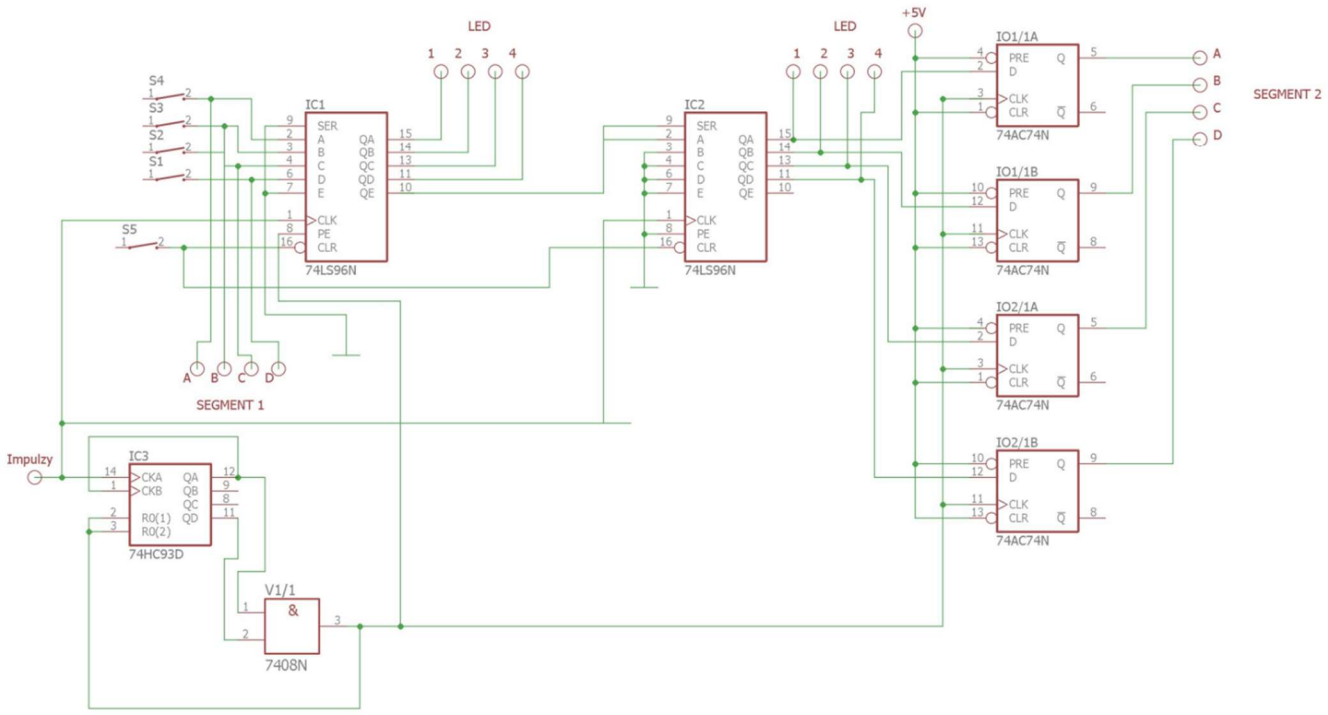

PLC Regulace

$e = w - y$ (kalib)

I reg.: $\%MW3 := (\%MW1/2) + \%MW3$

PI reg.: $\%MW10 := (6 \cdot \%MW3) - (15 * \%MW4) + \%MW5$

$e(k-1) = e(k)$

$u(k-1) = u(k)$

$y = kx + q$

I reg. $u(k) = r_1 \cdot T_{v2} \cdot e(k) + u(k-1)$

PI reg. $u(k) = (r_0 + r_1 \cdot T_{v2}) \cdot e(k) - r_0 \cdot e(k-1) + u(k-1)$

PWM (%MW1, %Q2.0, %MW50:5)

Log obvody

kodér/dekodér 46051 → 74435

čítač D 27041 → (posun) 70412

čítač JK 524176 → 241765

J → 1 a ne (0)

K → 0 a ne (1)