OVM.GLG High-strength (HS) Prestressing Thread Bar

LIUZHOU OVM MACHINERY CO., LTD.

www.ovm.cn

Nov.2014

Contents

Foreword 01

The Strength Grade Code 01

Design Reference of HS Thread Bar and Its Anchoring System 01

Design Index 02

Mechanical Properties of HS Thread Bar 02

Nominal Cross-section Area, Load Parameter & Weight 03

The Shape of HS Thread Bar 03

Anchoring System Components 04

Geotechnical (GT) Bar Solution 05

Tensioning Jacks 06

The Acceptance of HS Thread Bar 07

Construction Guide for HS Thread Bar 07

Construction Precautions 07

Applications 08

Foreword

The series of OVM GLG HS Thread Bars and its anchoring system are widely applied in PT and GT application field. Compared with traditional fine rebar, OVM GLG HS Thread Bar features improved performance in anchoring draw-in, fatigue properties, cohesive strength with concrete, etc.
A series of systematic customized stressing jack and accessories are developed to match to its installation. A long-term monitoring system and high-strength grouting agent reserve to remarkably assure its service performance.
This manual introduces the OVM's latest research achievements and products' application of HS Thread Bar and its accessories and guides for engineering project designers and constructors.

The Strength Grade Code

For example,
PSB835, in which
“PSB”--- a defaulted model;
“835” ---Minimum yield strength of steel bar, 835MPa.

The diagram of HS Thread Bar

Design Reference of HS Thread Bar and Its Anchoring System

1. A722/A 722M-2007, Standard Specification for Uncoated High-Strength Steel Bars for Prestressing Concrete;
2. ETAG013-2002, Post-tensioning Kits for Prestressing of Structures;
3. GB/14370-2007, Anchorage, Grip and Coupler for Prestressing Tendons;
4. GB/T 20065-2006, Screw-thread Steel Bars for the Prestressing of Concrete;
5. JTG/T F50-2011, Technical Specification for Construction of Highway Bridge and Culvert

Design Index

1. The mechanical property of HS Thread Bar should satisfy the requirements specified in Table1;
2. Relaxation properties
   Relaxation losses: ≤ 3% of initially load of 80% ReL after 1000h test duration;
3. Static load performance
   Anchoring coefficient ≥ 95%, broken elongation ≥ 2%;
4. The anchoring draw-in: ≤ 1mm;
5. The ex-factory primary protection
   Blackening treatment on surface (or as per the customers' requirements) .

Φ50mm HS Thread Bar

Lock- coupler

Components HS Thread Bar anchoring system

Mechanical Properties of HS Thread Bar

Table 1. The mechanical performance of HS Thread Bar

Grade	Y. strength R el MPa	T. strength R m MPa	Broken Elongation A %	Elongation at Max. load A gt %	Relaxation property	
					Initial stress	relaxation losses after 1000h V r %
PSB785	≥785	≥980	≥7	≥3.5	0.8ReL	≤3
PSB830	≥835	≥1035	≥7			
PSB930	≥930	≥1080	≥7			

Note: When there is no obvious yield point appears, replace it with regulated non-proportional extension strength (R P0.2).

Nominal Cross-section Area, Load Parameter & Weight

Table 2. Parameters of nominal cross-section area and breaking load

N. Diameter mm	N. cross-section area mm^2	Nominal breaking load (KN) ≥			T. weight kg/m
		PSB785	PSB835	PSB930	
25	491	481	506	530	4.1
32	804	788	8286	868	6.6
40	1257	1232	1295	1356	10.3
50	1964	1925	2023	2121	16.0
65	3331	3264	3431	3597	27.2
75	4418	4330	4551	4771	36.0
82	5278	5172	5436	570	45.0
90	6359	6232	6550	--	52.0

The Shape of HS Thread Bar

The continuous external thread is made by cold extrolling method. The shape of thread bar is shown as following figure. The main dimensional parameters are shown in Table 3.

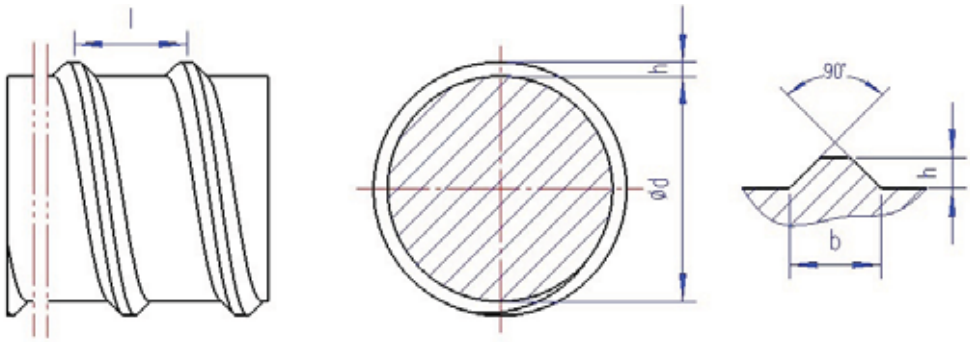

The diagrammatic sketch of HT Thread Bar

Table 3. The dimensional parameters of HS Thread Bar

Nominal Diameter mm	Base circle diameter mm	Height of screw mm	Bottom width of thread mm	Screw pitch mm
	d	h	b	l
25	25.0	1.8	5.0	12.0
32	32.0	1.8	1.8	1.8
40	40.0	2.5	7.0	20.0
50	50.0	3.0	9.0	24.0
65	65.0	3.5	11.0	24.0
75	75.0	3.5	12.0	24.0
82	82.0	3.5	12.0	24.0
90	90.0	3.8	13.0	28.0

Anchoring System Components

1.Composition of Anchoring kits

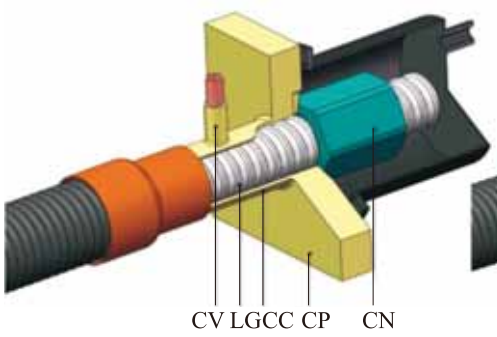

Type A Anchor nut

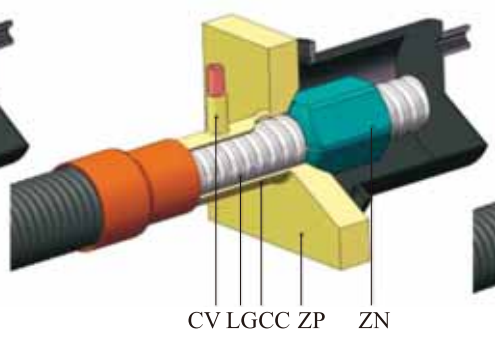

Type B Dome anchor nut

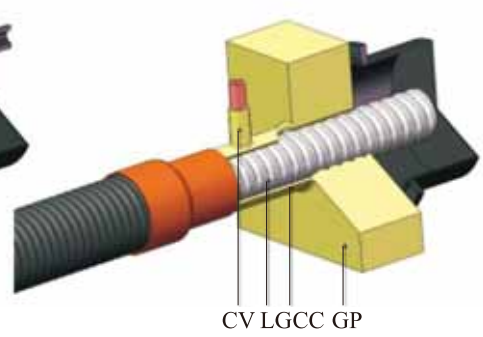

Type C Dead end

Type	Name	Feature	Unit	diameter (mm) (suitable for PSB835)								Diagram Referenc
				25	32	40	50	65	75	82	90	
High strength prestressed thread bar		cross-sectional area	mm2	491	804	1257	1964	3331	4418	5278	6359	LG
		breaking load	KN	505.7	828.1	1294.7	2022.9	3430.9	4550.5	5436.3	6549.8	
		modulus of elasticity	GPa	204±4	204±4	204±4	204±4	204±4	204±4	204±4	204±4	
		pitch	mm	12	12	20	24	24	24	24	28	
		weight	Kg/m	4.1	6.6	10.3	16.0	27.2	36.0	45.0	52.0	
		standard length	m	≤12	≤12	≤12	≤12	≤12	≤12	≤12	≤12	
Type A (Tensile end)	nut	length	mm	55	72	100	110	140	145	170	185	CN
		Edge width	mm	50	65	70	80	110	115	130	140	
	bearing plate	width	mm	120	140	160	210	270	300	320	350	CP
		thickness	mm	20	25	30	40	45	55	60	70	
Type B (Tensile end)	nut	length	mm	62	80	108	118	148	153	178	195	ZN
		Edge width	mm	50	65	70	80	110	115	130	140	
	bearing plate	width	mm	120	140	160	210	270	300	320	350	ZP
		thickness	mm	25	30	40	55	60	70	80	90	
Type C (Dead end)	bearing plate	Width	mm	130	130	140	150	160	175	185	200	GP
		thickness	mm	50	60	75	85	110	120	135	150	
Connecting sealing sleeve		length	mm	200	200	250	250	300	400	450	500	CC
		Out diameter	mm	42	51	60	70	89	95	114	121	
		thickness	mm	2.5	2.5	2.5	2.5	3	3	3	3	
Vent pipe		Thread specification	.	1/2	1/2	1/2	1/2	1/2	1	1	1	CV

Note: The above specifications and parameters can be customized according to customers' needs, and relevant parameters shall be based on the latest design.

2. Coupler components

Type A Composition of coupler component

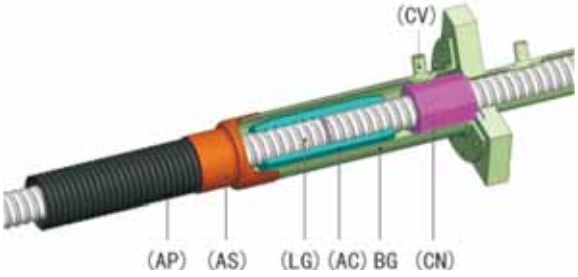

Type B Composition of coupler component

Table 5 Main geometry parameters of coupler components

Type	Name	Feature	Unit	HT Thread Bar diameter series (suitable for PSB835)								Diagram Reference
				25	32	40	50	65	75	82	90	
Connector		Outer diameter	mm	50	60	75	90	112	122	133	146	AC
		Length	mm	120	168	220	265	280	330	360	400	
Connector type A	PE duct	specification	mm	SBG-50	SBG-60	SBG-70	SBG-85	SBG-100	SBG-110	SBG-120	SBG-130	AP
	Thermal shrinkable sleeve	specification	mm	RS110/55	RS130/65	RS140/70	Rs160/80	RS180/90	RS180/90	RS200/100	RS220/110	AS
	Connecting sleeve	Outer diameter	mm	85	95	110	125	150	160	172	185	AR
		Thickness	mm	4	4	4	5	5	7	7	7	
Connector type B	Connecting Sealing sleeve	Outer diameter	mm	76	89	102	114	140	146	168	203	BG
		Thickness	mm	2	2	2	2	3	3	3	3	

Note: The above specifications and parameters can be customized according to customers' needs, and relevant parameters shall be based on the latest design.

Geotechnical (GT) Bar Solution

1.Type A GT bar

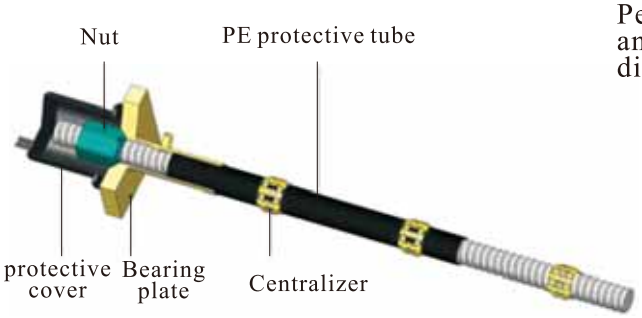

Type A GT bar composition

2.Type B GT bar

Permanent GT bar generally adopts double-layer anti-corrosive protection system: adopting hot dipping galvanization and corrugated PE pipe.

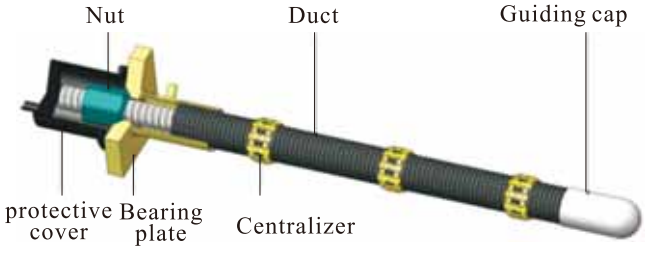

Structure composition anchor type B

Table 6 Data of Duct and aperture size

Diameter of Bar (mm)	25	32	40	50	65	75
Diameter of duct (Inner/Outer mm)	70/85		80/100	100/120	115/140	130/160
Drill hole diameters (mm)	Φ120		Φ130	Φ150	Φ170	Φ190

Tensioning Jacks

The HS Thread Bar can be tensioned by jacks equipped with turn-knob device, which constitutes tensioning jack, tensioning rod, tool nut, arm-brace and knob device. A jack with appropriate capacity shall be selected according to actual tensioning load requirement.

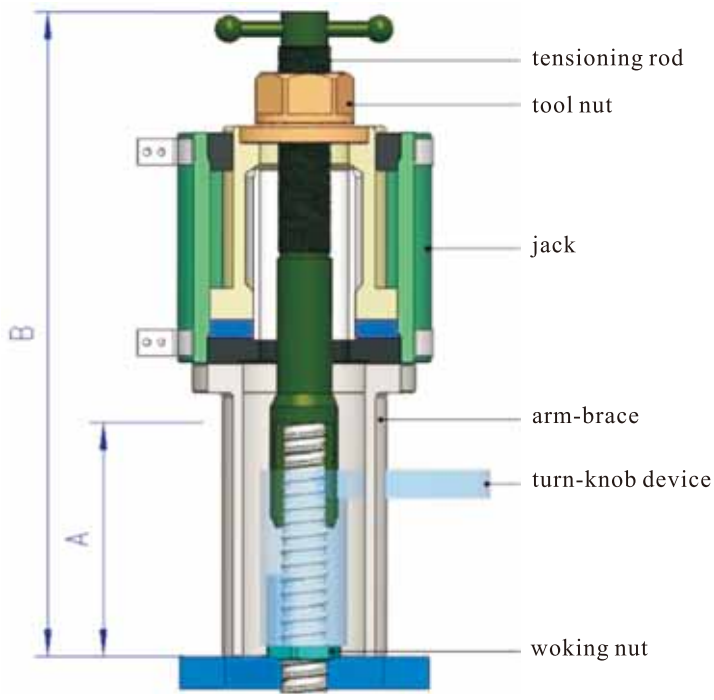

Installation schematic diagram

Note: In the figure, A is the reserve over length of bar out of bearing plate embedded,
B is the min. total length of jack setup.

Table 7 Main data of tensioning jack with turn-knob device

Type	YCW150B-ZLN	YCW250B-ZLN	YCW400B-ZLN	YCW650A-ZLN
Applicable bar size mm	25~32	40	50~65	75~90
N. capacity (KN)	1492	2480	3956	6500
Nom pressure (MPa)	50	54	52	49
Tension piston area (m^2)	0.0298	0.04592	0.07607	0.135
Return piston area (m^2)	0.0138	0.02802	0.04592	0.0707
Stroke (mm)	200	200	200	200
Cavity aperture (mm)	φ120	φ140	φ175	φ240
Weight(Kg)	108	164	270	960
Overall size(mm)	φ285×370	φ344×380	φ432×400	φ610×640
A (mm)	160~280	250~400	320~380	375~410
B (mm)	1000	1050	1150	1450

Applications

Test of OVM HS Thread Bar Φ75mm on prefabricated cushion caps, The Hong Kong - Zhuhai -Macau Bridge.

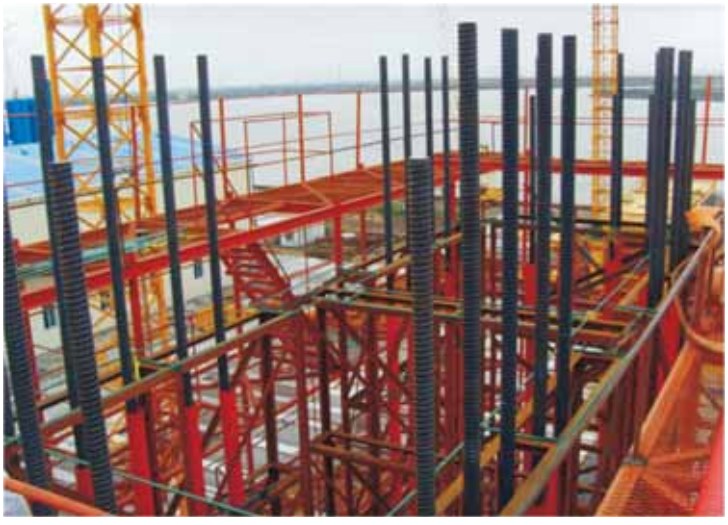

The installing of Φ75mm HS Thread Bar on the prefabricated cushion caps at section CB04, Hong Kong-Zhuhai-Macao Bridge.

OVM double protective layer bar kits used for reinforcement. (Φ32mm). Pakistan NJ Power Plant.

The Acceptance of HS Thread Bar

Refer to Table 8.

Table 8 Test items for HT Thread Bar (per delivery batch)

Serial No.	Test Item	Sampling quantity	Sampling methods	Experimental Method
1	Chemical composition	1	GB/T 20065	GB/T223.4、GB/T 223.5、GB/T 223.11 、GB/T 223.26、GB/T 223.61 、GB/T20123
2	Tensioning	2	Randomly select 2pcs	GB/T 228.1
3	Relaxation	1pc/1000 MT	Randomly select 1pc	GB/T 10120
4	Surface	Fully	Fully	Visual inspection
5	Weight Deviation	As required		

Construction Guide for HS Thread Bar

1. When the thread bar is heavy, it prefers to use crane to for handling, and soft sling should be essential to prevent anti-corrosive layer of thread bar from being scratched.
2. Define the installation length of thread bar and connect them together by couplers according to actual demands. During installation process, pay attention to preventing thread being scratched and contaminated.
3. Special attention to align the thread bar to the central axis of embedded hole and bearing plate after installation. The over length of thread bar on tensioning end should be long enough to meet the needs of tensioning connection.
4. Use a match tensioning jack to do tensioning, and it should be loaded gently at load rate of about 10 percentage of the designed stress per minute. Tensioning should be controlled by both the tensile force and the elongation value. If there is a big difference between the actual value of elongation and the theoretical value, the tensioning should be suspended, and only after identifying of the cause and proper solutions have been taken, can it be continued.
5. After tensioning, the working nut shall be tightened with the turn-knob device with the rated torque value. When unloading Jack, unloading rate should be controlled at about 20 percentage of designed stress per Min.
6. Duct grouting and anchor sealing shall be done within 24 hours after tensioning.

Construction Precautions

1. HS Thread Bars and its accessories should be properly protected during storage, handling and using, to avoid corrosion, contamination, mechanical damage, confusion and losses.
2. During installation, thread bar should avoid unbalance loading and collision.
3. Matters not covered herein shall be implemented in accordance with and meet to relevant standards in JTG/T F50-2011, Technical Specification for Construction of Highway Bridge and Culvert, CECS 22:2005, Technical Specification for Ground Anchors, PTI, Acceptance Standards For Post-Tensioning System, BS EN1537-2013, Execution of special geotechnical works, Ground anchors, etc.

OVM's global network covers more than 60 countries and regions around Asia, Africa, East Europe, Latin America, Middle East and Russia. OVM's overseas offices have been set up in Vietnam, Indonesia, Saudi Arabia, Iran, Middle East, North Africa and Hong Kong.

LIUZHOU OVM MACHINERY CO., LTD.
HEADQUARTERS
No.1, Yanghui Road, Yang He New Industrial Area,
Liuzhou, Guangxi, 545006, P.R.China
Tel: +86 772 3116402 Fax: +86 772 3118665
sales@ovm.cn
www.ovm.cn

Contents in this brochure are subject to review and amendment without further notice.

美高美设计 0772-8252208 2818124