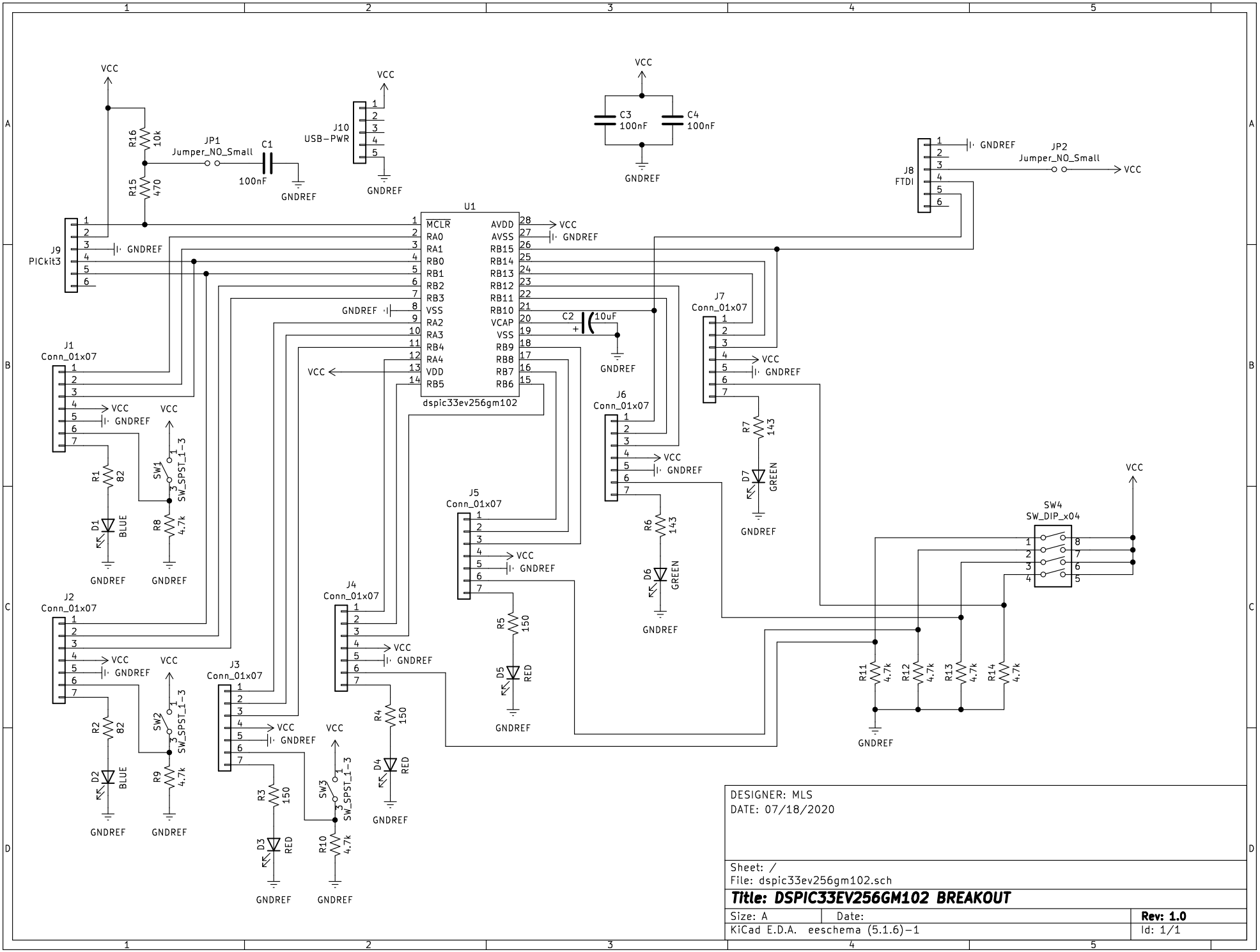

DESIGNER: MLS
DATE: 07/18/2020

Sheet: /
File: dspic33ev256gm102.sch

Title: DSPIC33EV256GM102 BREAKOUT

Size: A	Date:	Rev: 1.0
KiCad E.D.A. eeschema (5.1.6)-1		Id: 1/1