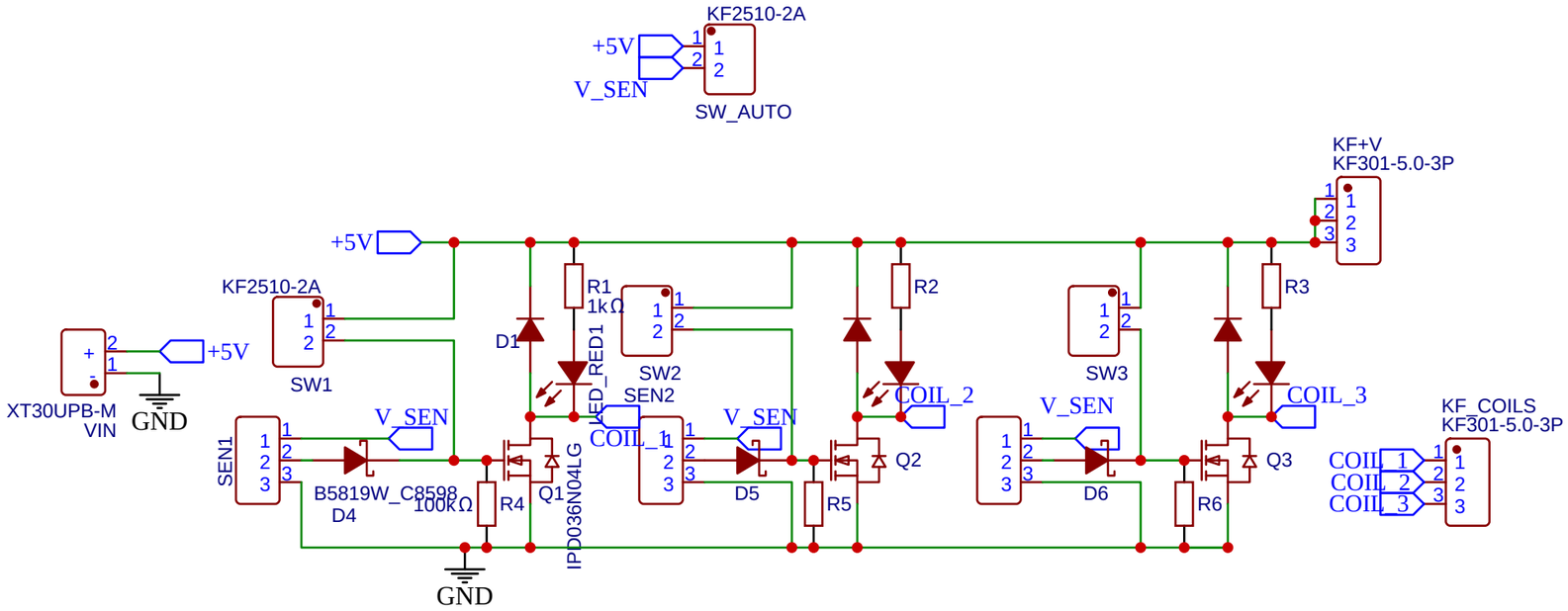

TITLE: Demo Motor Coil Driver energy exhebition		REV: 1.0
嘉立创EDA	Company: Your Company	Sheet: 1/1
	Date: 2024-10-13 Drawn By: AmirB	