Light(reflector near) >> S_OUT High

To set C out high - JIn+ jumper to S-Out and JIN- to V_D

To set C Low high - JIn+ jumper to V_D and JIN- to S-Out

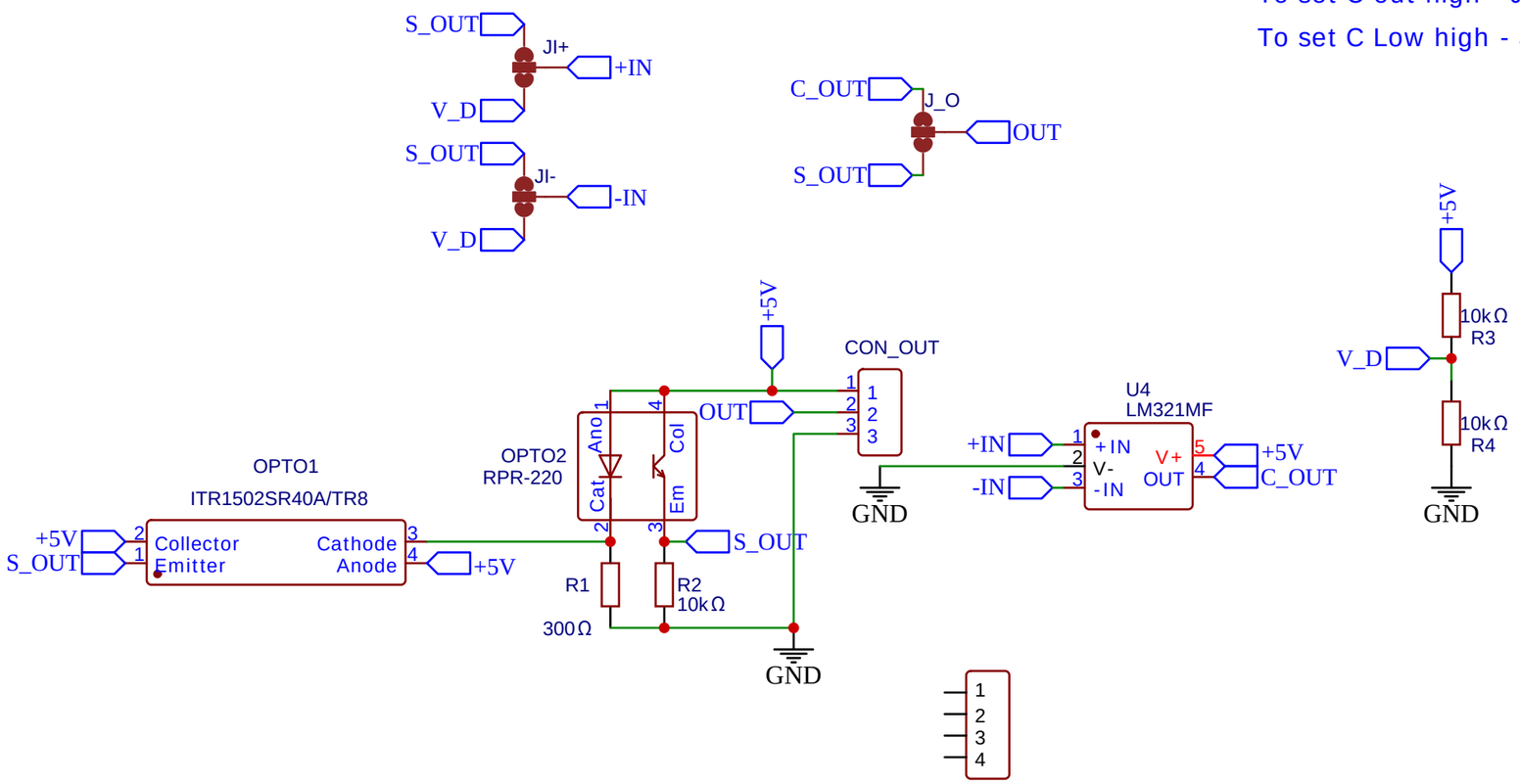

opto sensor for aitomatic mode motor exhibit energy exhebition
based on drop sensor for water drop screen and/or UV cure exhebit

TITLE:		REV: 0.0
EasyEDA	Company: Your Company	Sheet: 1/1
	Date: 2024-10-13 Drawn By: AmirB	