*Sure*Servo™ AC Servo Systems User Manual

SV-USER-M-WO

Second Edition, Revision B

AUTOMATIONDIRECT.com

BLANK
PAGE

WARNING

Thank you for purchasing automation equipment from Automationdirect.com®, doing business as AutomationDirect. We want your new automation equipment to operate safely. Anyone who installs or uses this equipment should read this publication (and any other relevant publications) before installing or operating the equipment.

To minimize the risk of potential safety problems, you should follow all applicable local and national codes that regulate the installation and operation of your equipment. These codes vary from area to area and usually change with time. It is your responsibility to determine which codes should be followed, and to verify that the equipment, installation, and operation is in compliance with the latest revision of these codes.

At a minimum, you should follow all applicable sections of the National Fire Code, National Electrical Code, and the codes of the National Electrical Manufacturer's Association (NEMA). There may be local regulatory or government offices that can also help determine which codes and standards are necessary for safe installation and operation.

Equipment damage or serious injury to personnel can result from the failure to follow all applicable codes and standards. We do not guarantee the products described in this publication are suitable for your particular application, nor do we assume any responsibility for your product design, installation, or operation.

Our products are not fault-tolerant and are not designed, manufactured or intended for use or resale as on-line control equipment in hazardous environments requiring fail-safe performance, such as in the operation of nuclear facilities, aircraft navigation or communication systems, air traffic control, direct life support machines, or weapons systems, in which the failure of the product could lead directly to death, personal injury, or severe physical or environmental damage ("High Risk Activities"). AutomationDirect specifically disclaims any expressed or implied warranty of fitness for High Risk Activities.

For additional warranty and safety information, see the Terms and Conditions section of our catalog. If you have any questions concerning the installation or operation of this equipment, or if you need additional information, please call us at 770-844-4200.

This publication is based on information that was available at the time it was printed. At AutomationDirect we constantly strive to improve our products and services, so we reserve the right to make changes to the products and/or publications at any time without notice and without any obligation. This publication may also discuss features that may not be available in certain revisions of the product.

Trademarks

This publication may contain references to products produced and/or offered by other companies. The product and company names may be trademarked and are the sole property of their respective owners. AutomationDirect disclaims any proprietary interest in the marks and names of others.

Copyright 2005-2008, 2010, 2011 Automationdirect.com® Incorporated
All Rights Reserved

No part of this manual shall be copied, reproduced, or transmitted in any way without the prior, written consent of Automationdirect.com® Incorporated. AutomationDirect retains the exclusive rights to all information included in this document.

AVERTISSEMENT

Nous vous remercions d'avoir acheté l'équipement d'automatisation de Automationdirect.com®, en faisant des affaires comme AutomationDirect. Nous tenons à ce que votre nouvel équipement d'automatisation fonctionne en toute sécurité. Toute personne qui installe ou utilise cet équipement doit lire la présente publication (et toutes les autres publications pertinentes) avant de l'installer ou de l'utiliser.

Afin de réduire au minimum le risque d'éventuels problèmes de sécurité, vous devez respecter tous les codes locaux et nationaux applicables régissant l'installation et le fonctionnement de votre équipement. Ces codes diffèrent d'une région à l'autre et, habituellement, évoluent au fil du temps. Il vous incombe de déterminer les codes à respecter et de vous assurer que l'équipement, l'installation et le fonctionnement sont conformes aux exigences de la version la plus récente de ces codes.

Vous devez, à tout le moins, respecter toutes les sections applicables du Code national de prévention des incendies, du Code national de l'électricité et des codes de la National Electrical Manufacturer's Association (NEMA). Des organismes de réglementation ou des services gouvernementaux locaux peuvent également vous aider à déterminer les codes ainsi que les normes à respecter pour assurer une installation et un fonctionnement sûrs.

L'omission de respecter la totalité des codes et des normes applicables peut entraîner des dommages à l'équipement ou causer de graves blessures au personnel. Nous ne garantissons pas que les produits décrits dans cette publication conviennent à votre application particulière et nous n'assumons aucune responsabilité à l'égard de la conception, de l'installation ou du fonctionnement de votre produit.

Nos produits ne sont pas insensibles aux défaillances et ne sont ni conçus ni fabriqués pour l'utilisation ou la revente en tant qu'équipement de commande en ligne dans des environnements dangereux nécessitant une sécurité absolue, par exemple, l'exploitation d'installations nucléaires, les systèmes de navigation aérienne ou de communication, le contrôle de la circulation aérienne, les équipements de survie ou les systèmes d'armes, pour lesquels la défaillance du produit peut provoquer la mort, des blessures corporelles ou de graves dommages matériels ou environnementaux («activités à risque élevé»). La société AutomationDirect nie toute garantie expresse ou implicite d'aptitude à l'emploi en ce qui a trait aux activités à risque élevé.

Pour des renseignements additionnels touchant la garantie et la sécurité, veuillez consulter la section Modalités et conditions de notre documentation. Si vous avez des questions au sujet de l'installation ou du fonctionnement de cet équipement, ou encore si vous avez besoin de renseignements supplémentaires, n'hésitez pas à nous téléphoner au 770-844-4200.

Cette publication s'appuie sur l'information qui était disponible au moment de l'impression. À la société AutomationDirect, nous nous efforçons constamment d'améliorer nos produits et services. C'est pourquoi nous nous réservons le droit d'apporter des modifications aux produits ou aux publications en tout temps, sans préavis ni quelque obligation que ce soit. La présente publication peut aussi porter sur des caractéristiques susceptibles de ne pas être offertes dans certaines versions révisées du produit.

Marques de commerce

La présente publication peut contenir des références à des produits fabriqués ou offerts par d'autres entreprises. Les désignations des produits et des entreprises peuvent être des marques de commerce et appartiennent exclusivement à leurs propriétaires respectifs. AutomationDirect nie tout intérêt dans les autres marques et désignations.

Copyright 2005-2008, 2010, 2011 Automationdirect.com® Incorporated
Tous droits réservés

Nulle partie de ce manuel ne doit être copiée, reproduite ou transmise de quelque façon que ce soit sans le consentement préalable écrit de la société Automationdirect.com® Incorporated. AutomationDirect conserve les droits exclusifs à l'égard de tous les renseignements contenus dans le présent document.

WARNING

WARNING: Always read this manual thoroughly before using *Sure*Servo™ series AC servo systems.

WARNING: Do not use the *Sure*Servo™ series AC servo system in a potentially explosive environment. Install the servo system components in a clean and dry location free from corrosive or flammable gases or liquids.

WARNING: AC input power must be disconnected before performing any maintenance. Do not connect or disconnect wires or connectors to the servo drive or motor while power is applied to the circuit. Maintenance must be performed only by a qualified technician.

WARNING: The servo motor or drive may be destroyed if incorrect cables are connected to the input/output terminals. Do not connect a power supply source to the U, V, W output terminals of the drive.

WARNING: Properly ground the servo drive and motor using the ground terminals. The grounding method must comply with the laws of the country where the AC servo is to be installed. Refer to "Wiring Diagrams" in CHAPTER 3.

WARNING: Before starting the servo system with a mechanical system connected, make sure that the emergency stop equipment can stop the servo at any time.

WARNING: Do not touch the servo drive heat sink or the servo motor during operation. Otherwise, serious personal injury may result.

WARNING: A charge with hazardous voltages may still remain in the DC-link capacitor even if the power has been turned off. To avoid personal injury, do not remove the cover of the AC servo drive. There are no user serviceable parts inside the drive.

WARNING: The mounting enclosure of the AC drive must comply with EN50178. Live parts shall be arranged in enclosures or located behind barriers that meet at least the requirements of the Protective Type IP20. The top surface of the enclosures or barrier that is easily accessible shall meet at least the requirements of the Protective Type IP40. Users must provide this environment for the *Sure*Servo™ AC servo drive.

BLANK
PAGE

SureServo™
AC Servo Systems
USER MANUAL

Please include the Manual Number and the Manual Issue, both shown below, when communicating with Technical Support regarding this publication.

Manual Number: **SV-USER-M-WO**

Issue: **Second Edition, Revision B**

Issue Date: **08/2011**

Publication History		
Issue	**Date**	**Description of Changes**
First Edition	01/06	Original Issue
1st Ed, Rev A	03/06	Various minor changes and corrections, mostly to wiring diagrams
1st Ed, Rev B	09/07	New Appendix D for new firmware v2.10
Second Edition	02/2008	Changed manual # by adding "-WO" suffix; Combined former Ch2&3 & revised chapter sequence for new Ch2~7; Ch2 changes to terminal and wiring diagrams; Ch3 fault reset from keypad; Ch4 new parameter changes, especially for firmware v2.10; AppxA new quickstart tuning section; Various minor changes and corrections throughout
2nd Ed, Rev A	08/2010	Ch1: specifications Ch2: terminals, terminal accessories, wiring diagrams, analog I/O resolution Ch4: parameter settings, explanations, & firmware version notes Ch5: P1-34, P1-35, P2-02 Ch6: additional parameters; program revisions Ch7: faults ALE 12, 14, 15; note in "Clearing Faults" table AppxA: minor clarifications AppxC: terminal accessories
2nd Ed, Rev B	08/2011	Ch1: drive heat loss specifications Ch4: P0-18; P1-46 control modes; P2-10~P2-17 setting 02; P2-23~P2-25 resonance explanation Ch6: P0-18 Ch7: ALE11 AppxD: P0-18

BLANK
PAGE

SV-USER-M-WO
Table of Contents

Chapter 1: Getting Started

Manual Overview 1–2
- Overview of This Publication 1–2
- Who Should Read This Manual 1–2
- Supplemental Publications 1–2
- Technical Support 1–2
- Special Symbols 1–2

*Sure*Servo™ AC Servo Systems Introduction 1–3
- *Sure*Servo Basic Overview 1–3
- Unpacking Your New *Sure*Servo 1–4
- Nameplate Information 1–5
- Model Explanation 1–5
- Identification and Labeling: *Sure*Servo AC Servo Drive 1–6
- Drive and Motor Combinations 1–6
- *Sure*Servo AC Servo Drive Control Modes 1–7

*Sure*Servo™ AC Servo System Specifications 1–8
- Drive Specifications 1–8
- Motor Specifications 1–10
- Motor Velocity-Torque Curves 1–12
- Motor Overload Characteristics 1–13

Chapter 2: Installation and Wiring

Storage Conditions 2–2
Installation 2–3
Servo Drive Mounting 2–3
Servo Drive Minimum Clearances and Air Flow 2–4
Servo Motor Mounting 2–4
Dimensions 2–5
Servo Drive Dimensions 2–5
Servo Motor Dimensions 2–8
Accessory I/O Terminal Module Dimensions 2–11
Circuit Connection Warnings 2–12
Servo Drive Terminals 2–13
Power Terminals 2–14
CN1 – Input/Output Terminal 2–15
CN2 – Encoder Terminal 2–20
CN3 – Serial Communication Terminal 2–21
Servo Motor Terminal Connections 2–22
Power Connections 2–22
Encoder Connections 2–23
Wiring Diagrams 2–24
Connecting to Peripheral Devices 2–24
Power Wiring Connections 2–25
Wiring for Position (Pr & Pt) Control Modes 2–26
Wiring for Velocity and Torque Control Modes 2–27
CN1 Input/Output Wiring Diagrams 2–28
CN2 Encoder Wiring Diagram 2–33
CN3 Serial Communication Wiring Diagram 2–33
Cables and Terminal Connectors 2–34
Drive, Motor, and Cable Combinations 2–34
Drive Terminal Connection Module & Cables 2–35
Servo Drive Circuit Protection 2–36

Chapter 3: Keypad and Display Operation

Digital Keypad 3–2
Display Flowchart 3–3
Display Messages 3–4
Parameter Setting Value Change Messages 3–4
Abort Parameter Setting Value Change Message 3–4
Fault Message Display 3–4
Polarity Display of Parameter Setting Values 3–5
Monitor Mode Function Display 3–5
Polarity Display of Monitor Values 3–6
Servo Drive General Operation 3–7
Display Fault History 3–7
JOG Function 3–7
Teach Position Function 3–8
DO Force Output Function 3–9
Display Digital Input Status 3–10
Display Digital Output Status 3–10

Chapter 4: Servo Drive Parameters

Parameter Overview and Note Symbols 4–2
Parameter Groups 4–2
Reset Parameter Defaults 4–2
Abbreviations of Control Modes 4–2
Parameter Summary Notes 4–2
Parameter Summary 4–3
Parameter Firmware Versions 4–3
Parameter Summary Listings 4–3
Detailed Parameter Listings 4–10
Sample Parameter Listing 4–10
Monitor Parameters 4–11
Basic Parameters 4–17
Extended Parameters 4–40
Communication Parameters 4–66
Diagnostic Parameters 4–69

Chapter 5: Control Modes of Operation and Tuning

Control Modes of Operation 5–2
How to Change Control Modes 5–2
Position Control Modes 5–3
Structure of Position Control Modes 5–3
Electronic Gear Ratio 5–4
Position Command Low-pass Filter 5–5
Position Loop Gain Adjustment 5–5
Command Source of Pt Position Control Mode 5–6
Command Source of Pr Position Control Mode 5–7
Timing Chart of Pr Position Control Mode 5–8
Teach Position Function for Pr Absolute Position Control 5–9
S-curve Filter for Pr Position Control 5–9
Parameters for Absolute and Incremental Pr Control 5–10
Parameters for Index Mode Pr Control 5–12
Parameters for Absolute and Incremental Auto Pr Control 5–22
Velocity Control Mode 5–27
Command Source of Velocity Control Mode 5–27
Structure of Velocity Control Mode 5–28
Smoothing Strategy of Velocity Control Mode 5–29
Analog Velocity Input Scaling 5–30
Timing Chart of Velocity Control Mode 5–30
Velocity Loop Gain Adjustment 5–31
Resonance Suppression 5–31
Torque Control Mode 5–34
Command Source of Torque Control Mode 5–34
Structure of Torque Control Mode 5–35
Smoothing Strategy of Torque Control Mode 5–35
Analog Torque Input Scaling 5–36
Timing Chart of Torque Control Mode 5–36
Dual Control Modes Selection 5–37
Position / Velocity Control Mode Selection 5–37
Position / Torque Control Mode Selection 5–38
Velocity / Torque Control Mode Selection 5–39
Limits 5–40
Velocity Limit 5–40
Torque Limit 5–40

Regenerative Resistor 5–41
Built-in Regenerative Resistor 5–41
External Regenerative Resistor 5–41
Electromagnetic Brake 5–43
Tuning Modes Overview 5–45
Purpose of Tuning; Why and When it is Necessary 5–45
*Sure*Servo Tuning Modes Available 5–46
Tuning Modes and Their Relevant Parameters 5–47
Monitoring System Performance 5–47
Tuning Modes Details 5–48
Auto-Tuning Modes 5–48
Using Auto-Tune PI Mode 5–49
Using Auto-Tune PDFF Mode 5–51
Using Easy-Tune Mode 5–53
Using Manual Tuning Mode 5–55
Manual Tuning Mode Details 5–57

Chapter 6: Modbus Communications

*Sure*Servo™ Communication Parameters 6–2
*Sure*Servo™ Parameter Memory Addresses 6–3
Connecting to *Direct*LOGIC PLCs 6–8
Step 1: Modbus RTU Master PLCs 6–8
Step 2: Make the Connections 6–8
Step 3: Confirm/Set Servo Communication Parameters 6–10
Step 4: Configure the *Direct*LOGIC CPU Port 2 6–10
*Sure*Servo™ / *Direct*LOGIC PLC Control Example 6–13
*Direct*LOGIC Ladder Programming Example – Multiple Drives 6–22
Communicating with Third-party Devices 6–24
Common Modbus RTU Masters 6–24
Modbus Protocol Modes 6–25
Modbus ASCII and RTU Data Format 6–25
Communication Protocol 6–27

Chapter 7: Maintenance and Troubleshooting

Maintenance and Inspection 7–2
Basic Inspection 7–2
Maintenance 7–3
Expected Life of Replacement Components 7–3
Troubleshooting 7–4
Fault & Warning Message Table 7–4
Fault Message Potential Causes and Corrective Actions 7–5
Warning Message Potential Causes and Corrective Actions 7–9
Clearing Faults 7–10

Appendix A: *Sure*Servo™ Quick Start Guide

Quick Start for *Sure*Servo™ Drives A–2
Spin the Motor A–2
Position Mode Quick Start (Pt & Pr) A–4
Velocity Mode Quick Start (V & Vz) A–8
Torque Mode Quick Start (T & Tz) A–10
Tuning Quick Start for *Sure*Servo™ Drives A–12
Tuning Overview A–12
PDFF Adaptive Auto-Tune Mode Adjustments A–12

Appendix B: Selecting the *Sure*Servo™ Servo System

Selecting the *Sure*Servo™ Servo System B–2
The Selection Procedure B–2
How many pulses from the PLC to make the move? B–2
What is the positioning resolution of the load? B–3
What is the indexing speed to accomplish the move time? B–3
Calculating the Required Torque B–4
Leadscrew – Example Calculations B–8
Step 1 – Define the Actuator and Motion Requirements B–8
Step 2 – Determine the Positioning Resolution of the Load B–8
Step 3 – Determine the Motion Profile B–9
Step 4 – Determine the Required Motor Torque B–9
Step 5 – Select and Confirm the Servo Motor and Driver System .B–10

Belt Drive – Example Calculations B–11
Step 1 – Define the Actuator and Motion Requirements B–11
Step 2 – Determine the Positioning Resolution of the Load B–11
Step 3 – Determine the Motion Profile B–12
Step 4 – Determine the Required Motor Torque B–12
Step 5 – Select and Confirm the Servo Motor and Driver System .B–13
Index Table – Example Calculations B–14
Step 1 – Define the Actuator and Motion Requirements B–14
Step 2 – Determine the Positioning Resolution of the Load B–14
Step 3 – Determine the Motion Profile B–15
Step 4 – Determine the Required Motor Torque B–15
Step 5 – Select and Confirm the Servo Motor and Driver System .B–16
Engineering Unit Conversion Tables, Formulas, & Definitions:B–17

Appendix C: Using *Sure*Servo™ with *Direct*LOGIC PLCs

Compatible *Direct*LOGIC PLCs and Modules C–2
Typical Connections to a DL05 PLC C–4
Typical Connections to an H0-CTRIO C–5
Typical Connections – Multiple Drives/Motors Through Communication C–7
Connecting *Sure*Servo™ to ADC Line Driver Encoders C–8
Connecting *Sure*Servo™ to ADC Open-Collector Encoders . . .C–9

Appendix D: Latest *Sure*Servo™ Firmware Revisions

*Sure*Servo™ Firmware Identification D–2
Overview of Changes in New Firmware Versions D–2
Firmware Version 2.105 . . . . . .D–2
Firmware Version 2.10 . . . . . .D–2
Drive Operation Changes in Firmware Version 2.10 . . . . . .D–2
Summary of Firmware v2.10 Parameter Changes D–3
Detailed Parameter Listings D–4

BLANK
PAGE

GETTING STARTED

CHAPTER 1

In This Chapter ...

Manual Overview 1–2

Overview of This Publication 1–2

Who Should Read This Manual 1–2

Supplemental Publications 1–2

Technical Support 1–2

Special Symbols 1–2

*Sure*Servo™ AC Servo Systems Introduction 1–3

*Sure*Servo™ Basic Overview 1–3

Unpacking Your New *Sure*Servo™ 1–4

Nameplate Information 1–5

Model Explanation 1–5

Identification and Labeling: *Sure*Servo™ AC Servo Drive 1–6

Drive and Motor Combinations 1–6

*Sure*Servo™ AC Servo Drive Control Modes 1–7

*Sure*Servo™ AC Servo System Specifications 1–8

Drive Specifications 1–8

Motor Specifications 1–10

Motor Velocity-Torque Curves 1–12

Motor Overload Characteristics 1–13

Manual Overview

Overview of This Publication

The *Sure*Servo™ AC Servo Systems User Manual describes the installation, wiring, configuration, inspection, and operation of the *Sure*Servo™ series AC servo drives and motors.

Who Should Read This Manual

This manual contains important information for people who will install, configure, maintain, and/or operate any of the *Sure*Servo™ series AC servo systems.

Supplemental Publications

The National Electrical Manufacturers Association (NEMA) publishes many different documents that discuss standards for industrial control equipment. Global Engineering Documents handles the sale of NEMA documents. For more information, you can contact Global Engineering Documents at:

15 Inverness Way East
Englewood, CO 80112-5776
1-800-854-7179 (within the U.S.)
303-397-7956 (international)
www.global.ihs.com

NEMA documents that might assist with your AC servo systems are:

- **NEMA ICS 16 - Motion/Position Control Motors, Controls, and Feedback Devices**

Technical Support

By Telephone: 770-844-4200
(Mon.-Fri., 9:00 a.m.-6:00 p.m. E.T.)
On the Web: www.automationdirect.com

Our technical support group is glad to work with you in answering your questions. If you cannot find the solution to your particular application, or, if for any reason you need additional technical assistance, please call technical support at **770-844-4200**. We are available weekdays from 9:00 a.m. to 6:00 p.m. Eastern Time (U.S.A.). We also encourage you to visit our web site where you can find technical and non-technical information about our products and our company. Visit us at **www.automationdirect.com**.

Special Symbols

When you see the "notepad" icon in the left-hand margin, the paragraph to its immediate right will be a special note.

When you see the "exclamation mark" icon in the left-hand margin, the paragraph to its immediate right will be a WARNING. This information could prevent injury, loss of property, or even death (in extreme cases).

*Sure*Servo™ AC Servo Systems Introduction

*Sure*Servo™ Basic Overview

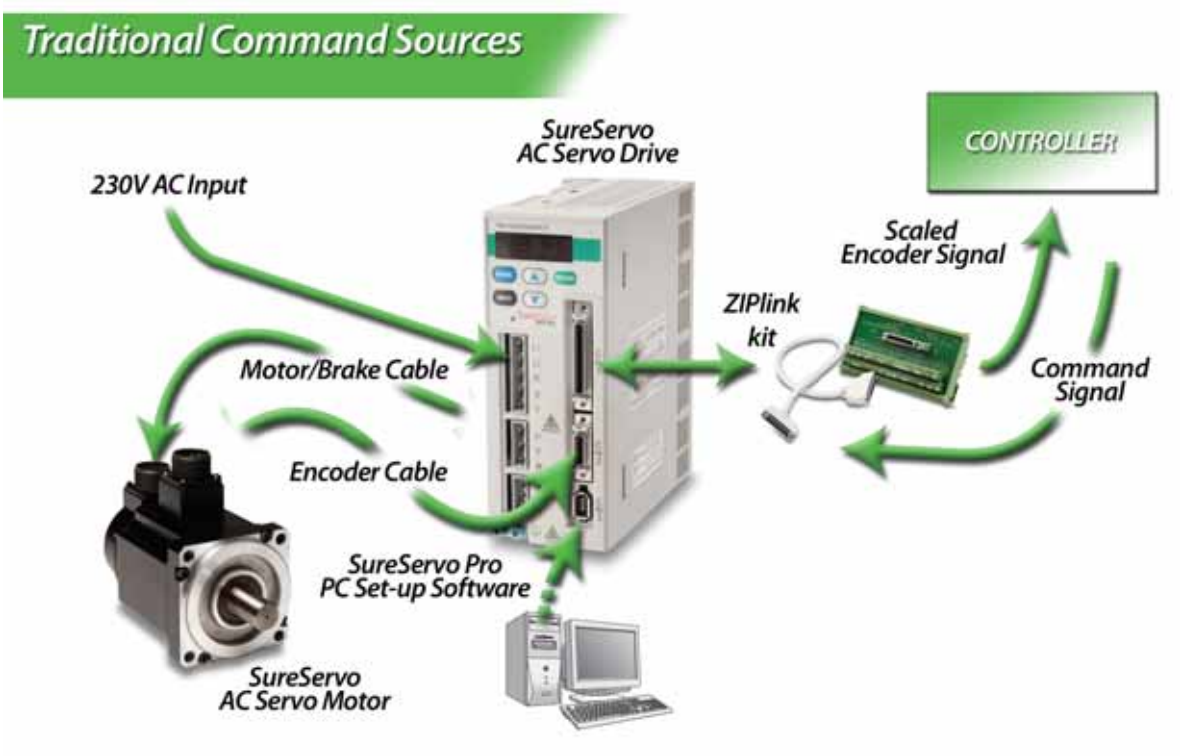

The *Sure*Servo AC servo systems range in size from 100W to 3kW continuous power and provide up to 26.4 ft-lbs of peak torque. They can be powered with single or three-phase 230 VAC. The *Sure*Servo drives can be controlled in position, velocity, or torque mode. All *Sure*Servo motor sizes are available with or without a 24 VDC holding brake. Standard cable sets from 10 to 60 feet in length are available.

Precise Positioning

*Sure*Servo systems are easily controlled via 'step & direction,' 'step-up/step-down,' or quadrature encoder input commands from any PLC with a high-speed output. Electronic gearing can be used to scale the incoming pulse frequency from the PLC. This allows the pulses from the PLC to command the exact amount of movement required for a specific application.

On-board Internal Indexer allows the programming of up to eight unique motion profiles.

Digital inputs can be used to initiate any of these profiles. The built-in MODBUS interface offers the flexibility of downloading an unlimited number of customized motion profiles to the drive as they are needed. These profiles can be selected based on additional MODBUS commands or via digital inputs.

Complete Control

Eight programmable inputs and five programmable outputs assure real-time connectivity with any control system. Velocity and torque can be controlled with a ±10V analog input signal or with the onboard Internal Indexer. Two analog outputs are available and configurable for monitoring purposes.

When using the *Sure*Servo traditional command interface (±10V analog signal or high speed pulse output), all programming is performed in the PLC. Many of the PLCs available from AutomationDirect offer some form of high-speed pulse output. Even the DL05 (DC output) includes a single 7kHz high-speed output which can be used for limited motion control applications.

The *Sure*Servo's ability to download custom motion profiles from a PLC on the fly, and execute these moves on command, allows the ultimate in flexibility and control with a PLC-based motion controller.

Tune-up and Tune-in

Three tuning modes include: manual, adaptive easy-tune, and adaptive auto-tune. The adaptive modes allow the drive to adapt to dynamic load conditions during operation with little or no initial set-up required.

Communication

The *Sure*Servo drive parameters can be changed from the drive's built-in keypad, or from *Sure*Servo Pro™ configuration software. *Sure*Servo drives can also communicate via a MODBUS interface across RS-232, RS-422 or RS-485 serial links. Multiple *Sure*Servo systems can be controlled via a single MODBUS port on the PLC. The MODBUS link can also supply information back to the controller about the performance and status of the servo motor and drive systems.

Unpacking Your New *Sure*Servo

After receiving the AC servo system, please check for the following:

- Make sure that the package includes all of the contents:
  - AC servo drive, connectors, and installation sheet -or-
  - AC servo motor and installation sheet -or-
  - AC servo drive wiring tool.
  - AC servo cable.
- Inspect the units to insure that they were not damaged during shipment.
- Make sure that the part numbers indicated on the component nameplates correspond with the part numbers of your order.
- Make sure that the servo motor shaft rotates normally. Rotate the shaft by hand, and it should rotate easily. The shaft will not turn on motors with the brake option, unless the brake is released by proper application of a 24 VDC supply.
- Make sure that all screws are securely tightened.

Nameplate Information

Example of servo drive nameplate:

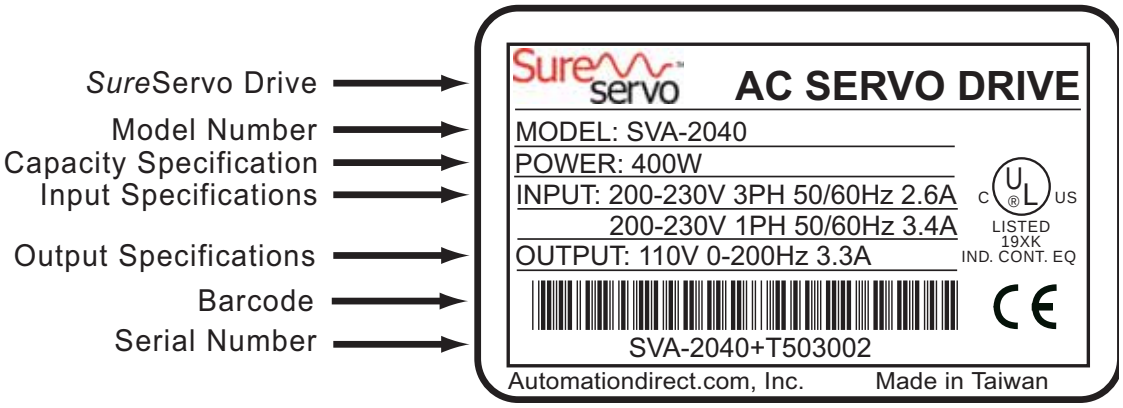

Example of servo motor nameplate:

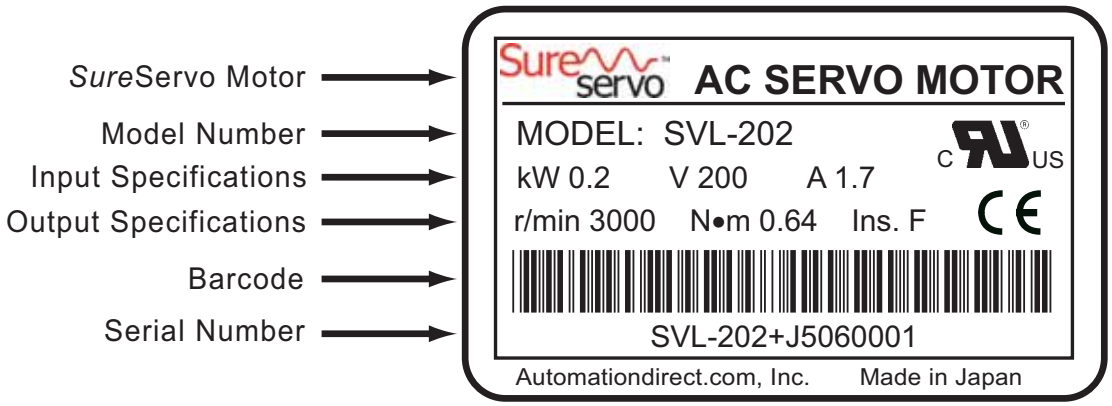

Model Explanation

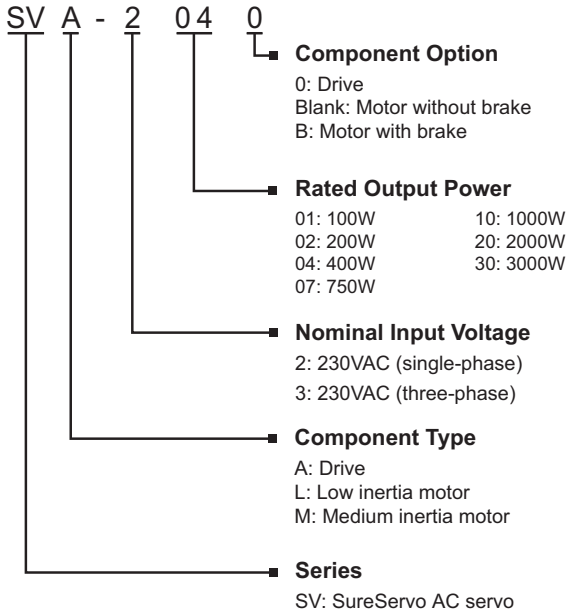

Identification and Labeling: *Sure*Servo™ AC Servo Drive

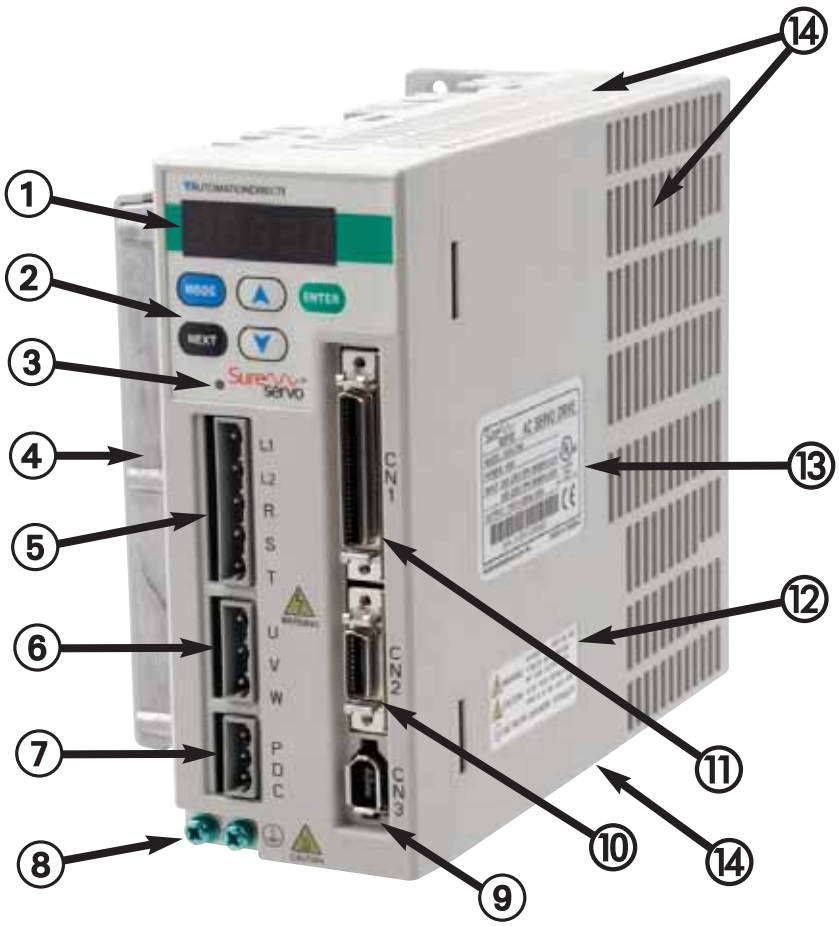

1) LED display
2) Digital keypad
3) Charge LED
4) Heat sink
5) Input and control power terminal*
6) Motor Output power terminal*
7) Regenerative resistor terminal*
8) Ground terminals
9) Serial communication connector
10) Encoder connector
11) I/O connector
12) Warning/Caution label
13) Nameplate label
14) Ventilation slots (on top, bottom, and right sides of drive)

* SVA-2040 & SVA-2100 include removable terminal connectors; SVA-2300 has screw terminals.

Drive and Motor Combinations

Drive and Motor Combinations					
Inertia	**Power**	**Servo drive ***	**Servo motor (no brake)**	**Servo motor (with brake)**	**Motor Code ***
Low inertia	100W	SVA-2040	SVL-201	SVL-201B	10 (default)
	200W		SVL-202	SVL-202B	11
	400W		SVL-204	SVL-204B	12
	750W	SVA-2100	SVL-207	SVL-207B	20 (default)
	1000W		SVL-210	SVL-210B	21
Medium inertia	1000W		SVM-210	SVM-210B	22
	2000W	SVA-2300	SVM-220	SVM-220B	30 (default)
	3000W		SVM-230	SVM-230B	31

***WARNING: To prevent damage to the servo system, be sure to set the servo drive parameter 1.31 to the proper motor code before running the motor.**

*Sure*Servo™ AC Servo Drive Control Modes

The *Sure*Servo drive can be configured to provide six single and five dual control modes, as shown in the table below. These control modes can be set by parameter P1-01. If the control mode is changed, the drive must be powered off and back on again (power cycled) before the new modes will become active.

All preset values (speed, position, torque) are addressable via MODBUS, giving an unlimited number of setpoints.

Drive Control Modes			
	Control Mode	**Code**	**Description**
Single Mode	External Position	Pt	Position control achieved by an external pulse signal command.
	Internal Position	Pr	Position control achieved from up to eight commands stored within the drive and selected by digital input (DI) signals.
	Velocity	V	Velocity (speed) control achieved either by an external analog signal (-10 to +10Vdc), or by parameters set within the drive and selected by digital input (DI) signals. (Up to three speeds can be stored internally.)
	Internal Velocity	Vz	Velocity (speed) control achieved only by parameters set within the drive and selected by digital input (DI) signals. (Up to three speeds can be stored internally.)
	Torque	T	Torque control achieved either by an external analog signal (-10 to +10Vdc), or by parameters set within the drive and selected by digital input (DI) signals. (Up to three torque levels can be stored internally.)
	Internal Torque	Tz	Torque control achieved only by parameters set within the drive and selected by digital input (DI) signals. (Up to three torque levels can be stored internally.)
Dual Mode	External Position - Velocity	Pt-S	Either Pt or S control can be selected by digital input (DI) signals.
	External Position - Torque	Pt-T	Either Pt or T control can be selected by digital input (DI) signals.
	Internal Position - Velocity	Pr-S	Either Pr or S control can be selected by digital input (DI) signals.
	Internal Position - Torque	Pr-T	Either Pr or T control can be selected by digital input (DI) signals.
	Velocity - Torque	S-T	Either S or T control can be selected by digital input (DI) signals.

*Sure*Servo™ AC Servo System Specifications

Drive Specifications

General Drive Specifications	
Permissible Frequency	50 / 60Hz ±5%
Encoder Resolution / Feedback Resolution	2500 lines / 10000 ppr
Control of Main Circuit	SVPWM (Space Vector Pulse Width Modulation) Control
Tuning Modes	Easy / Auto / Manual
Dynamic Brake	Built-in control
Analog Monitor Outputs (2)	Monitor signal can be set by parameters (Output voltage range: ±8V; Resolution: 12.8 mV/count)
8 Programmable Digital Inputs (45 selectable functions)	Servo enable, Alarm reset, Gain switching, Pulse counter clear, Fault Stop, CW/CCW overtravel
	Internal parameter selection, Torque limit activation, Velocity limit activation, Control mode selection
Scalable Encoder Output	Encoder signal output A, /A, B, /B, Z /Z, Line Driver
5 Programmable Outputs (9 selectable indicators)	Servo ready, Servo On, Low Velocity, Velocity reached, In Position, Torque limiting, Servo fault, Electromagnetic brake control, Home search completed
Communication Interface	RS-232 / RS-485 / RS-422 / Modbus ASCII & RTU up to 115k Baud
Protective Functions	Overcurrent, Overvoltage, Undervoltage, Overload, Excessive velocity/position error, Encoder error, Regeneration error, Communication error
Installation Site	Indoor location (free from direct sunlight), no corrosive liquid and gas (far away from oil mist, flammable gas, dust)
Altitude	Altitude 1000m [3281 ft] or lower above sea level
Operating Temperature	0 to 55 °C [32 to 131 °F] (If operating temperature is above 55 °C, forced cooling is required)
Storage Temperature	-20° to 65°C (-4° to 149°F)
Humidity	0 to 90% (non-condensing)
Vibration	9.81m/s^2 (1G) less than 20Hz, 5.88m/s^2 (0.6G) 20 to 50Hz
Protection	IP 20
Agency Approvals	CE; UL listed (U.S. and Canada)

For long-term reliability, the ambient temperature of SureServo systems should be under 45° C (113° F).

Servo Drive Heat Loss Specifications *								
Drive	**SVA-2040**			**SVA-2100**			**SVA-2300**	
Motor	SVL-201(B)	SVL-202(B)	SVL-204(B)	SVL-207(B)	SVL-210(B)	SVM-210(B)	SVM-220(B)	SVM-230(B)
Drive Heat Loss	12W	15W	20W	35W	45W	50W	75W	80W
**** Drive heat loss varies depending upon which motor is connected to the drive.***								

Model and Mode Specific Drive Specifications					
	AC Servo Model		**SVA-2040**	**SVA-2100**	**SVA-2300**
	Voltage Phase		Single-phase or Three-phase		Three-phase
	Voltage & Frequency Range		3ϕ: 170~255V @ 50/60Hz ±5% 1ϕ: 200~255V @ 50/60Hz ±5%		170~255V 50/60Hz ±5%
	Main Circuit Input Current[1]	**Single Phase**	3.4A @ 400W	8.0A @ 1kW	-
		Three Phase	2.6A @ 400W	6.2A @ 1kW	13.6A @ 3kW
	Main Circuit Inrush Current		44A	77A	87A
	Main Circuit Power Cycling		maximum 1 power cycle per minute		
	Control Circuit Current & Voltage[1]		43mA @ 200~255Vac 1ϕ		
	Control Circuit Inrush Current		32A maximum		
	Cooling System		Natural Air Circ.	Internal Cooling Fan	
	Heat Loss		varies with motor; refer to separate table on previous page		
	Weight		1.5kg	2.0kg	3.0kg
Position Control Mode	**Max. Input Pulse Frequency**		Max. 500kPPS (Line driver); Max. 200kPPS (Open collector)		
	Pulse Type		Pulse + Direction, A phase + B phase Quadrature, CCW pulse + CW pulse		
	Command Source		External pulse train / Onboard indexer		
	Smoothing Strategy		Low-pass and P-curve filter		
	Electronic Gear		Electronic gear N/M multiple N: 1~32767, M: 1~32767(1/50<N/M<200)		
	Torque Limit Operation		Set by parameters or by analog input		
	Feed Forward Compensation		Set by parameters		
Velocity Control Mode	**Analog Input Command**	**Voltage Range**	Bipolar ±10 VDC		
		Input Resistance	10kΩ		
		Time Constant	2.2μs		
		Resolution	(Varies with input voltage) 13 bits @ 0~1V; 13 or 10 bits @ 1~2V; 10 bits @ 2~10V		
	Speed Control Range		1:5000		
	Command Source		External analog signal / Onboard indexer		
	Smoothing Strategy		Low-pass and S-curve filter		
	Torque Limit Operation		Set by parameters or via analog input		
	Frequency Response Characteristic		Maximum 450Hz		
	Speed Accuracy (at rated rotation speed)		0.01% or less at 0 to 100% load fluctuation		
			0.01% or less at ±10% power fluctuation		
			0.01% or less at 0 to 50°C ambient temperature fluctuation		
Torque Control Mode	**Analog Input Command**	**Voltage Range**	Bipolar ±10 VDC		
		Input Resistance	10kΩ		
		Time Constant	2.2μs		
		Resolution	10 bits		
	Permissible Time for Overload		8 sec. under 200% rated output		
	Command Source		External analog signal / Onboard indexer		
	Smoothing Strategy		Low-pass filter		
	Speed Limit Operation		Set by parameters or via analog input		

Note 1: Refer to Chapter 2, "Installation and Wiring" for recommended circuit protection information.

Motor Specifications

Motor Specifications										
Inertia Range			Low					Medium		
Model Name: SVx-xxx*			SVL–201(B*)	SVL–202(B*)	SVL–204(B*)	SVL–207(B*)	SVL–210(B*)	SVM–210(B*)	SVM–220(B*)	SVM–230(B*)
Rated output power		W	100	200	400	750	1000	1000	2000	3000
Rated torque		N·m	0.318	0.64	1.27	2.39	3.3	4.8	9.4	14.3
		lb·in	2.8	5.7	11.2	21.2	29.2	42.5	83.2	125.7
Maximum torque		N·m	0.95	1.91	3.82	7.16	9.9	15.7	23.5	35.8
		lb·in	8.4	16.9	33.8	63.4	87.6	138.9	208.0	316.8
Rated speed		rpm	3000					2000		
Max. speed		rpm	5000			4500		3000		
Rated current		A	1.1	1.7	3.3	5.0	6.8	5.6	13.1	17.4
Max. current		A	3.0	4.9	9.3	14.1	18.7	17.6	31.4	42.3
Drive input current		1ϕ A	1.0	1.7	3.4	5.9	8.0	8.0	-	
		3ϕ A	0.8	1.3	2.6	4.7	6.2	6.2	9.1	13.6
Max. radial shaft load		N	78.4	196		343	490		784	
		lb	18	44		77	110		176	
Max. thrust shaft load		N	39.2	68.6		98			392	
		lb	9	15		22			88	
Brake (SVx-xxxB only)	Voltage	VDC	24							
	Current	ADC	0.21	0.38		0.4	0.75	0.83	1.45	1.67
	Holding Torque	N·m	0.32	1.27		2.55	9.3	7.5	32.0	50.0
		lb·in	2.83	11.24		22.57	82.3	66.38	283.2	442.5
Rotor inertia w/o brake		kg·m²	0.03E-4	0.18E-4	0.34E-4	1.08E-4	2.6E-4	5.98E-4	15.8E-4	43.3E-4
		lb·in·s²	0.27E-4	1.59E-4	3.0E-4	9.56E-4	23.0E-4	52.9E-4	139.8E-4	383.2E-4
Rotor inertia with brake		kg·m²	0.06E-4	0.28E-4	0.44E-4	1.32E-4	3.1E-4	8.8E-4	27.8E-4	56.3E-4
		lb·in·s²	0.53E-4	2.48E-4	3.9E-4	11.7E-4	27.4E-4	77.9E-4	246.0E-4	498.3E-4
Mechanical time constant		ms	0.6	0.9	0.7	0.6	1.7	1.4	1.6	0.9
Static friction torque		N·m	0.02	0.04		0.08	0.49	0.29	0.98	
Torque constant-KT		N·m/A	0.32	0.39	0.4	0.5	0.56	0.91	0.77	0.86
Voltage constant-KE		V/rpm	33.7E-3	41.0E-3	41.6E-3	52.2E-3	58.4E-3	95.71E-3	81.1E-3	90.5E-3
Armature resistance		Ω	20.3	7.5	3.1	1.3	2.052	1.98	0.6	0.162
Armature inductance		mH	32	24	11	6.3	8.4	13.2	6.1	2.3

Motor Specifications table continued next page.

Motor Specifications (continued)									
Inertia Range		**Low**					**Medium**		
Model Name: SVx-xxx*		**SVL–201(B*)**	**SVL–202(B*)**	**SVL–204(B*)**	**SVL–207(B*)**	**SVL–210(B*)**	**SVM–210(B*)**	**SVM–220(B*)**	**SVM–230(B*)**
Electrical time constant	**ms**	1.6	3.2	3.2	4.8	4.1	6.7	10.1	14.2
Motor Type**		Brushless, AC, permanent magnet							
Insulation class		Class F							
Insulation resistance		>100MΩ , 500VDC							
Insulation strength		1500 VAC, 50Hz, 60 seconds							
Ambient temperature range		0 to 40°C (32°F to 104°F)							
Operating temperature (measured case temp)		70°C (158°F)							
Maximum operating temperature (measured case temp)		70°C + 40°C = 110°C (230°F)							
Storage temperature		-20 to 65°C (-4 to 149°F)							
Operating humidity		20 to 90% RH (non-condensing)							
Storage humidity		20 to 90% RH (non-condensing)							
Vibration / Shock		2.5G / 5.0G							
Environmental rating		IP65 motor body; IP40 shaft; IP20 connector				IP65 (requires *Sure*Servo cables)			
Weight without brake	**kg**	0.5	0.9	1.3	2.5	4.7	4.8	12.0	17.0
	lb	1.1	1.98	2.87	5.5	10.36	10.58	26.46	37.48
Weight with brake	**kg**	0.7	1.4	1.8	3.4	6.3	7.5	19.0	24.0
	lb	1.54	3.09	3.97	7.5	13.89	16.53	41.89	52.9
Agency Approvals		CE; UL recognized (U.S. and Canada)							

**** Motor part numbers ending in "B" include an integral brake that is normally engaged. Disengage the brake by energizing the brake coil in the motor. (For brake wiring details, refer to CN1 I/O Wiring Diagrams "CN1-DO_5" & "CN1-DO_6" in the "Installation and Wiring" chapter of this user manual.)***

***** Motor employs rare earth magnets composed of Neodymium (Nd), Iron (Fe), and Boron (B).***

NOTE: U.S. customary units are for reference only.

Motor Velocity-Torque Curves

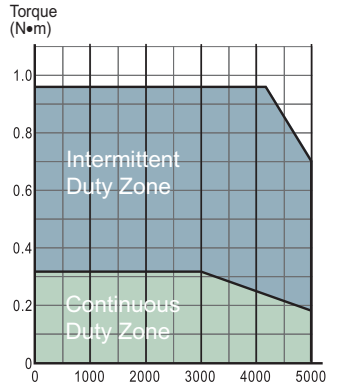

100W Low Inertia
SVL-201

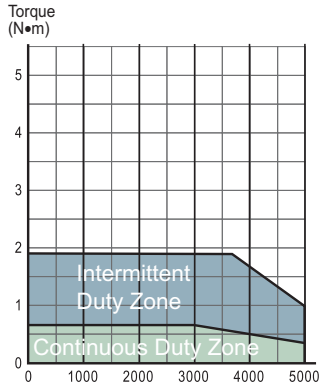

200W Low Inertia
SVL-202

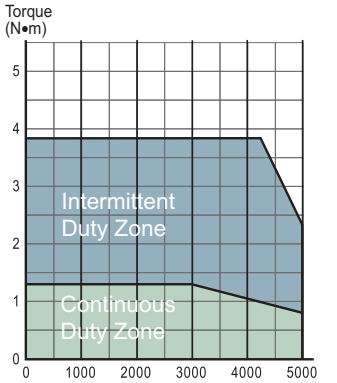

400W Low Inertia
SVL-204

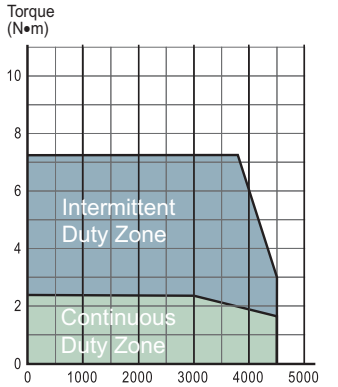

750W Low Inertia
SVL-207

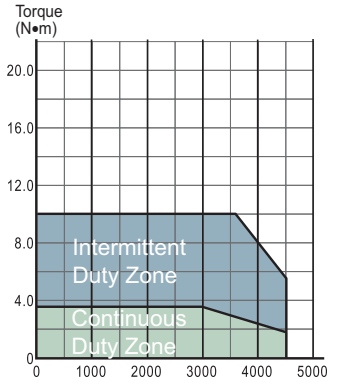

1kW Low Inertia
SVL-210

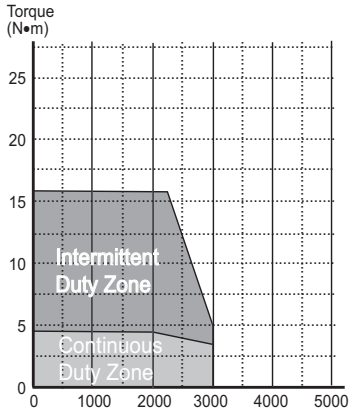

1kW Medium Inertia
SVM-210

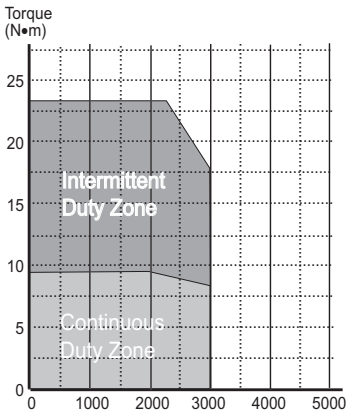

2kW Medium Inertia
SVM-220

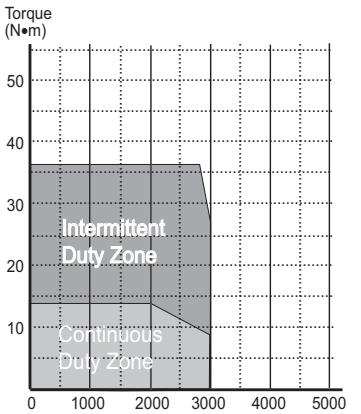

3kW Medium Inertia
SVM-230

Motor Overload Characteristics

Overload Protection Function

Overload protection is a built-in protective function to prevent a motor from overheating.

Common Overload Causes and Conditions

1. Servo system operated for several seconds above 100% torque.
2. Frequent acceleration/deceleration cycles of high inertia loads.
3. The power cable or encoder cable not making a solid connection.
4. Improper or aggressive tuning adjustments, causing motor vibration, noise, and/or overheating.
5. Trying to run the system without releasing the internal holding brake on brake motors.

Load and Operating Time

SVL-201, SVL-202, SVL-204, SVL-207

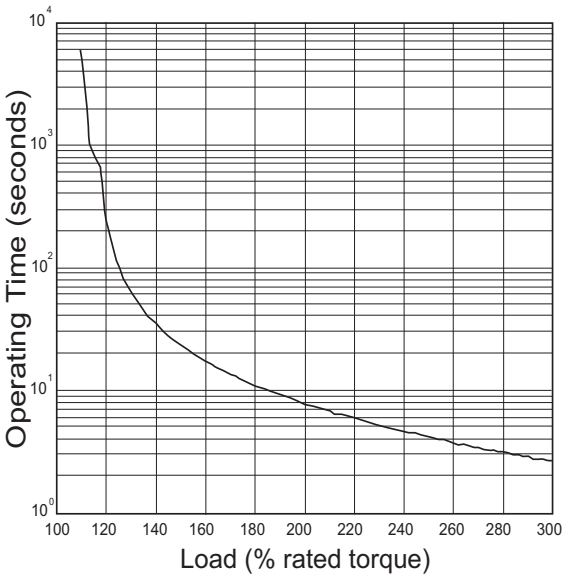

Load	Operating Time
120%	263.8 s
140%	35.2 s
160%	17.6 s
180%	11.2 s
200%	8 s
220%	6.1 s
240%	4.8 s
260%	3.9 s
280%	3.3 s
300%	2.8 s

SVM-210, SM-220, SVM-230

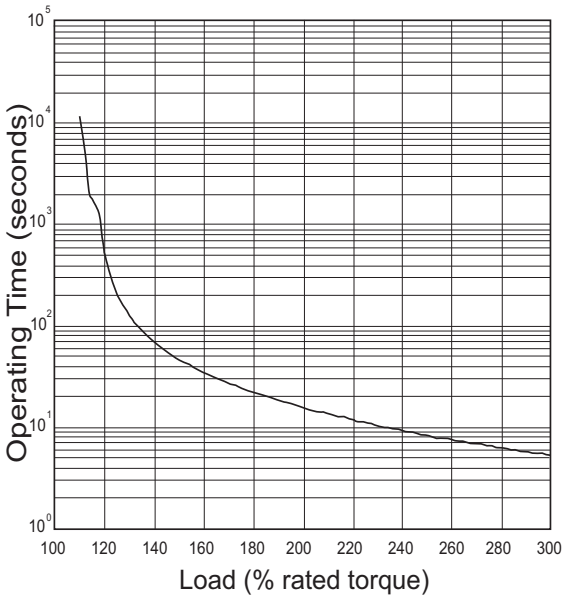

Load	Operating Time
120%	527.6 s
140%	70.4 s
160%	35.2 s
180%	22.4 s
200%	16 s
220%	12.2 s
240%	9.6 s
260%	7.8 s
280%	6.6 s
300%	5.6 s

BLANK
PAGE

Installation and Wiring

Chapter 2

In This Chapter ...

Storage Conditions 2–2
Installation 2–3
- Servo Drive Mounting 2–3
- Servo Drive Minimum Clearances and Air Flow 2–4
- Servo Motor Mounting 2–4

Dimensions 2–5
- Servo Drive Dimensions 2–5
- Servo Motor Dimensions 2–8
- Accessory I/O Terminal Module Dimensions 2–11

Circuit Connection Warnings 2–12
Servo Drive Terminals 2–13
- Power Terminals 2–14
- CN1 – Input/Output Terminal 2–15
- CN2 – Encoder Terminal 2–20
- CN3 – Serial Communication Terminal 2–21

Servo Motor Terminal Connections 2–22
- Power Connections 2–22
- Encoder Connections 2–23

Wiring Diagrams 2–24
- Connecting to Peripheral Devices 2–24
- Power Wiring Connections 2–25
- Wiring for Position (Pr & Pt) Control Modes 2–26
- Wiring for Velocity and Torque Control Modes 2–27
- CN1 Input/Output Wiring Diagrams 2–28
- CN2 Encoder Wiring Diagram 2–33
- CN3 Serial Communication Wiring Diagram 2–33

Cables and Terminal Connectors 2–34
- Drive, Motor, and Cable Combinations 2–34
- Drive Terminal Connection Module & Cables 2–35

Servo Drive Circuit Protection 2–36

Storage Conditions

The servo system components should be kept in their shipping cartons before installation. In order to retain the warranty coverage, the components should be stored properly when they will not be used for an extended period of time. Some storage suggestions are:

- Store in a clean and dry location free from direct sunlight.
- Store within the ambient storage temperature and humidity ranges stated in the specifications table, Chapter 1, “Getting Started”.
- Store components properly packaged and placed on a durable surface.
- Do not store in a place subjected to corrosive gases and liquids.

Installation

Improper installation of the AC servo system will greatly reduce its life. Be sure to observe the following precautions when selecting a mounting location:

WARNING: Failure to observe these precautions may cause damage and void the warranty!

- Do not mount the servo drive and motor near heat-radiating elements or under direct sunlight.
- Do not mount the servo drive and motor in a place subjected to corrosive gases or liquids, or airborne dust or metallic particles.
- Do not mount the servo drive and motor in a place subjected to high temperature or high humidity that exceeds the ratings shown in the specifications table, Chapter 1, “Getting Started”. Keeping the drive ambient temperature below 45°C (113°F) will provide even longer term reliability.
- Do not mount the servo drive and motor in a place subjected to excessive vibration and shock.
- Do not mount the servo drive and motor in a place subjected to high electromagnetic radiation, high voltage, or high frequency.
- Do not carry the servo motor by it’s shaft or cables.
- Motor shafts are keyless. Use compression couplings. Marring or deforming the shaft with set screws or pins will void the 30-day return policy.
- Do not hit the motor shaft or encoder. Such impact can damage bearing surfaces and the disk inside the encoder.

WARNING: Servo drives and motors generate large amounts of heat, which may cause damage. Allow sufficient space around the units for heat dissipation and, if necessary, provide auxiliary cooling in order to prevent exceeding the specified maximum ambient operating temperatures.

Servo Drive Mounting

Mount the AC servo drive in a vertical position on a dry and solid surface such as inside a NEMA control panel. Do not install the drive in a horizontal position. The mounting surface should be capable of conducting heat away from the drive. Allow space around the drive for heat dissipation and for wiring.

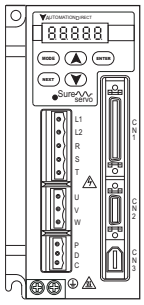

CORRECT

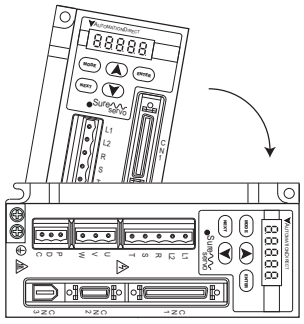

INCORRECT

Servo Drive Minimum Clearances and Air Flow

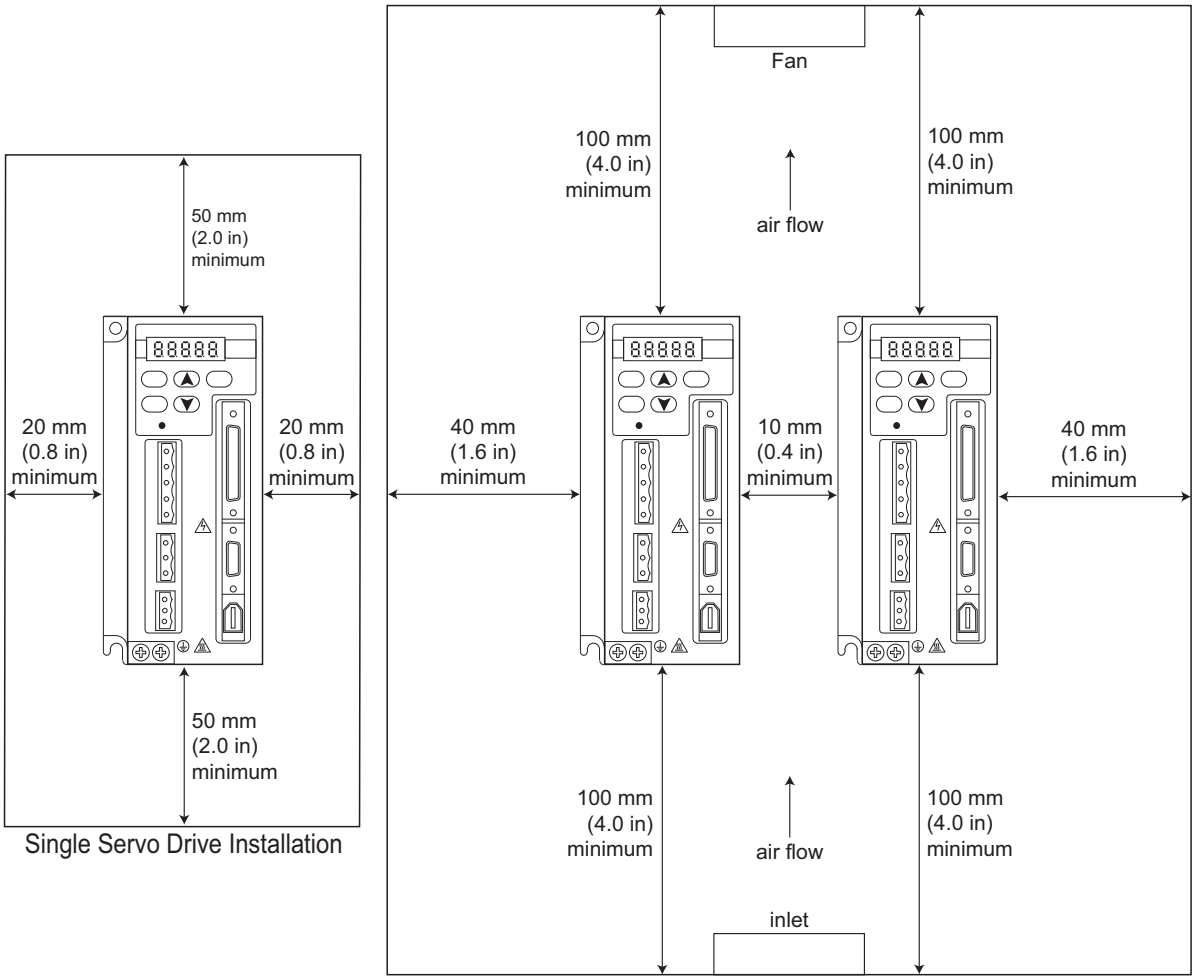

Servo Motor Mounting

The *Sure*Servo motor can be mounted in any orientation. However, mount it in a position that prevents the mechanical drive unit oil from penetrating the motor housing through the shaft seal. The motor cable connections should point downward, and the cables should have drip loops to prevent liquids from entering the motor through the connectors. The motor should be firmly mounted to a dry, solid, and well grounded surface that will conduct heat away from the motor.

Do not mount the motor in an orientation that will allow gearbox oil, etc. to penetrate the motor shaft seal, or that will allow liquids to run down the cables to the connectors.

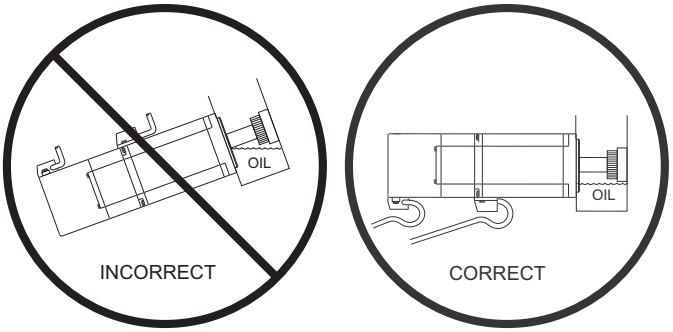

Dimensions

Servo Drive Dimensions

Part Number: SVA-2040

UNITS: mm (in)
(Inch values are for reference only.)

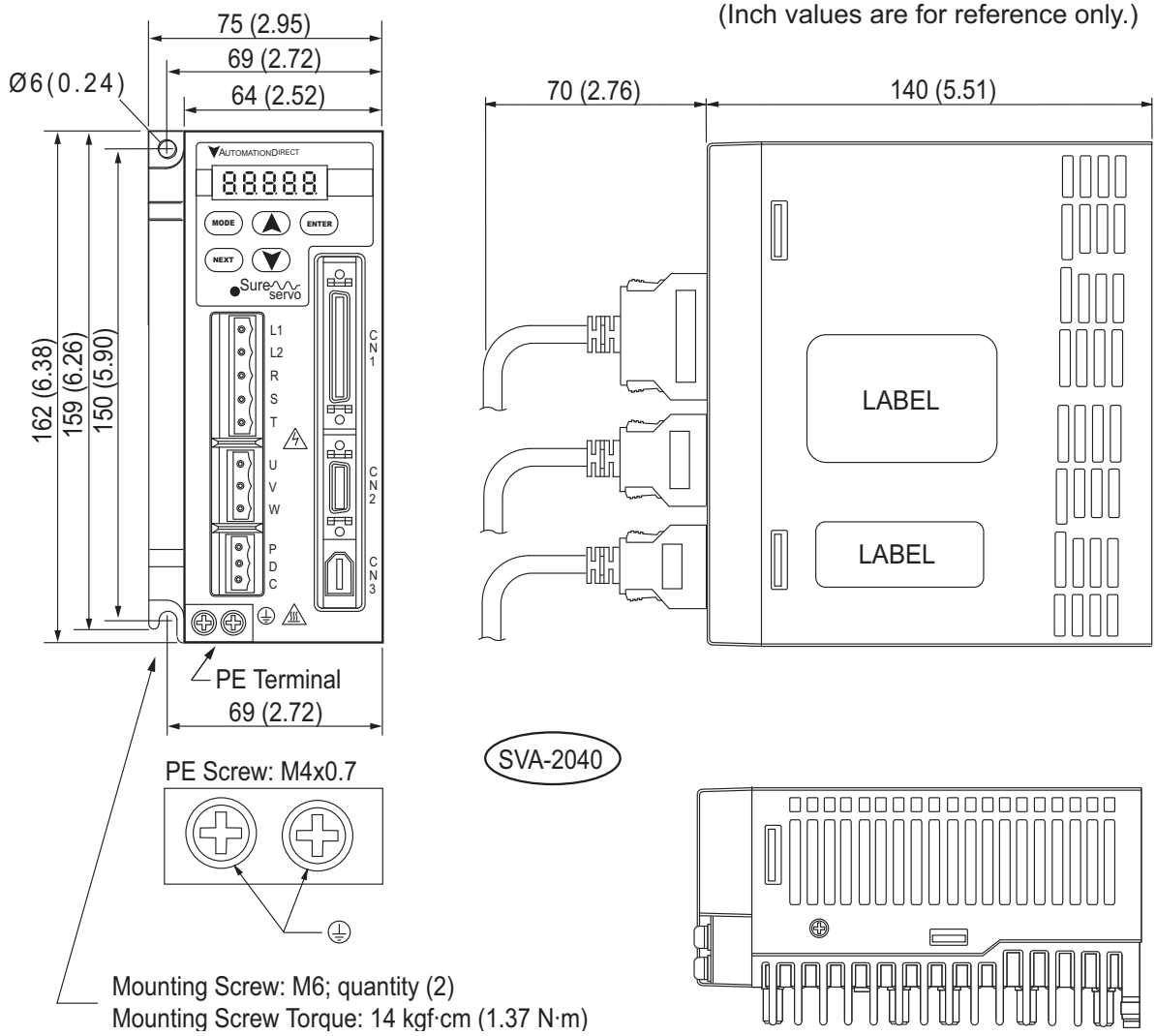

Recommended user supplied mounting screw is M6.

Servo Drive Dimensions (continued)

Part Number: SVA-2100

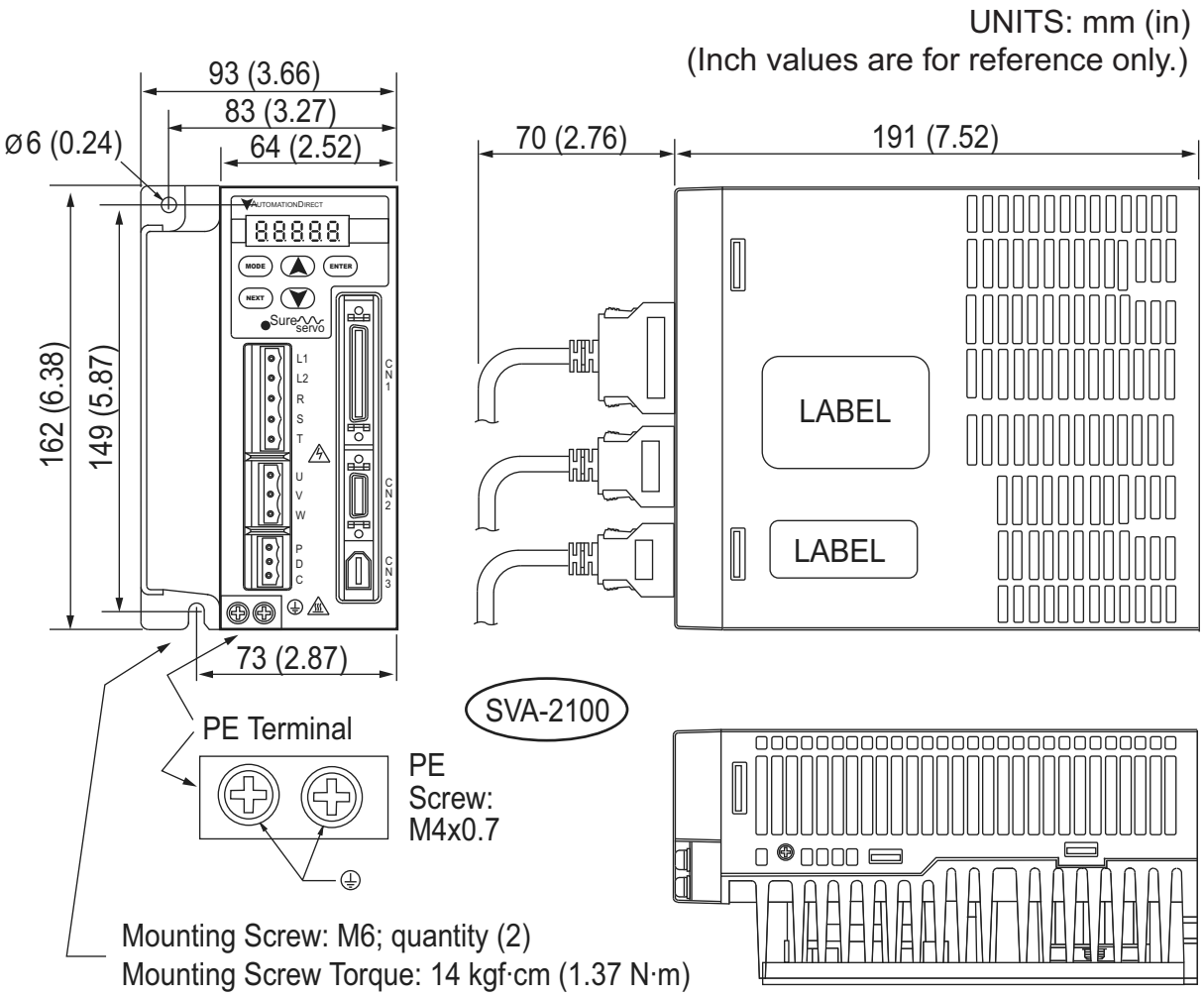

Recommended user supplied mounting screw is M6.

Servo Drive Dimensions (continued)

Part Number: SVA-2300

UNITS: mm (in)
(Inch values are for reference only.)

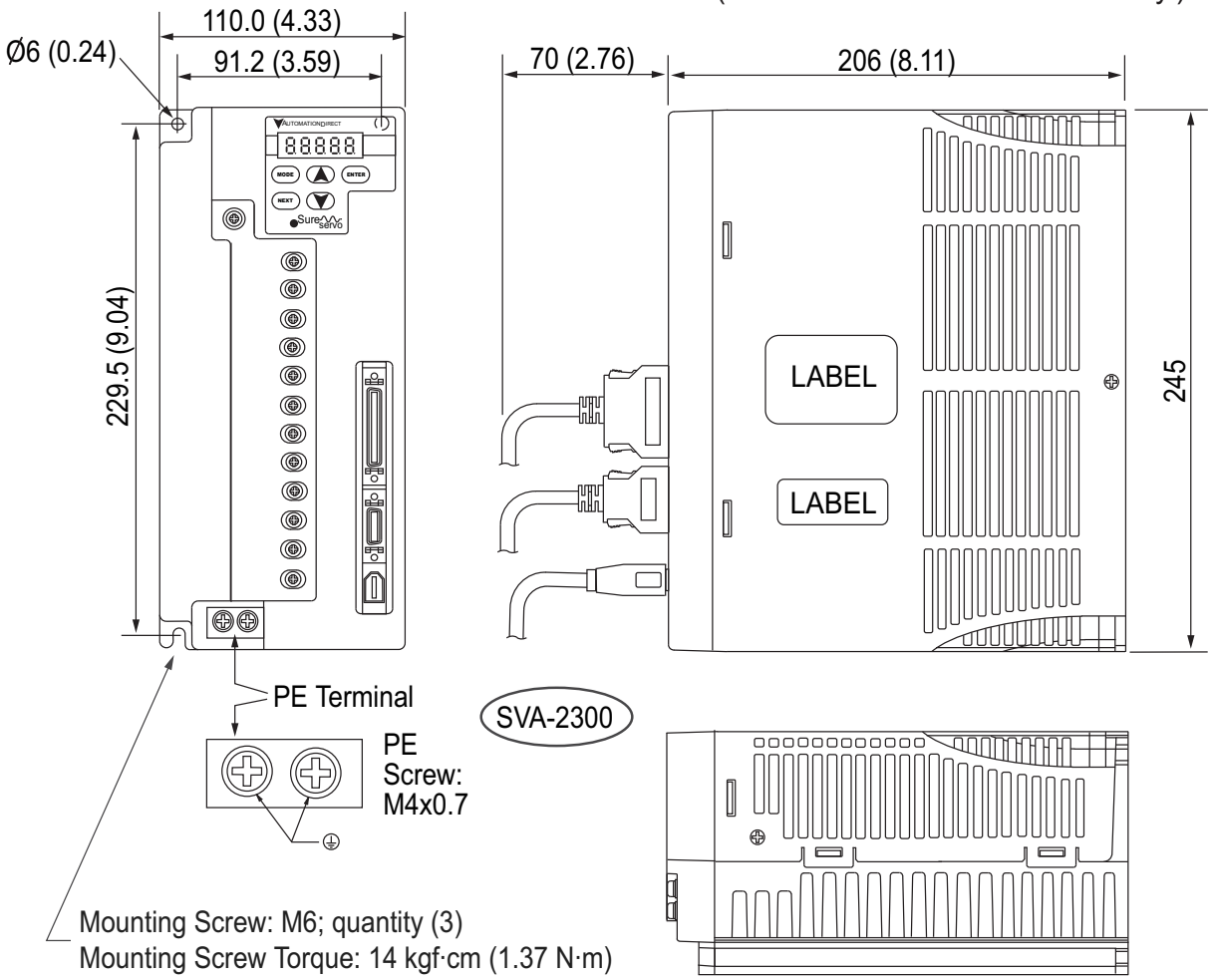

Recommended user supplied mounting screw is M6.

Servo Motor Dimensions

Low Inertia Part Numbers: SVL-201(B), -202(B), -204(B), -207(B)

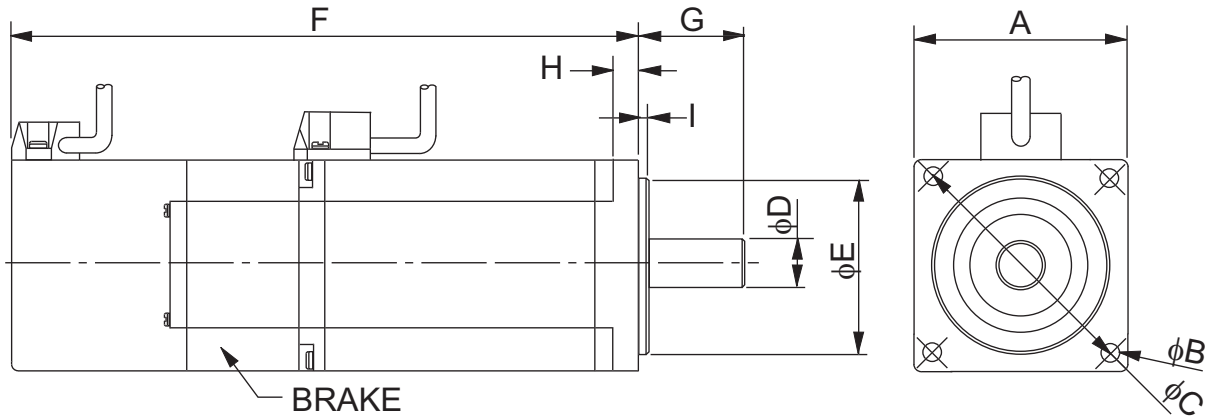

SureServo Motor Dimensions – 100W-750W Low Inertia				
Dimension	**SVL-201(B)**	**SVL-202(B)**	**SVL-204(B)**	**SVL-207(B)**
A	40 [1.575]	60 [2.362]		80 [3.15]
B	4.5 [0.1772]	5.5 [0.2165]		6.6 [0.2598]
C	46 [1.811]	70 [2.756]		90 [3.543]
D	8 +0.0/-0.009 (8h6)	14 +0.0/-0.011 (14h6)		19 +0.0 -0.013 (19h6)
E	30 +0.0/-0.021 (30h7)	50 +0.0/-0.025 (50h7)		70 +0.0/-0.030 (70h7)
F (w/o brake)	100.1 [3.941]	102.4 [4.032]	124.4 [4.898]	135 [5.315]
F (with brake)	135.7 [5.343]	137 [5.394]	159 [6.26]	171.6 [6.756]
G	25 [0.98]	30 [1.18]		35 [1.38]
H	5 [0.197]	6 [0.236]		8 [0.315]
I	2.5 [0.098]	3 [0.118]		
Cable length	300mm (12 inches)			

UNITS: mm [in]
(Inches are for reference only; not included on diameter dimensions for accuracy.)

Servo Motor Dimensions (continued)

Low Inertia Part Number: SVL-210(B)

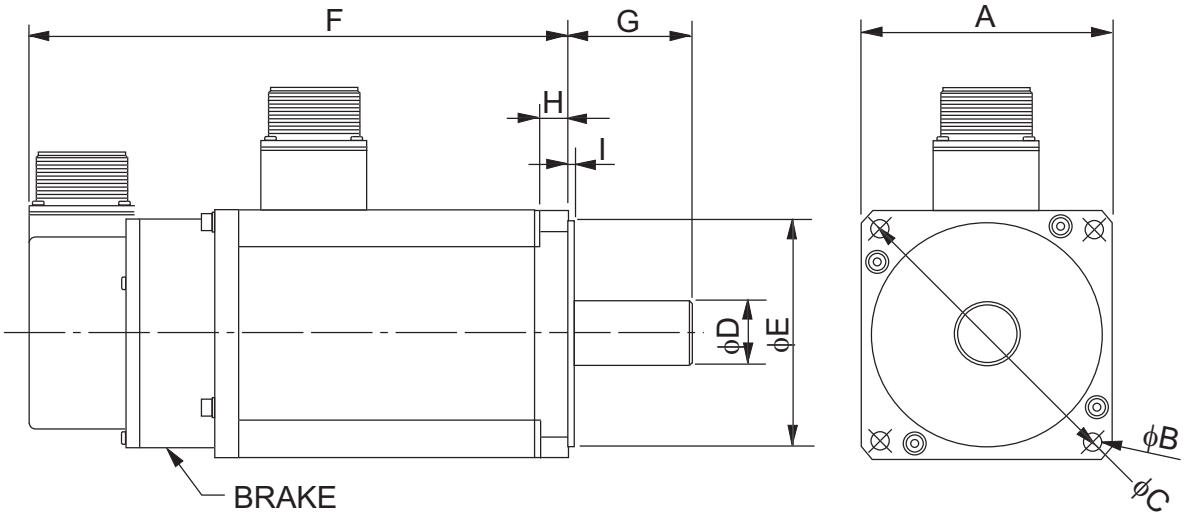

SureServo Motor Dimensions – 1000W Low Inertia	
Dimension	**SVL-210(B)**
A	100 [3.937]
B	9 [0.3543]
C	115 +0.2/-0.2 [4.258]
D	22 +0.0/-0.013 (22h6)
E	95 +0.0/-0.035 (95h7)
F (w/o brake)	158 [6.22]
F (with brake)	190 [7.48]
G	45 [1.77]
H	17 [0.669]
I	7 [0.28]
UNITS: mm [in] (Inches are for reference only; not included on diameter dimensions for accuracy.)	

Servo Motor Dimensions (continued)

Medium Inertia Part Numbers: SVM-210(B), 220(B), 230(B)

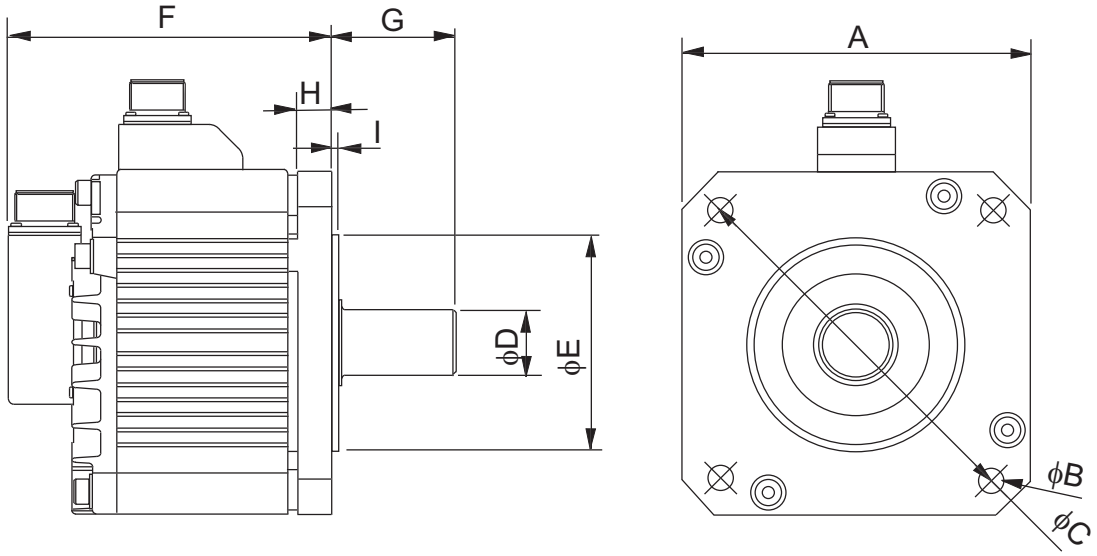

SureServo Motor Dimensions – 1000W-3000W Medium Inertia			
Dimension	**SVM-210(B)**	**SVM-220(B)**	**SVM-230(B)**
A	130 [5.118]	180 [7.087]	
B	9 [0.3543]	13.5 [0.5315]	
C	145 +0.2/-0.2 [5.709]	200 +0.2/-0.2 [7.874]	
D	22 +0.0/-0.013 (22h6)	35 +0.0/-0.016 (35h6)	
E	110 +0.0/-0.035 (110h7)	114.3 +0/-0.035 (114.3h7)	
F (w/o brake)	143 [5.63]	164 [6.457]	212 [8.35]
F (with brake)	181 [7.126]	213 [8.386]	258 [10.16]
G	55 [2.17]	75 [2.95]	
H	15 [0.591]	20 [0.787]	
I	4 [0.157]		
UNITS: mm [in] ***(Inches are for reference only; not included on diameter dimensions for accuracy.)***			

Accessory I/O Terminal Module Dimensions

ZIPLink Terminal Module Part Number: ZL-RTB50

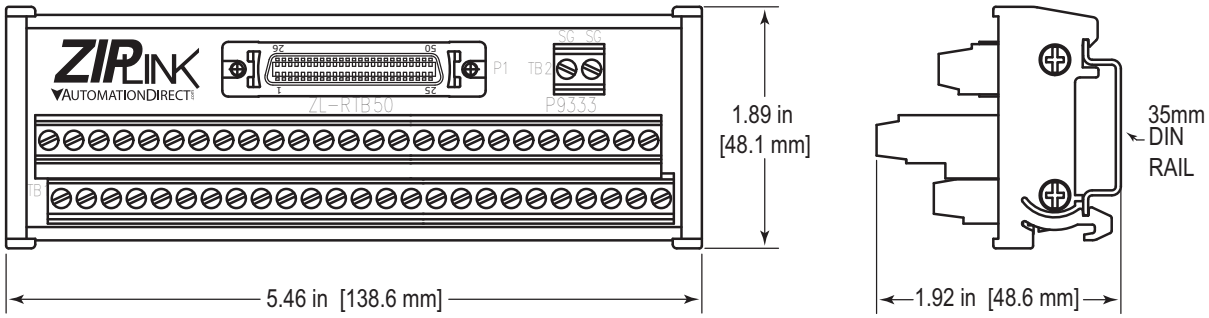

Circuit Connection Warnings

DANGER!

WARNING: HAZARDOUS VOLTAGE! Before making any connection to the AC servo drive, disconnect all power to the drive, and wait until the charge LED goes out.

WARNING: Any electrical or mechanical modification to this equipment without prior written consent of AutomationDirect.com, Inc. will void all warranties, may result in a safety hazard, and may void the UL listing.

WARNING: Do not connect AC input power to the U, V, and W output terminals. This will damage the AC servo drive.

Wiring Notes: PLEASE READ PRIOR TO INSTALLATION.

1. During installation, follow all local electrical, construction, and safety codes for the country in which the AC servo system is to be installed.
2. Make sure that the power source is capable of supplying the correct voltage and required current to the AC servo drive.
3. Make sure that the appropriate protective devices (circuit breaker or fuses) are connected between the power supply and the AC servo drive. (Refer to the "Servo Drive Circuit Protection" section in this chapter.)
4. The power cables connected to the R, S, T and U, V, W terminals should be run separately from the encoder and other signal and control cables. Separate them by at least 30 cm (11.81"). If they must cross, they should cross at 90 degree angles to each other.
5. Do not attach or remove wiring when power is applied to the AC servo drive, or while the drive's "charge" LED is still on. (Even after power is disconnected from the drive, a residual voltage may remain inside the drive until the "charge" LED goes out.)
6. Do not monitor the signals on the circuit board while the AC servo drive is in operation.
7. Make sure that the leads are connected correctly and the AC servo components are properly grounded.
8. Use ground leads that comply with AWG/MCM standards and keep them as short as possible. (Resistance of the cable should not exceed 0.1Ω.)
9. Multiple AC servo units can be installed in one location. All of the units should be grounded directly to a common ground terminal. Do NOT "daisy chain", or connect the ground wires in series. **Make sure there are no ground loops.** Large gauge ground wires with many small strands are recommended (i.e: 4 AWG).

10. If Emergency Stop is required, a contactor wired into the drive power circuit and controlled by the E-stop, and a servo motor with brake are recommended.

Servo Drive Terminals

Servo Drive Terminals			
Terminal Symbol	**Terminal Description**	**Remarks**	
L1, L2	Control Circuit*	Used to connect single-phase AC control circuit power. (Control circuit uses same voltage as the main circuit.)	
N	Negative Side of DC Bus*	Model SVA-2300 only. No wiring connection required.	
R, S, T	Main Circuit*	Used to connect single-phase or three-phase AC main circuit power, depending upon drive model. For three-phase models, connect power to terminals R, S, and T. For single-phase power, connect power to terminals R and S.	
U, V, W	Servo Motor Output*	Used to connect servo motor	
		Terminal Symbol	Wire Color
		U	Red
		V	White
		W	Black
P, D, C	Regenerative resistor*	For Internal Resistor	Jumper between P and D. Open between P and C (no jumper).
		For External Resistor	Regenerative resistor between P and C. Open between P and D (no jumper).
⏚	Ground (FG)	Used to connect grounding wire of power supply & servo motor.	
CN1	I/O	Used to connect PLCs or control signals	
CN2	Encoder	Used to connect encoder of servo motor.	
		Terminal Symbol	Color
		A	Blue
		/A	Blue/White
		B	Green
		/B	Green/White
		Z	Yellow
		/Z	Yellow/White
		+5V	Red
		GND	Black
CN3	Communication	Used to connect personal computer or MODBUS capable controller. (MODBUS RTU or ASCII protocol)	

**** With the exception of the SVA-2300, removable screwless connectors and wiring tool are provided with the drives for the following terminals: Control Circuit, Main Circuit, Servo Motor Output, and Regenerative Resistor. The largest drive, SVA-2300, has all screw terminals.***

Power Terminals

Input and Control Power Terminal Connections (L1, L2, (N), R, S, T)

Motor Output Power Terminal Connections (U, V, W)

Regenerative Resistor Terminal Connections (P, D, C)

Removable Wiring Terminals Included With SVA-2040		
Input & Control Power	L1, L2, R, S, T	WAGO # 231-205/026-000
Motor Output Power	U, V, W	WAGO # 231-203/026-000
Regenerative Resistor	P, D, C	WAGO # 231-103/026-000

Removable Wiring Terminals Included With SVA-2100		
Input & Control Power	L1, L2, R, S, T	WAGO # 231-205/026-000
Motor Output Power	U, V, W	WAGO # 231-203/026-000
Regenerative Resistor	P, D, C	WAGO # 231-103/026-000

Screw Terminals Included With SVA-2300		
Input & Control Power	L1, L2, N, R, S, T	non-removable screw terminals
Motor Output Power	U, V, W	
Regenerative Resistor	P, D, C	

CN1 – Input/Output Terminal

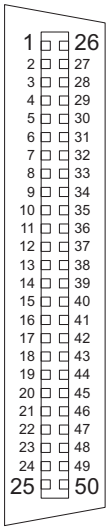

The CN1 connector provides an interface for three signal groups:

1) Analog signals for velocity and torque control, encoder reference from the motor, pulse/direction inputs, and reference voltages.
2) Programmable digital inputs.
3) Programmable digital outputs.

CN1 Terminal Connection

CN1 conveniently connects to AutomationDirect dedicated cables and terminal modules as shown in the "Cables and Terminal Connectors" section of this chapter, or to 3M part #10150-3000VE connector and #10350-52A0-008 shell.

CN1 Terminal Signal Identification

2	DO3-	Digital Output
4	DO2-	Digital Output
6	DO1-	Digital Output
8	DI4	Digital Input
10	DI2	Digital Input
12	GND	Power VCC Ground AI
14	NC	No Connection
16	MON1	Analog Monitor Output 1
18	T_REF	Analog Torque Input
20	VCC	Power 12V Source
22	/OA	Position Pulse /A Output
24	/OZ	Position Pulse /Z Output

1	DO4+	Digital Output
3	DO3+	Digital Output
5	DO2+	Digital Output
7	DO1+	Digital Output
9	DI1	Digital Input
11	COM+	Power Common DI & DO
13	GND	Power VCC Ground AI
15	MON2	Analog Monitor Output 2
17	VDD	Power 24V Source
19	GND	Power VCC Ground AI
21	OA	Position Pulse A Output
23	/OB	Position Pulse /B Output
25	OB	Position Pulse B Output

27	DO5-	Digital Output
29	NC	No Connection
31	DI7	Digital Input
33	DI5	Digital Input
35	PULL HI	Position Pulse Input
37	SIGN	Position Pulse Input
39	NC	No Connection
41	PULSE	Position Pulse Input
43	/PULSE	Position Pulse Input
45	COM-	Power VDD Ground DI & DO
47	COM-	Power VDD Ground DI & DO
49	COM-	Power VDD Ground DI & DO

26	DO4-	Digital Output
28	DO5+	Digital Output
30	DI8	Digital Input
32	DI6	Digital Input
34	DI3	Digital Input
36	/SIGN	Position Pulse Input
38	NC	No Connection
40	NC	No Connection
42	V_REF	Analog Velocity Input
44	GND	Power VCC Ground AI
46	NC	No Connection
48	OCZ	Encoder Z Pulse Open Collector Output
50	OZ	Encoder Z Pulse Line Driver Output

The terminals marked NC should be left unconnected (no connection). Do not connect any external wiring to the NC terminals, or the drive could be damaged. The NC terminals are used internally by the servo drive.

CN1 Terminal Signals Functions – Input Connections

The CN1 "General Signals" are set by the factory, and cannot be changed.

CN1 General Signals				
Signal		**Pin No**	**Function**	**Wiring Diagram**
Analog Signal Input	V_REF	42	External velocity command (±10V) indicates ±P1-40, Analog Full Scale Velocity Command (gain). P4-22 adds Analog Velocity Input Offset. Motor rpm limited by P1-55, max. velocity limit. (resolution: 13 bits @ 0~1V; 13~10 bits @ 1~2V; 10 bits @ 2~10V)	CN1-3
	T_REF	18	External torque command (±10V) indicates ±P1-41, Analog Full Scale Torque Command (gain). P4-23 adds Analog Torque Input Offset. (10-bit resolution)	CN1-3
Analog Monitor Output	MON1 MON2	16 15	Motor operation status: Motor characteristics such as velocity and current can be represented by analog voltages. The drive provides two output channels which can be configured with parameter P0-03 to output the desired characteristic. This output is wired between the MON and GND terminal pins. Bipolar ±8VDC @ 1mA; Resolution 12.8 mV/count	CN1-13
Position Pulse Input	PULSE /PULSE SIGN /SIGN	41 43 37 36	The *Sure*Servo drive has two kinds of position pulse inputs: Line driver (max 500kpps) and Open-collector / Push-pull / PNP (max 200kpps). There are three types of pulse commands: Pulse + Direction, A phase + B phase (quadrature) and CCW pulse + CW pulse. These three pulse types can be selected by using parameter P1-00.	CN1-4 CN1-5 CN1-6
	PULL HI	35	When using Open-collector inputs, this terminal must be connected to a pull-up power supply.	CN1-4
Position Pulse Output	OA /OA	21 22	Encoder signal output A, B, Z. This line driver output is a scalable representation of the motor encoder.	CN1-14 CN1-15
	OB /OB	25 23		
	OZ /OZ	50 24		
Power	VDD	17	VDD is +24VDC provided by the drive to be used for DI power. Maximum available current is 500mA.	-
	COM+ COM–	11 45 47 49	COM+ is the common voltage input end of DI and DO signal. When using VDD, VDD should be connected to COM+. If not using VDD, users have to add an applied power (+12VDC to +24VDC). The positive end of this applied power should be connected to COM+, and the negative end of this applied power should be connected to COM-.	-
Power	VCC	20	VCC is +12V power provided by the drive. It is used for providing simple analog command (speed or torque). Maximum available current is 100mA.	-
	GND	12, 13, 19, 44	The polarity of VCC is with respect to GND.	
Other	NC	14, 29, 38, 39, 40, 46	⚠ ***The terminals marked NC should be left unconnected (No connection). Do not connect any external wiring to the NC terminals, or the drive could be damaged. The NC terminals are used internally by the servo drive.***	

CN1 Terminal Signals Explanation – Input Connections (continued)

The CN1 "Digital Input Signal" configurations can be changed by the user. The active state of the inputs can be either active high (N.O.) or active low (N.C.), depending upon how they are configured in parameters P2-10 through P2-17.

DI Signal Configuration						
Signal	**Pin No.**	**Parameter**		**Signal**	**Pin No.**	**Parameter**
DI1	9	P2-10		DI5	33	P2-14
DI2	10	P2-11		DI6	32	P2-15
DI3	34	P2-12		DI7	31	P2-16
DI4	8	P2-13		DI8	30	P2-17

CN1 Digital Input Signal Functions		
DI Code	**Function** Note 1	**Wiring Diagram**
01	Servo Enable	CN1-1 CN1-2
02	Alarm Reset	
03	Gain Boost Switch	
04	Clear Command	
05	Low Speed Clamp	
06	Command Input Polarity	
07	Position Command Pause (internal indexer only)	
08	Command Trigger	
09	Torque Limit Enable	
10	Speed Limit Enable	
11	Position Command Select 0 (PCS0) Note 2	
12	Position Command Select 1 (PCS1) Note 2	
13	Position Command Select 2 (PCS2) Note 2	
14	Velocity Command Select 0 (VCS0) Note 2	
15	Velocity Command Select 1 (VCS1) Note 2	
16	Torque Command Select 0 (TCS0) Note 2	
17	Torque Command Select 1 (TCS1) Note 2	
18	Position/Velocity Mode Select	
19	Velocity/Torque Mode Select	
20	Position/Torque Mode Select	
21	Fault Stop(N.C.)	
22	Reverse Inhibit (Overtravel) (N.C.)	
23	Forward Inhibit(Overtravel) (N.C.)	
24	Home Sensor	

Table continued on next page

CN1 Terminal Signals Explanation – Input Connections (continued)

CN1 Digital Input Signal Functions (continued)		
DI Code	**Function** Note 1	**Wiring Diagram**
25	Torque Limit - Reverse Direction	CN1-1 CN1-2
26	Torque Limit - Forward Direction	
27	Start Home Move Trigger	
28	Index Mode Select 0 (IMS0)	
29	Index Mode Select 1 (IMS1)	
30	Index Mode Select 2 (IMS2)	
31	Index Mode Select 3 (IMS3)	
32	Index Mode Select 4 (IMS4)	
33	Index Mode Control 0 (IMC0)	
34	Index Mode Control 1 (IMC1)	
35	Index Mode - Manual Continuous Operation	
36	Index Mode - Manual Single Step Operation	
37	Jog Forward	
38	Jog Reverse	
39	Step Reverse (Pr mode only)	
40	Step Forward (Pr mode only)	
41	Return to Index 1 (Auto Index Mode only)	
42	Auto Index Position Mode	
43	Electronic Gear Numerator Select 0 (EGNS0)	
44	Electronic Gear Numerator Select 1 (EGNS1)	
45	Inhibit Pulse Command - Terminal	

Note 1: Refer to Parameters Chapter 4 for DI function descriptions.
Note 2: Codes for these inputs are defined in parameters Chapter 4, with P1-02, P1-09, P1-12, P1-15.

CN1 Terminal Signals Functions – Output Connections

The CN1 digital output signal configurations can be changed by the user. For most modes of operation, users can set parameters P2-44 and P2-18 through P2-22 to determine the functions and active states [active high (N.O.) or active low (N.C.)] of the individual outputs. For Pr Index and Auto Modes, users can set P2-44 so that the outputs collectively display binary codes that indicate the current status during indexing operations. Refer to the "Parameters for Index Mode Pr Control" and "Parameters for Absolute and Incremental Auto Pr Control" subsections of Chapter 5 for the applicable status indicating binary codes.

DO Signal Configuration (for P2-44 = 0)						
Signal	**Pin No.**	**Parameter**		**Signal**	**Pin No.**	**Parameter**
DO1+	7	P2-18		DO4+	1	P2-21
DO1-	6			DO4-	26	
DO2+	5	P2-19		DO5+	28	P2-22
DO2-	4			DO5-	27	
DO3+	3	P2-20		***Refer to Chapter 5 for DO configuration for when P2-44 = 1***		
DO3-	2					

CN1 Digital Output Signal Functions (for P2-44 = 0)			
DO Code	**Function**	**Control Mode**	**Wiring Diagram**
01	Servo Ready	All	CN1-7 CN1-8 CN1-9 CN1-10 CN1-11 CN1-12
02	Servo Enabled	All	
03	At Zero Speed	All	
04	At Speed Reached (Velocity Modes)	All Except: Pt, Pr	
05	At Position (Position Modes)	Pt, Pr, Pt-S, Pt-T, Pr-S, Pr-T	
06	At Torque Limit	All T modes	
07	Active Fault	All	
08	Electromagnetic Brake Control	All	
09	Homing Completed (Position Modes)	All Pt/Pr Modes	
10	At Overload Output Warning Threshold	All	

Note:
Refer to Parameters Chapter 4 for DO function descriptions.
Refer to Control Modes Chapter 5 for DO binary codes for Pr modes when P2-44 = 1.

CN2 – Encoder Terminal

A 2500 line count incremental encoder is integrated within the *Sure*Servo motor.

When power is first applied to the servo drive, control algorithms detect the motor's rotor position through sensors imbedded in the motor. Feedback to the drive of the UVW signals for commutation is via the ABZ encoder signal wires. Following rotor position sensing, the drive automatically switches to encoding for commutation control.

The 2500 line count encoder is automatically multiplied by four inside the drive to produce 10000 ppr for increased control accuracy. The output can be scaled using parameter P1-46.

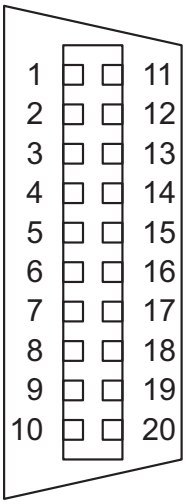

CN2 Drive Connector

CN2 Terminal Connection

CN2 connects to Automation Direct part #SVC-Exx-0x0 encoder feedback cable (as listed in the "Cables and Terminal Connectors" section of this chapter), or to 3M part #10120-3000VE connector and #10330-52A0-008 shell.

CN2 Terminal Signal Identification

CN2 Terminal Signal Identification			
PIN No.	**Signal Name**	**Terminal Identification**	**Description**
2	/Z phase input	/Z	Encoder /Z phase output
4	/A phase input	/A	Encoder /A phase output
5	A phase input	A	Encoder A phase output
7	B phase input	B	Encoder B phase output
9	/B phase input	/B	Encoder /B phase output
10	Z phase input	Z	Encoder Z phase output
14, 16	Encoder power	+5V	Encoder 5V power
13, 15	Encoder power	GND	Grounding

CN3 – Serial Communication Terminal

The servo drive can be connected to a computer or a MODBUS-capable controller (PLC) by a serial communication connector. The communication connector/port of SureServo drive can provide three common serial communication interfaces: RS-232, RS-422, and RS-485 connections. RS-232 is frequently used, but is somewhat limited since the maximum cable length for RS-232 connections is 15 meters (50 feet), and it can only connect two devices. Using RS-485 allows longer transmission distances and supports multiple drives connected on a multidrop network.

Set parameter P3-05 to select which communication configuration is being used. Refer to Chapter 4 for information regarding parameter settings.

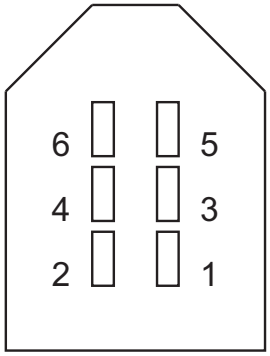

CN3 Drive Connector

CN3 Terminal Connection

CN3 connects to Automation Direct part #SVC-MDCOM-CBL or #SVC-PCCFG-CBL communication cables (as described in the "Cables and Terminal Connectors" section of this chapter), or to an IEEE 1394 plug.

CN3 Terminal Signal Identification

CN3 Terminal Signal Identification			
PIN No.	**Signal Name**	**Terminal Identification**	**Description**
1	Grounding	GND	Ground
2	RS-232 data transmission	RS-232 TX	For data transmission of the servo drive. Connected to the RS-232 interface of PC.
3	RS-422/485 data receiving	RS-422/485 RXD+	For data receiving of the servo drive. (differential line driver + end)
4	RS-232 data receiving	RS-232 RX	For data receiving of the servo drive. Connected to the RS-232 interface of PC.
	RS-422/485 data receiving	RS-422/485 RXD-	For data receiving of the servo drive. (differential line driver - end)
5	RS-422/485 data transmission	RS-422/485 TXD+	For data transmission of the servo drive. (differential line driver + end)
6	RS-422/485 data transmission	RS-422/485 TXD-	For data transmission of the servo drive. (differential line driver - end)
Note: For RS-485 connection, jumper pin 5 to pin 3, and jumper pin 4 to pin 6; otherwise same as RS-422 connection.			

Servo Motor Terminal Connections

Power Connections

Motor Part Number	U, V, W / Electromagnetic Brake Connector	Terminal ID
SVL-201(B) SVL-202(B) SVL-204(B) SVL-207(B)	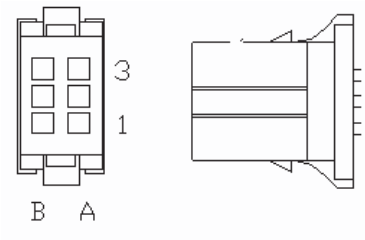	A

Motor Part Number	U, V, W / Electromagnetic Brake Connector	Terminal ID
SVL-210(B) SVM-210(B)	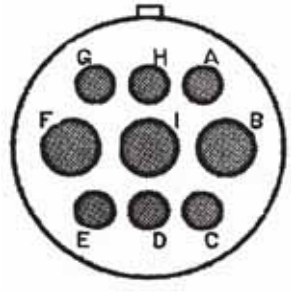	B
SVM-220(B) SVM-230(B)	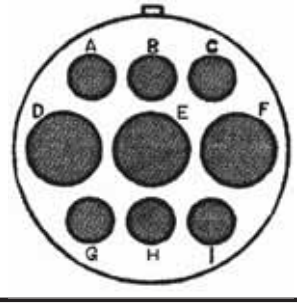	C

Terminal ID	W (Black)	V (White)	U (Red)	Case Ground (Green)	Brake 1 (Orange)	Brake 2 (Yellow)	Mating Connector
A	A3	A2	A1	B1	B2	B3	AMP - 178289-3
B	B	I	F	E	G	H	Amphenol- MS3106-20-18S
C	F	E	D	G	A	B	Amphenol- MS3106-24-11S

Encoder Connections

Encoder Connectors		
Motor Part Number	**Encoder Connector**	**Terminal ID**
SVL-201(B) **SVL-202(B)** **SVL-204(B)** **SVL-207(B)**	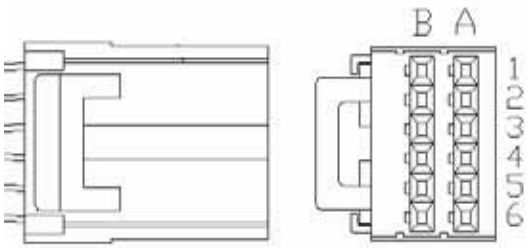	A
SVL-210(B) **SVM-210(B)** **SVM-220(B)** **SVM-230(B)**	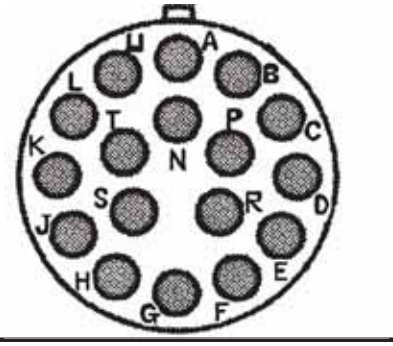	B

Terminal ID	A (BL)	/A (BL/BK)	B (GN)	/B (GN/BK)	Z (YL)	/Z (YL/BK)	5V (RD)	GND (BK)	BRAID SHIELD	Mating connector
A	A1	B1	A2	B2	A3	B3	A5	B5	B6	AMP - 1-1318118-6
B	A	B	C	D	F	G	S	R	-	Amphenol - MS3106-20-29S

Wiring Diagrams

Connecting to Peripheral Devices

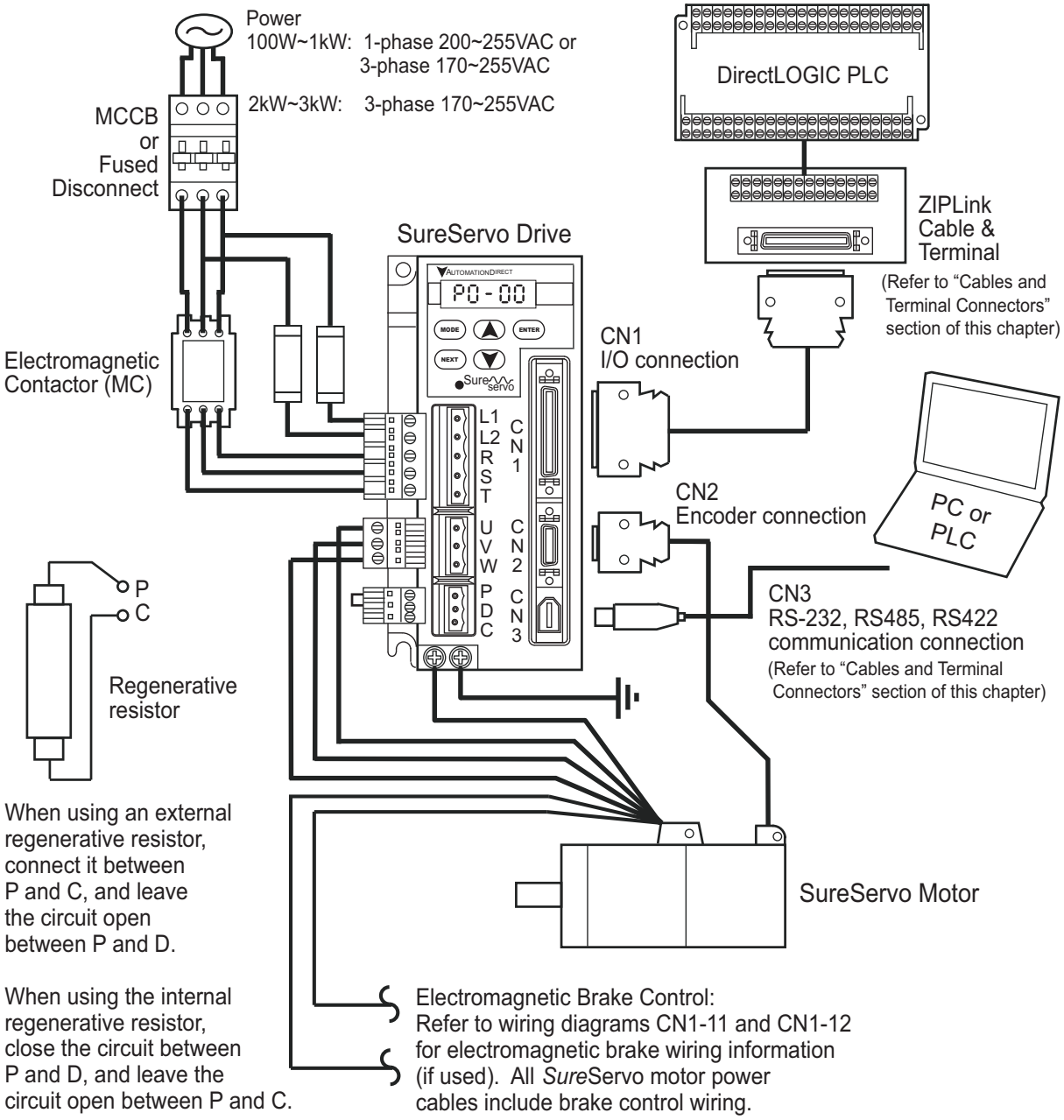

Power Wiring Connections

Three Phase Power Supply – All *Sure*Servo Drive Models (except as noted)

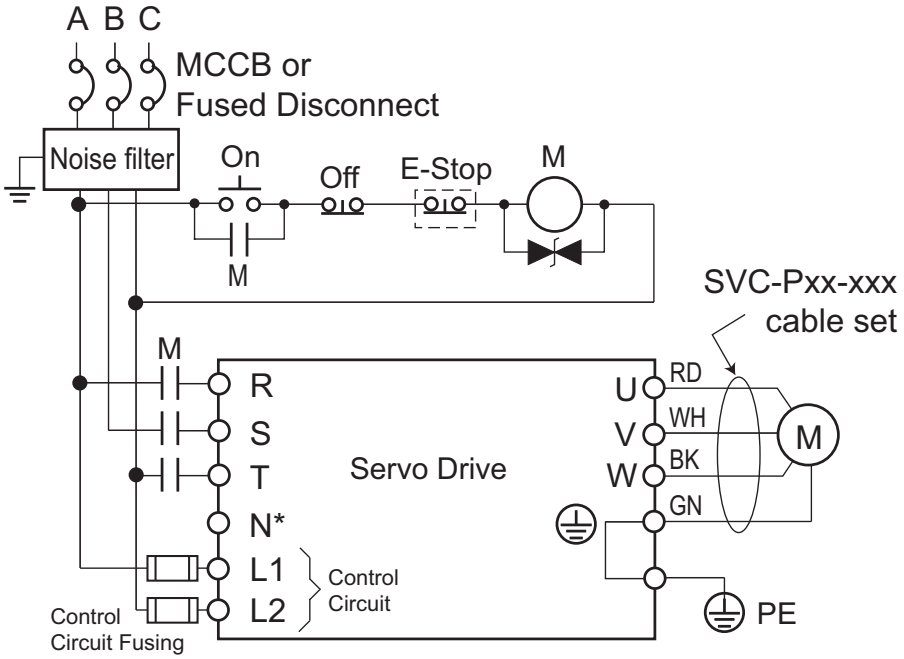

* - N terminal SVA-2300 only;
negative side of DC bus;
no wiring connection required;

Single Phase Power Supply – *Sure*Servo Drive Models SVA-2040, SVA-2100

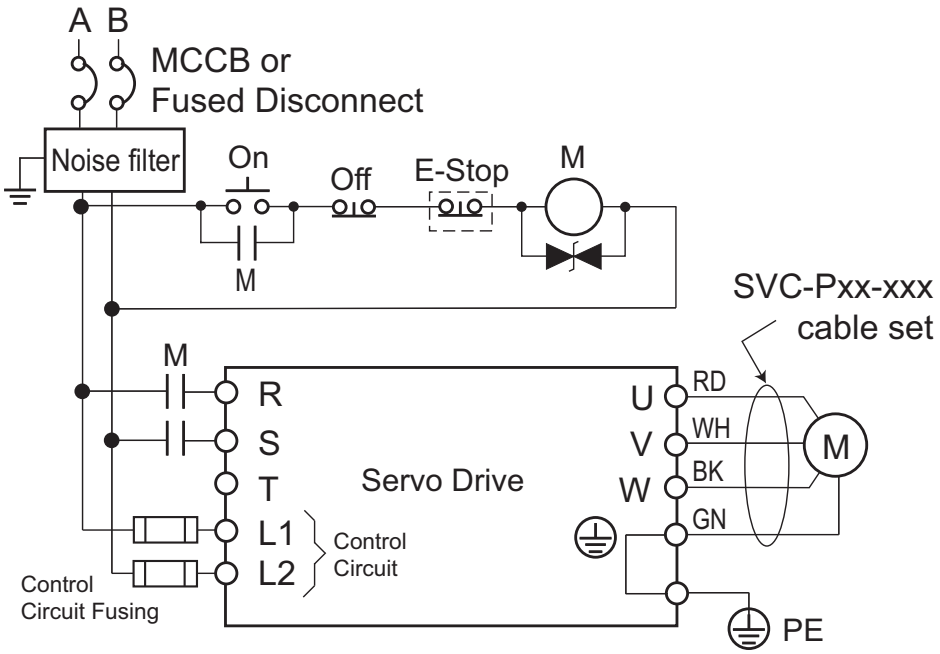

Wiring for Position (Pr & Pt) Control Modes

This wiring diagram shows basic wiring only, and additional wiring configurations are possible for some I/O.
Refer to subsequent subsections of this chapter for more detailed wiring information.

Position (Pr & Pt) Control Modes

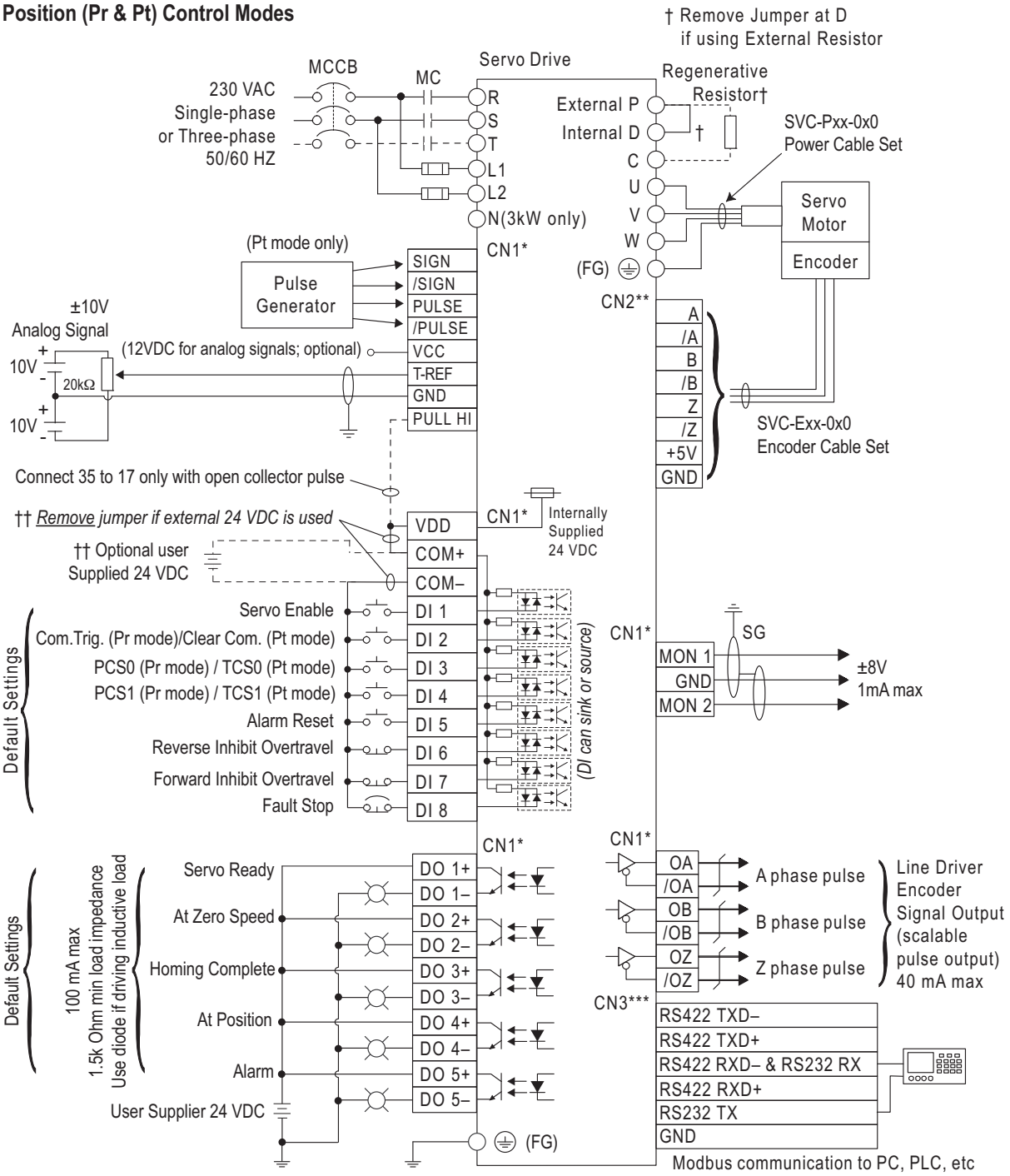

* Use connection kit part #s ZL-RTB50 & ZL-SVC-CBL-50(-x) for CN1 terminal connections.
** Use cable part # SVC-Exx-0x0 for CN2 terminal connections.
*** Use cable part # SVC-MDCOM-CBL for CN3 terminal Modbus network connections.

Wiring for Velocity and Torque Control Modes

This wiring diagram shows basic wiring only, and additional wiring configurations are possible for some I/O.
Refer to subsequent subsections of this chapter for more detailed wiring information.

Velocity and Torque Control Modes

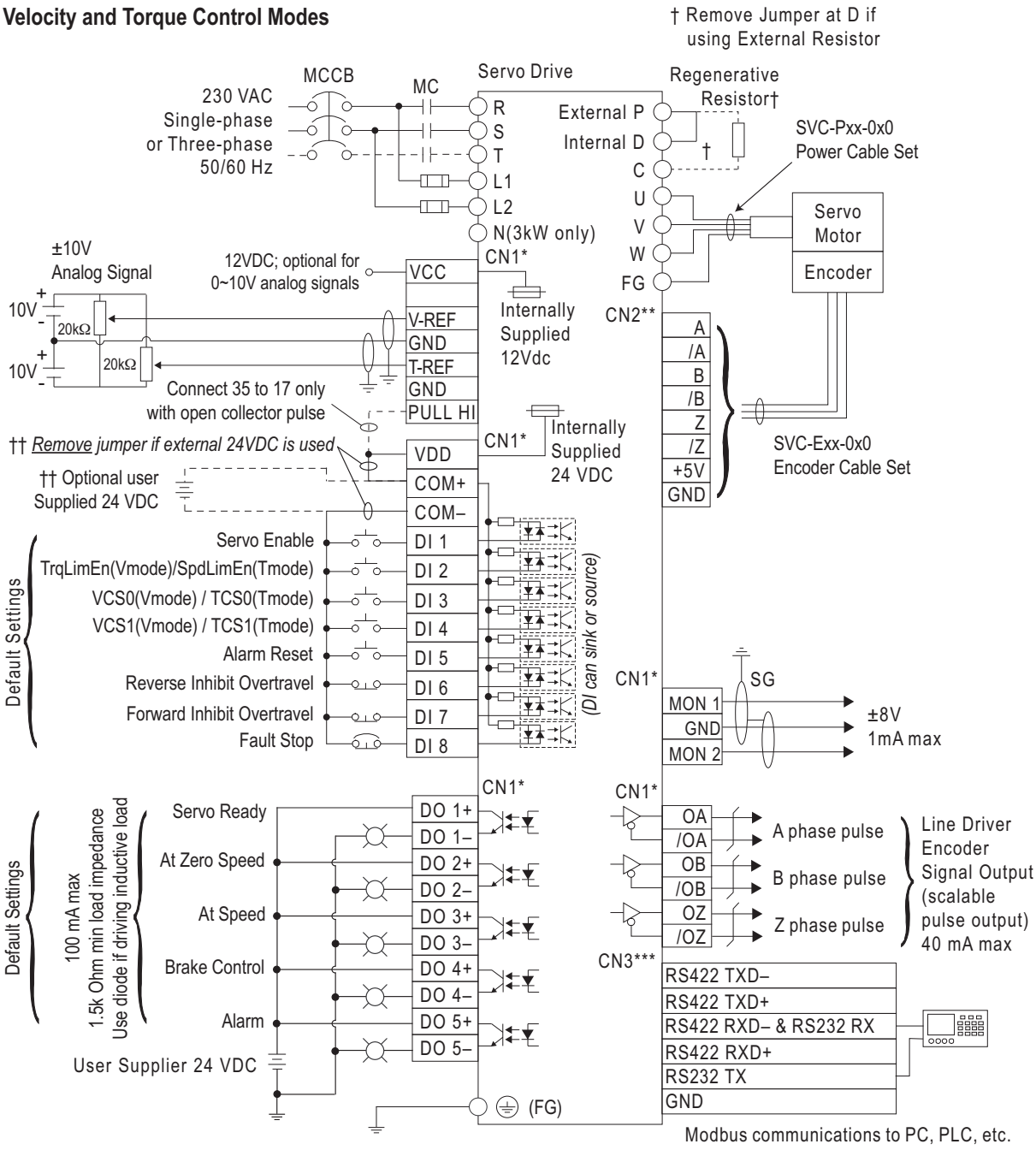

* Use connection kit part #s ZL-RTB50 & ZL-SVC-CBL-50(-x) for CN1 terminal connections.
** Use cable part # SVC-Exx-0x0 for CN2 terminal connections.
*** Use cable part # SVC-MDCOM-CBL for CN3 terminal Modbus network connections.

CN1 Input/Output Wiring Diagrams

Refer to the “Cables and Terminal Connectors” section of this chapter for a cable and terminal module to connect to this terminal.

Refer to Appendix C for Koyo Encoder and PLC wiring examples.

CN1-DI_1:
Wiring of **Digital Input** using **internal power supply**
(sinking output field device connected to sourcing input)

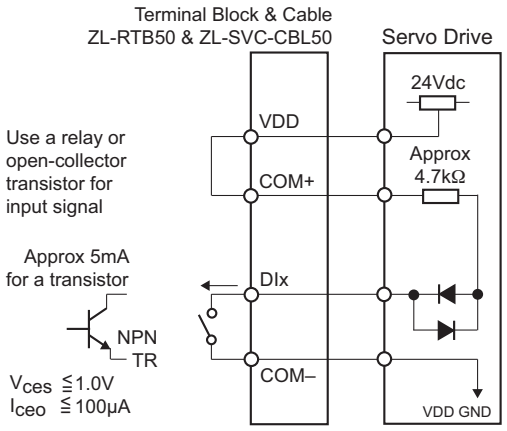

CN1-DI_2:
Wiring of **Digital Input** using **external power supply**
(sinking output field device connected to sourcing input)

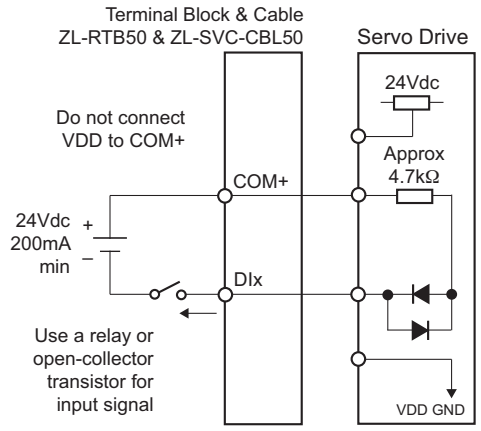

CN1-DI_3:
Wiring of **Digital Input** using **internal power supply**
(sourcing output field device connected to sinking input)

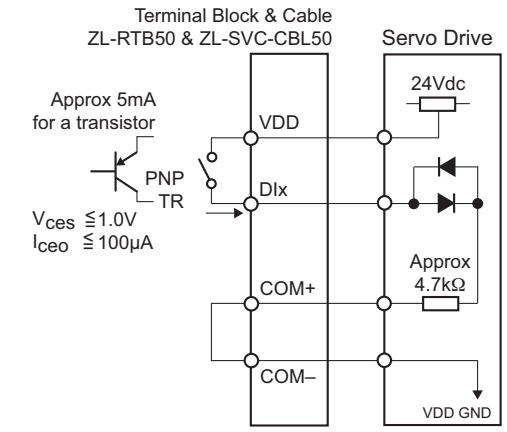

CN1-DI_4:
Wiring of **Digital Input** using **external power supply**
(sourcing output field device connected to sinking input)

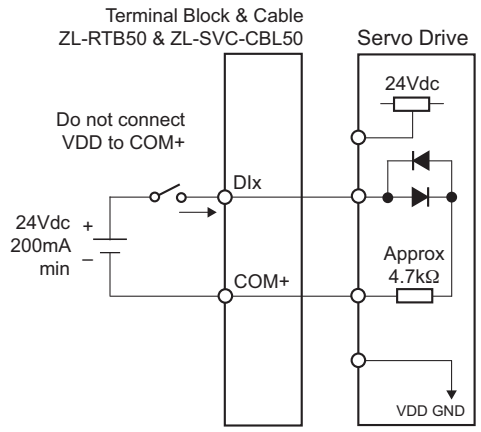

CN1 Input/Output Wiring Diagrams (continued)

CN1-AI: Velocity / Torque **analog signal input**

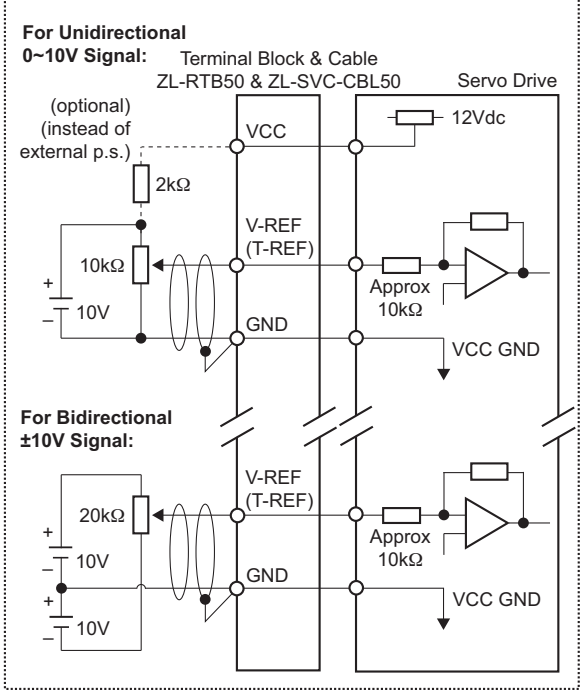

CN1-PI_1: **Pulse Input**
(NPN / Sinking / Open-collector encoder)

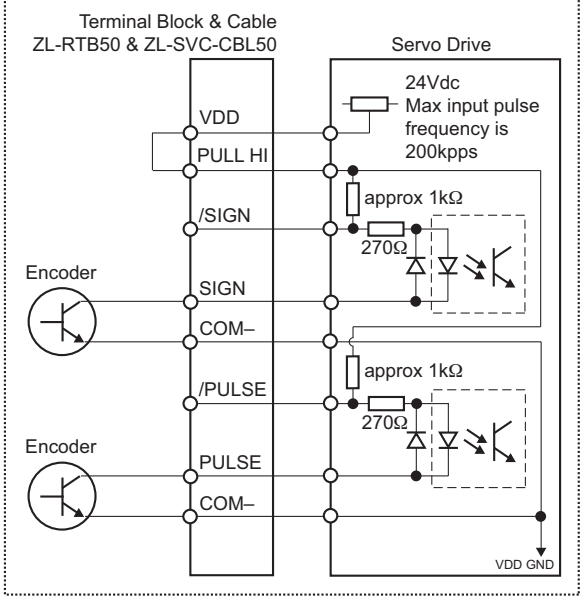

CN1-PI_2: **Pulse Input** (line driver encoder)

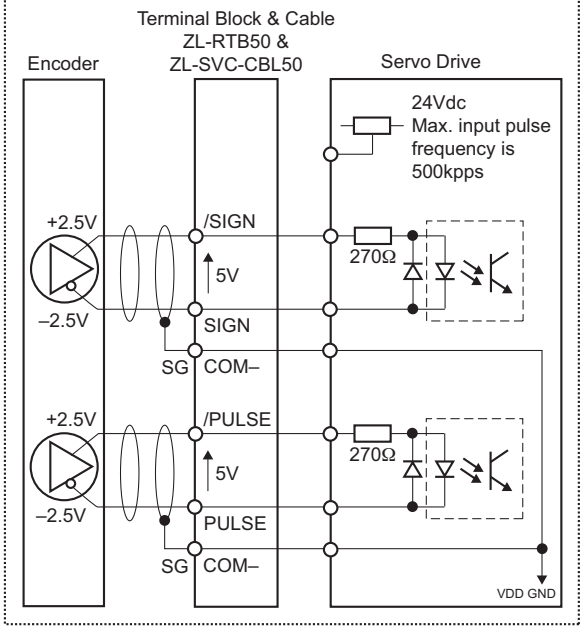

CN1-PI_3: **Pulse Input** (Push-pull/Totem-Pole encoder)

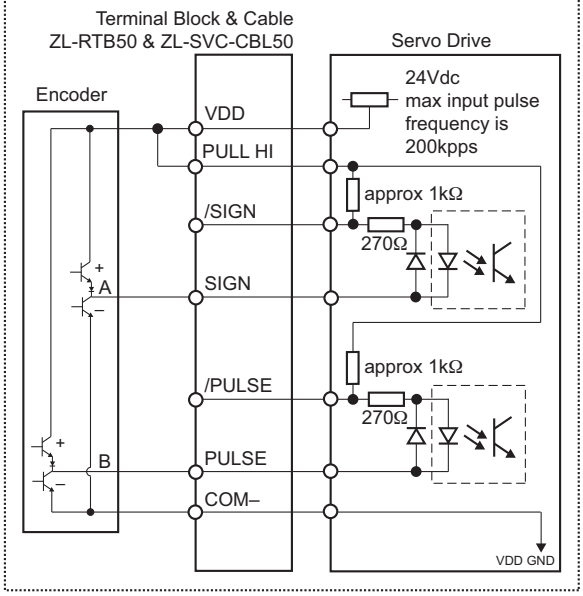

CN1 Input/Output Wiring Diagrams (continued)

CN1-PI_4: **Pulse Input** (PNP/Sourcing encoder)

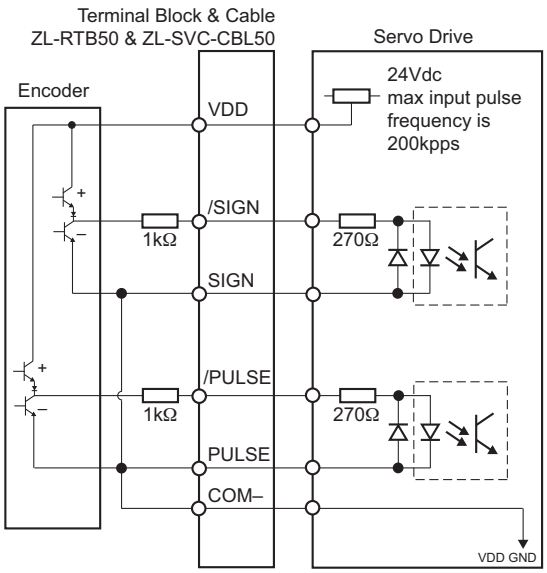

CN1-PI_5: **Pulse Input** (+5V output encoder)

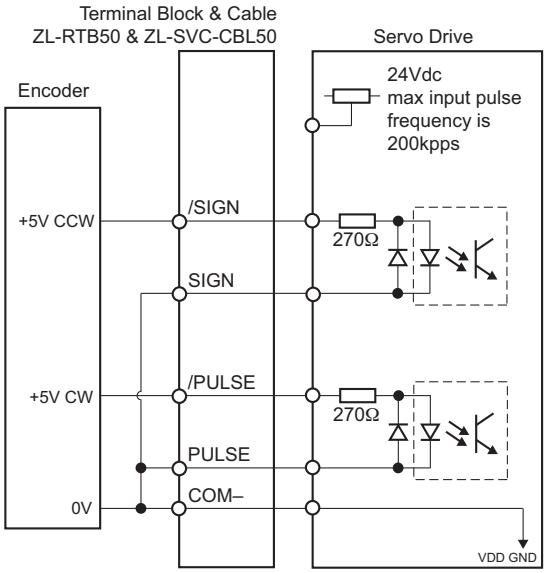

CN1 Input/Output Wiring Diagrams (continued)

CN1-DO_1: Wiring of **DO Signal**, for use of **internal power supply**, resistive load

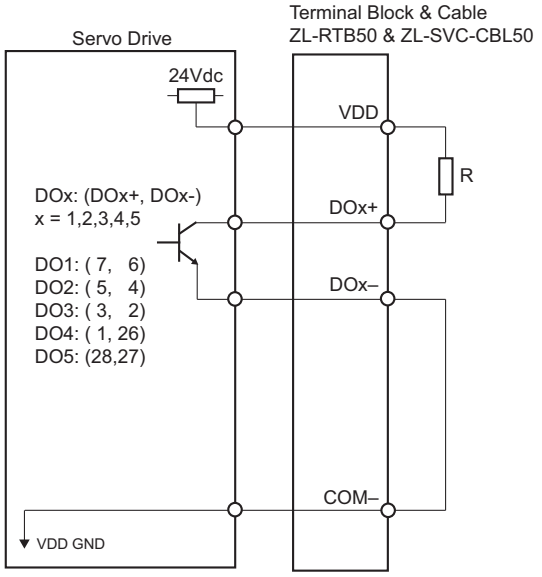

CN1-DO_2: Wiring of **DO Signal**, for use of **internal power supply**, inductive load

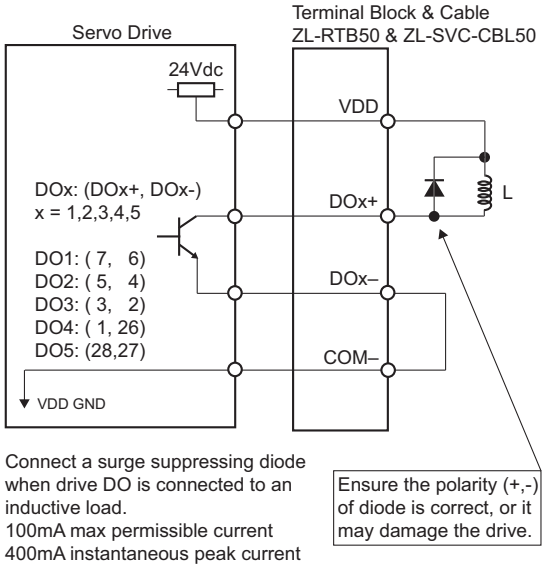

Connect a surge suppressing diode when drive DO is connected to an inductive load.
100mA max permissible current
400mA instantaneous peak current

CN1-DO_3: Wiring of **DO Signal**, for use of **external power supply**, resistive load

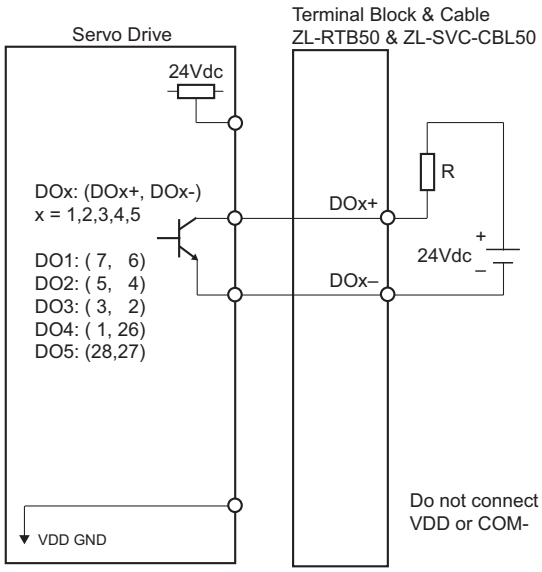

CN1-DO_4: Wiring of **DO Signal**, for use of **external power supply**, inductive load

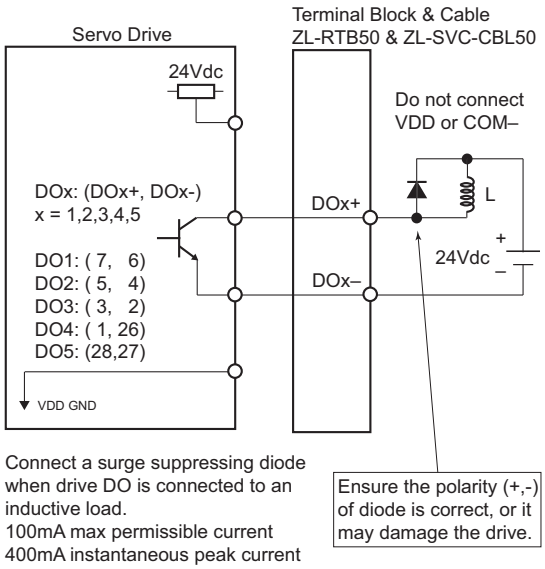

Connect a surge suppressing diode when drive DO is connected to an inductive load.
100mA max permissible current
400mA instantaneous peak current

CN1 Input/Output Wiring Diagrams (continued)

CN1-DO_5: Wiring of **DO signal**, for the use of **internal power supply**, electromagnetic **brake**

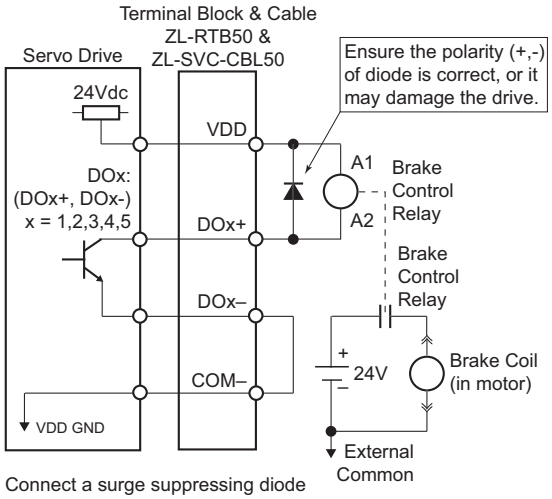

Connect a surge suppressing diode when drive DO is connected to an inductive load.
100mA max permissible current
400mA instantaneous peak current

CN1-DO_6: Wiring of **DO signal**, for the use of **external power supply**, electromagnetic **brake**

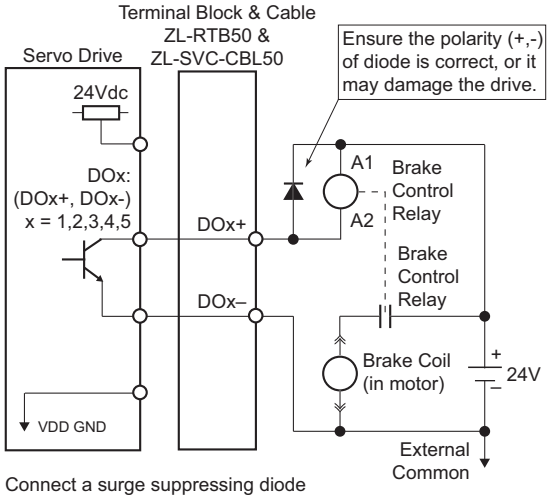

Connect a surge suppressing diode when drive DO is connected to an inductive load.
100mA max permissible current
400mA instantaneous peak current

Do not connect VDD or COM–

Electromagnetic Brake Notes:
1) Use a surge suppressing diode on the coil of the Brake Control Relay.
*2) Do not use VDD for **Brake Coil** power; use it only for **Relay Coil** power.*
3) All SureServo motor power cables are equipped with brake wires.
4) The Electromagnetic Brake Control DO setting should be 108 (P2-18~P2-22).
5) P1-42 sets the brake On Delay, and P1-43 sets the brake Off Delay.

Recommended Electromagnetic Brake Control Components	
Component	**AutomationDirect Part Number**
Brake Control Relay	782-2C-24D
Brake Control Relay Socket	782-2C-SKT
Surge Suppressing Diode	AD-BSMD-250

CN1 Input/Output Wiring Diagrams (continued)

CN1-AO: **Analog Monitor output** (MON1, MON2)

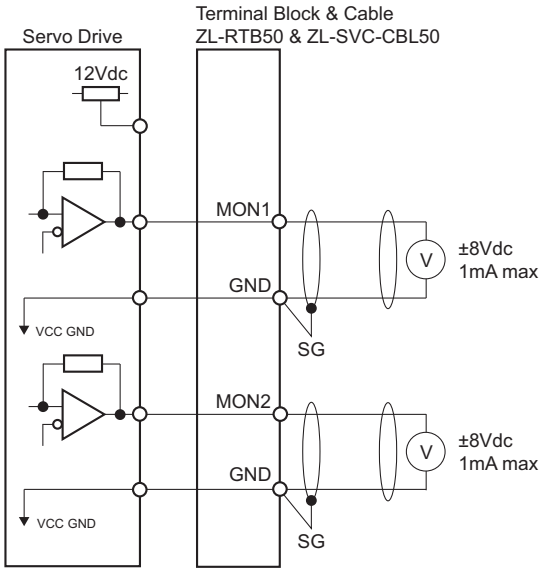

CN1-EO_1: Line driver **Encoder output** (Line driver signal)

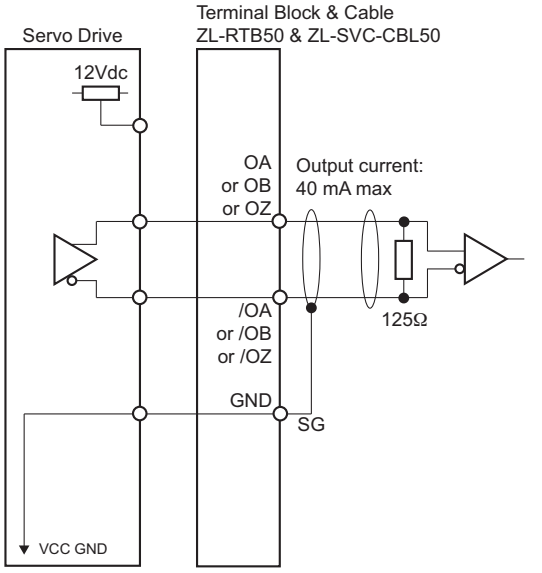

CN1-EO_2: Line driver **Encoder output** (Photocoupler signal)

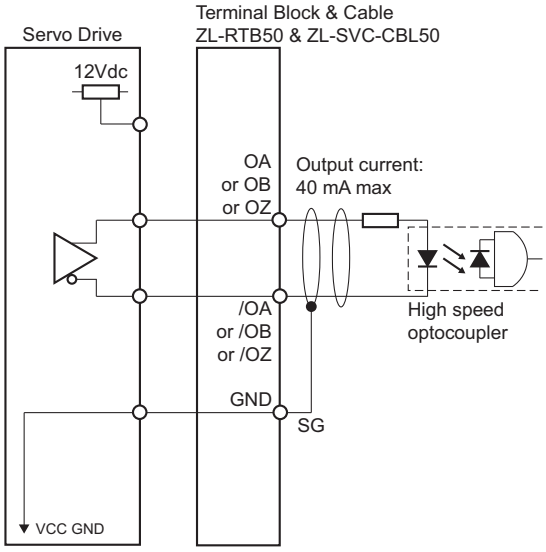

CN2 Encoder Wiring Diagram

Refer to the “Cables and Terminal Connectors” section of this chapter for cables to connect directly from *Sure*Servo motor encoders to this terminal.

CN3 Serial Communication Wiring Diagram

Refer to the “Cables and Terminal Connectors” section of this chapter for cables to connect directly to this terminal.

Cables and Terminal Connectors

Drive, Motor, and Cable Combinations

*Sure*Servo Drive, Motor, and Cable Combinations												
Servo Drive	***Servo Motor without Brake[1]***	***Servo Motor with Brake[1]***	***Power Cable[2] - 10ft***	***Power Cable[2] - 20ft***	***Power Cable[2] - 30ft***	***Power Cable[2] - 60ft***	***CN2 - Encoder Feedback Cable - 10ft***	***CN2 - Encoder Feedback Cable - 20ft***	***CN2 - Encoder Feedback Cable - 30ft***	***CN2 - Encoder Feedback Cable - 60ft***	***CN1 - I/O Cable[3]***	***CN3 - Serial Cable - 3ft***
SVA-2040	SVL-201	SVL-201B	SVC-PFL-010	SVC-PFL-020	SVC-PFL-030	SVC-PFL-060	SVC-EFL-010	SVC-EFL-020	SVC-EFL-030	SVC-EFL-060	ZL-SVC-CBL50 or ZL-SVC-CBL50-1 or ZL-SVC-CBL50-2 (0.5, 1, or 2 m)	SVC-MDCOM-CBL
	SVL-202	SVL-202B										
	SVL-204	SVL-204B										
SVA-2100	SVL-207	SVL-207B										
	SVL-210	SVL-210B	SVC-PHM-010	SVC-PHM-020	SVC-PHM-030	SVC-PHM-060	SVC-EHH-010	SVC-EHH-020	SVC-EHH-030	SVC-EHH-060		
	SVM-210	SVM-210B										
SVA-2300	SVM-220	SVM-220B	SVC-PHH-010	SVC-PHH-020	SVC-PHH-030	SVC-PHH-060						
	SVM-230	SVM-230B										

NOTE 1: Each servo motor requires a power cable and an encoder feedback cable.
NOTE 2: All SureServo power cables include brake wires.
NOTE 3: CN1 I/O cable requires a ZIPLink DIN rail mountable breakout terminal block.

Drive Terminal Connection Module & Cables

ZIPLink Terminal Connector Module & Cable for CN1

- **ZL-RTB50 connector module**

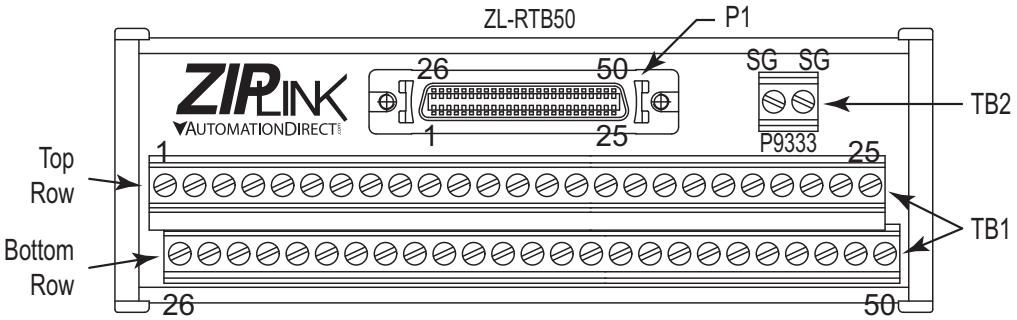

ZL-RTB50 Pin-out – TB1																									
Top Row																									
P1 Pin #	1	2	3	4	5	6	7	8	9	10	11	12	13	14	15	16	17	18	19	20	21	22	23	24	25
TB1 Terminal #	1	2	3	4	5	6	7	8	9	10	11	12	13	–	15	16	17	18	19	20	21	22	23	24	25
Description	DO4+	DO3–	DO3+	DO2–	DO2+	DO1–	DO1+	DI4	DI1	DI2	COM+	GND	GND	n/c *	MON2	MON1	VDD	T_REF	GND	VCC	OA	/OA	/OB	/OZ	OB
Bottom Row																									
P1 Pin #	26	27	28	29	30	31	32	33	34	35	36	37	38	39	40	41	42	43	44	45	46	47	48	49	50
TB1 Terminal #	26	27	28	–	30	31	32	33	34	35	36	37	–	–	–	41	42	43	44	45	–	47	48	49	50
Description	DO4–	DO5–	DO5+	n/c *	DI8	DI7	DI6	DI5	DI3	Pull Hi	/SIGN	SIGN	n/c *	n/c *	n/c *	PULSE	V_REF	/PULSE	GND	COM–	n/c *	COM–	OCZ	COM–	OZ
**** "n/c" indicates "no connection". Terminals marked "n/c" should be left unconnected; otherwise the SureServo drive could be damaged.***																									
ZL-RTB50 Pin-out – TB2																									
TB2 is internally connected to the shield drain wire and should be field connected to earth ground.																									

- **ZL-SVC-CBL50-x cable**

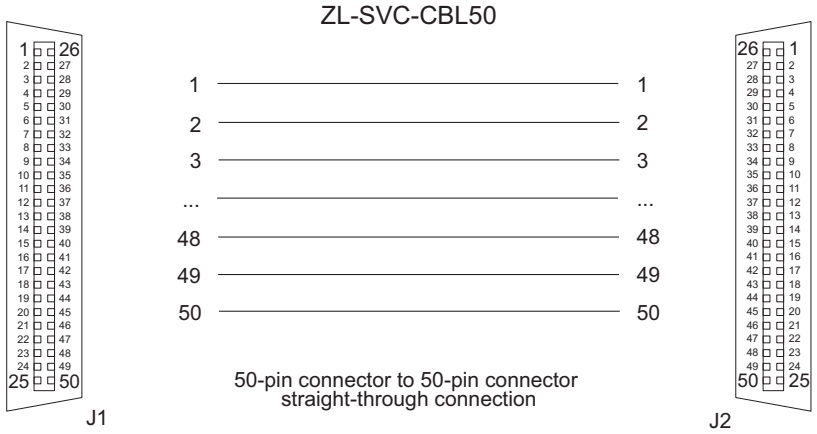

Serial Cables for Connection to CN3

SVC-MDCOM-CBL

RS232/422/485 communication cable for use with multidrop networks; 3ft length; IEEE 1394 plug to unterminated wires; compatible with all *Sure*Servo systems.

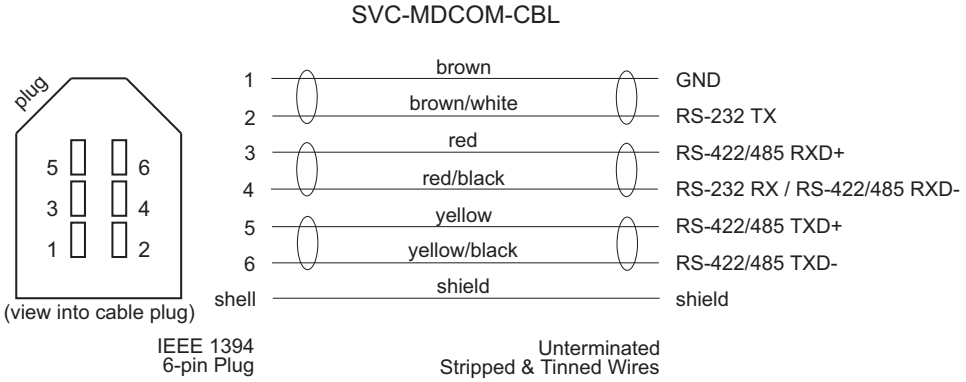

SVC-PCCFG-CBL

RS-232 serial cable primarily for use with *Sure*Servo configuration software; connects the drive CN3 terminal to a PC or PLC with a DB-9 serial port; 6ft length. (A USB converter, part # USB-RS232, is also available for PCs or PLCs with USB ports.)

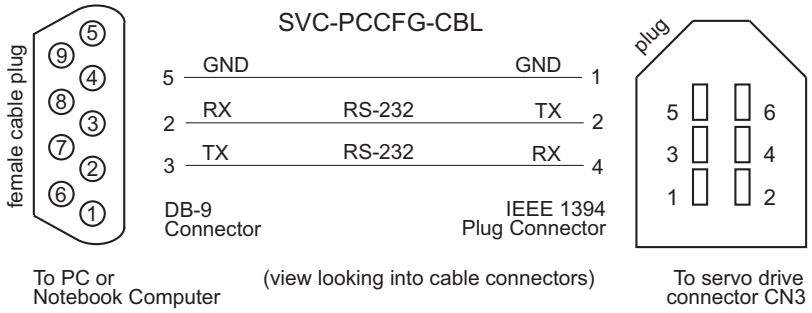

Servo Drive Circuit Protection

Servo Drive Circuit Protection				
Drive	**Input Type**	**Input Voltage / Phase**	**Recommended Fuse or CB Rating**	**Recommended Edison Type CC Fuse**
SVA-2040	Power Circuit	230V / 1ϕ	4A time delay (D curve)	HCTR4
		230V / 3ϕ		
SVA-2100	Power Circuit	230V / 1ϕ	10A time delay (D curve)	HCTR10
		230V / 3ϕ	7.5A time delay (D curve)	HCTR7-5
SVA-2300	Power Circuit	230V / 3ϕ	15A time delay (D curve)	HCTR15
All	Control Circuit	230V / 1ϕ	2.5A time delay (D curve)	HCTR2-5

Keypad and Display Operation

CHAPTER 3

In This Chapter ...

Digital Keypad 3-2

Display Flowchart 3-3

Display Messages 3-4

- Parameter Setting Value Change Messages 3-4
- Abort Parameter Setting Value Change Message 3-4
- Fault Message Display 3-4
- Polarity Display of Parameter Setting Values 3-5
- Monitor Mode Function Display 3-5
- Polarity Display of Monitor Values 3-6

Servo Drive General Operation 3-7

- Display Fault History 3-7
- JOG Function 3-7
- Teach Position Function 3-8
- DO Force Output Function 3-9
- Display Digital Input Status 3-10
- Display Digital Output Status 3-10

Digital Keypad

The digital keypad includes the function keys and LED display. The diagram below shows the features of the digital keypad and an overview of their functions.

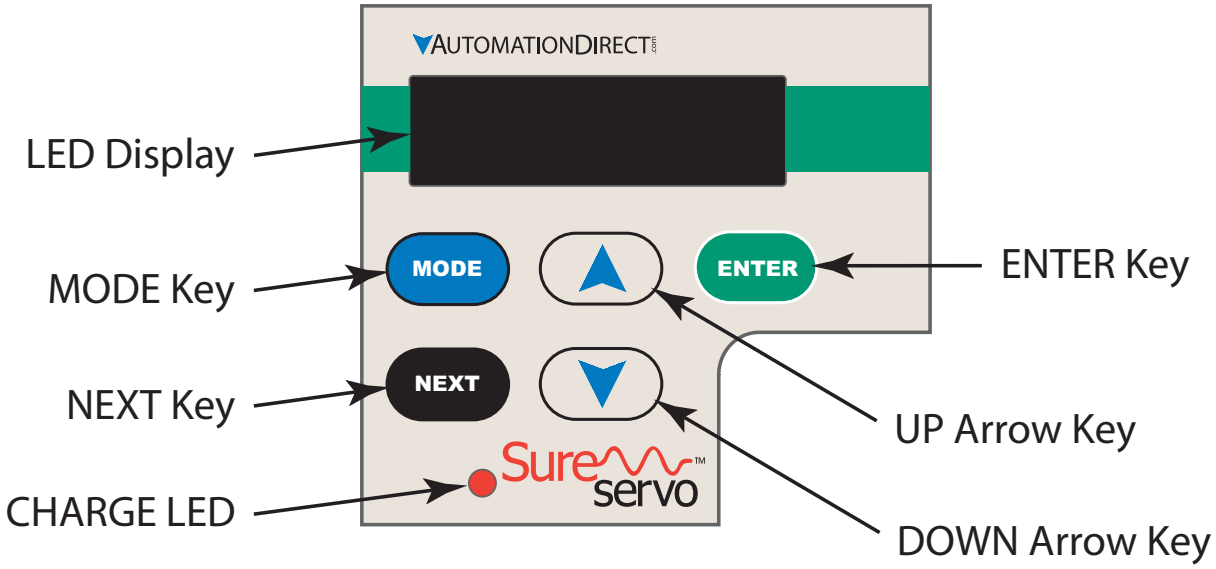

Feature	Function
LED Display	The LED Display (5-digit, 7-segment display panel) shows the monitor codes, parameter settings and operation values of the AC servo drive.
CHARGE LED	The Charge LED illuminates to indicate that power is applied to the servo drive input power circuit, and/or that the DC-link capacitor is charged.
MODE Key	The MODE key switches between monitor mode and parameter mode. It also returns to a parameter (parameter mode) from it's parameter value (parameter setting mode) without changing the parameter value.
NEXT Key	The NEXT key scrolls through the parameter groups. After a parameter has been selected and it's value displayed (parameter setting mode), users can change the parameter value individual digits by using the NEXT key to move the cursor to left, and then using the arrow keys to change the blinking digit. The NEXT key can also be used to scroll left and indicate negative values for parameter settings.
UP Key	The UP key scrolls through the parameters and parameter groups, and can change the parameter values.
DOWN Key	The DOWN key scrolls through the parameters and parameter groups, and can change the parameter values.
ENTER Key	The ENTER key can display and save the parameter value settings. (Parameter value setting changes are not effective until the ENTER key is pressed.)
For further explanation of keypad operation, refer to the keypad "Display Flowchart" section on the next page.	

Display Flowchart

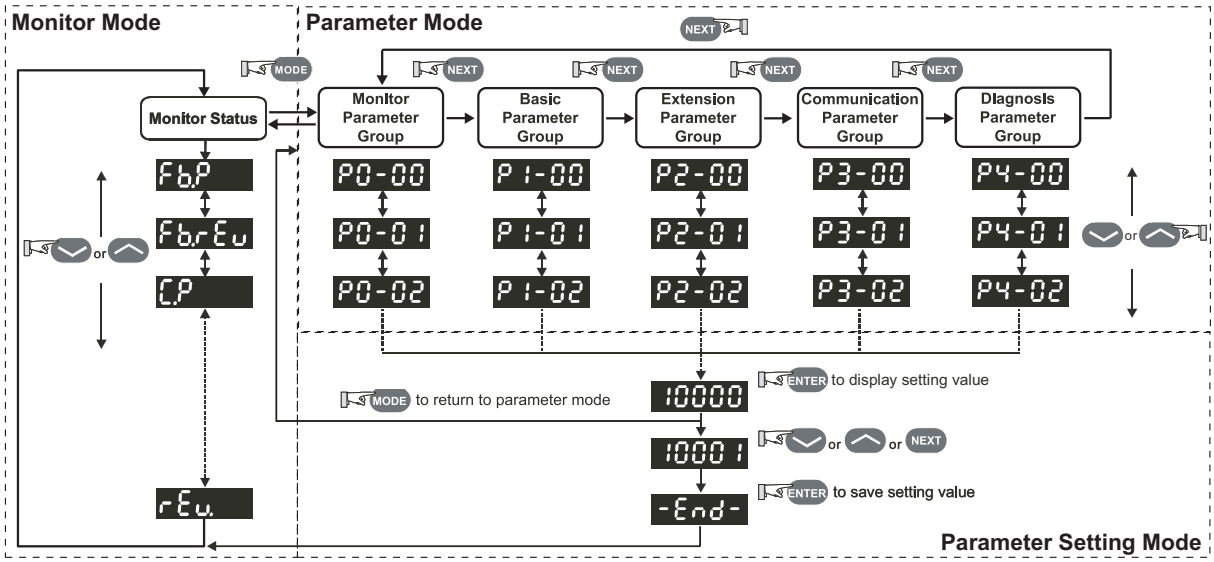

(1) When power is applied to the AC servo drive, the LED display will show the display monitor status code for approximately one second. (This code indicates which function will be monitored on the display when the drive is running.) Then the display will enter the monitor mode.

(2) From monitor mode, press the UP or DOWN key to change the monitor status code. At this time, the monitor code will display for approximately one second. (Refer to the “Monitor Mode Function Display” section for more information.)

(3) From monitor mode, press the MODE key to enter the parameter mode, then press the NEXT key to switch the parameter group, and press the UP or DOWN key to change the parameter.

(4) From parameter mode, press the ENTER key to enter into the parameter setting mode, and to display the setting value of the parameter that was previously shown. Then, use the UP/DOWN keys to change the parameter setting value, or press the MODE key to exit and return to the parameter mode.

(5) To change parameter setting values, press the UP/DOWN keys while in parameter setting mode. Alternately, press the NEXT key to move the cursor to left in order to change individual parameter setting value digits (blinking) with the UP/DOWN keys. To input **negative** values, press the NEXT key repeatedly (past the most significant digit) until the negative value symbol appears.

(6) After the parameter setting value change is completed, press ENTER key to save the new parameter setting value. (Or press MODE to return to parameter mode without saving the new parameter setting value.)

(7) When the parameter setting value is saved, the LED display will show the end code "-END-", and automatically return to monitor mode. (The following “Display Messages” section lists other messages that may be displayed after a value is entered.)

Display Messages

Parameter Setting Value Change Messages

One of the following messages will display for approximately one second after the ENTER key is pressed to save a new parameter setting value:

Parameter Setting Value Change Messages	
Display Message	**Description**
-End-	The setting value is saved correctly.
Err-r	This parameter is read only, and it's setting value cannot be changed.
Err-P	Invalid password or no password was input.
Err-C	This setting value is invalid.
SrvOn	The servo system is running and is unable to accept this setting value change.
No-EE	This parameter will not be stored in EEPROM.
Po-On	This setting value change is valid only after restarting the drive.

Abort Parameter Setting Value Change Message

The following message will display for approximately one second after the MODE key is pressed to avoid saving a new parameter setting value:

Abort Parameter Setting Value Change Message	
Display Message	**Description**
Abort	Return to monitor mode from parameter mode.

Fault Message Display

The following message will display when the AC drive has a fault:

Fault Message Display	
Display Message	**Description**
ALEnn	"ALE" indicates the alarm, and "nn" indicates the drive fault code. For a listing of drive fault codes, refer to parameter P0-01, or to the "Maintenance and Troubleshooting" chapter.
For drive firmware v2.10 and higher, active faults can be **reset** from the keypad. Press and hold the UP and DOWN Arrow Keys simultaneously for two seconds to clear the fault.	

Polarity Display of Parameter Setting Values

The following symbols indicate positive or negative parameter value polarities:

Polarity Display of Parameter Setting Value	
Display Message	**Description**
1 2345	Positive value display; no symbols are displayed to indicate sign.
-1 234	Negative value display (for parameters with ranges of less than 5 decimal places); Negative sign is displayed to indicate a negative value.
1 .2.3.4.5.	Negative value display (for parameters with ranges of 5 decimal places); Decimal points following each digit are used to indicate a negative value.
To enter a ***negative parameter value***, push the NEXT key repeatedly until the negative value symbol displays.	

Monitor Mode Function Display

When power is applied to the AC servo drive, the LED display will show the monitor function code for approximately one second, and then the drive will enter into the monitor mode. To change the monitor function, change parameter P0-02, or press the UP or DOWN keys to change the function directly. **If the monitor function is changed directly by the arrow keys, the new setting is retained only as long as power remains applied to the drive.** If the monitor function is changed through P0-02, the new setting is retained when power is disconnected from the drive. Whenever power is applied, the monitor function is determined by the set value of P0-02. For example, if the value of P0-02 is 6 when power is applied, the monitor function will be Actual Motor Velocity - rpm.

Monitor Mode Function Display			
P0-02 Setting	**Display Message**	**Description**	**Unit**
0	Fb.P	Motor feedback - absolute position	counts
1	Fb.rEu	Motor feedback - absolute position	revs
2	C.P	Position command	counts
3	C.rEu	Position command	revs
4	PErr	Position error (SP - PV pulses)	pulse
5	CP.Fr	Input frequency of pulse command	kHz
6	SPEEd	Actual motor velocity	rpm
7	C.SPd1	Velocity input command	V
8	C.SPd2	Velocity input command	rpm
9	C.t91	Torque input command	V
10	C.t92	Torque input command	%
11	AuG.L	Current load - % of rated torque (average)	%
12	PE.L	Peak load - % of rated torque since power-up	%
13	UbuS	DC Bus voltage	V
14	JL	Ratio of load inertia to motor inertia	J_l / J_m
15	PLS.	Motor feedback - captured position	counts
16	rEu.	Motor feedback - captured position	revs

Polarity Display of Monitor Values

The polarity and decimal places of monitored values will be displayed as shown:

Polarity Display of Monitor Value	
Display Message	**Description**
1 2345	Positive value display; no symbols are displayed to indicate sign.
1 .2.3.4.5.	Negative value display (for parameters with ranges of 5 decimal places); Decimal points following each digit are used to indicate negative value.
-1 2.34	Negative value display (for parameters with ranges of less than 5 decimal places); Negative sign is displayed to indicate negative value.
1 23.45	Decimal value display; Multiple digits with only one decimal point indicate an actual decimal value.

Servo Drive General Operation

Display Fault History

Parameters P4-00 to P4-04 contain the drive fault records. After entering the parameter mode and selecting the desired fault record parameter, press the ENTER key to display the corresponding fault code for that parameter. Press the UP key to scroll through the fault history and display the other fault codes H1 to H5, or press the MODE key to return to the parameters.

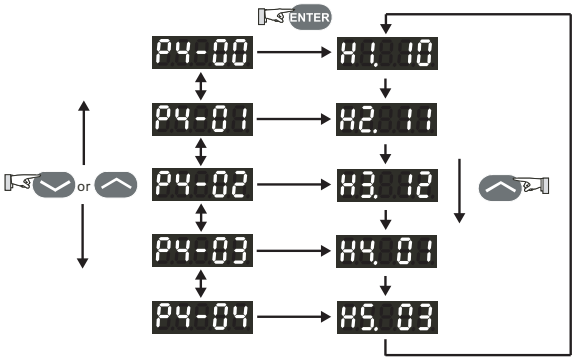

P4-00 and H1 show the most recent fault, P4-01 and H2 show the second most recent fault, and so on through P4-04 and H5 for the fifth most recent fault. The fault codes are explained in the "Maintenance and Troubleshooting" chapter.

For drive firmware versions v2.10 and higher, active **faults** can be **reset** from the keypad by pressing and holding the UP and DOWN Arrow Keys simultaneously for two seconds.

JOG Function

To perform the JOG function, the servo drive must not have any errors present. "Servo Enable" must be active, and the "Fault Stop" input must not be active.

Use the following steps to JOG the servo motor:

(1) Set the JOG Function parameter (P4-05) to the desired jog speed. After selecting and entering the jog speed parameter value, the servo drive will display "JOG".

(2) Press the DOWN key to rotate the motor clockwise (CW), or press UP key to rotate the motor counterclockwise (CCW). The motor will rotate (at the jog speed) only as long as the arrow key is depressed.

(3) Pressing the MODE key will return to parameter P4-05. From there you can change the JOG speed again, or return the servo drive to monitor mode.

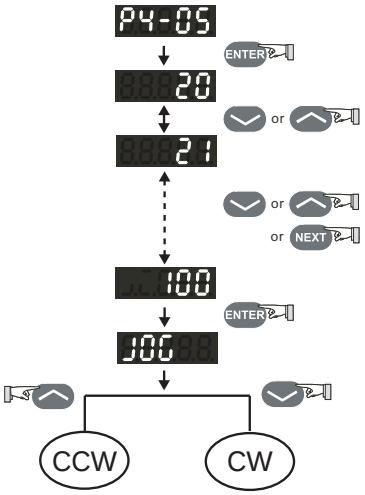

WARNING: **Unexpected and potentially dangerous results can occur if the JOG function is used when the servo drive is configured to run a velocity profile. For example, if you put the drive in JOG mode when it is configured to run a velocity profile, the velocity profile setting will take control and run the servo at the profile setting velocity. Pressing an arrow key will jog the motor at the jog speed while the key is depressed, but the motor will return to the velocity profile setting as soon as the arrow key is released.**

Teach Position Function

The Teach Position function allows users to jog the motor to the desired positions and set those positions as Target Position 1, Target Position 2, etc. In many cases, this method is easier than entering numeric values directly into P1-15 ~ P1-30.

This function should be used only in Pr mode, and only when the drive is set for Absolute Positioning. If the drive is in another control mode, or is set for Incremental Positioning, the operation of the Teach function may not yield the desired results. The teach function is available through the drive keypad, but is not accessible via the Digital Inputs.

Use the following steps to perform the Teach Position function:

(1) Home the servo drive and motor.

(2) Set the Auxiliary Function parameter to Set Teach Position Mode. (ENTER P2-30 = 4)

(3) Set the JOG Function parameter (P4-05) to the desired servo motor jog speed. After selecting and entering the jog speed parameter value, the servo drive will display "JOG01".

(4) Use the DOWN or UP arrow keys to jog the servo motor clockwise or counterclockwise to the desired position.

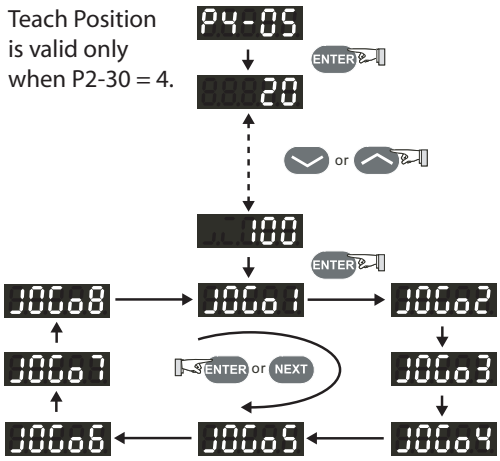

(5) Press the ENTER key to store the JOG01 absolute position of the servo motor into the servo drive memory. The servo drive display will change to show "JOG02".

(6) Repeat steps 4 and 5 to store the other teach absolute positions, as needed.

(7) To scroll from one teach position to the next without saving the previous position in memory, use the NEXT key instead of the ENTER key.

See warning and note on next page regarding the Teach Position Function.

The Teach Positions and associated position parameters are listed below:

Teach Position	Internally Stored Position Parameters
JOG01	P1-15 (Position 1 Command, revolutions); P1-16 (Position 1 Command, counts)
JOG02	P1-17 (Position 2 Command, revolutions); P1-18 (Position 2 Command, counts)
JOG03	P1-19 (Position 3 Command, revolutions); P1-20 (Position 3 Command, counts)
JOG04	P1-21 (Position 4 Command, revolutions); P1-22 (Position 4 Command, counts)
JOG05	P1-23 (Position 5 Command, revolutions); P1-24 (Position 5 Command, counts)
JOG06	P1-25 (Position 6 Command, revolutions); P1-26 (Position 6 Command, counts)
JOG07	P1-27 (Position 7 Command, revolutions); P1-28 (Position 7 Command, counts)
JOG08	P1-29 (Position 8 Command, revolutions); P1-30 (Position 8 Command, counts)

The servo drive should be homed before performing Teach Functions. Although the drive will store absolute positions, the drive will reset it's current position to zero when power is cycled. Without homing, the preset absolute positions may be meaningless.

WARNING: **Unexpected and potentially dangerous results, including personal injury and damage to equipment, can occur if you set up the JOG function and enable the drive while it is in velocity mode and a speed signal is present. Pressing the arrow keys will jog the motor at the jog speed while the key is depressed, but the motor will return to the speed signal setting as soon as the arrow key is released. The Teach Position function is useful only in Pr Mode.**

DO Force Output Function

For test purposes, the digital outputs (DO) can be forced to be active or inactive from the servo drive keypad. (The active or inactive state corresponds to ON or OFF, depending upon the N.O./N.C. setting of P2-18 ~ P2.22.) Use the Force Outputs Command, parameter P4-06, to force the outputs. Select P4-06 and press the ENTER key. The display will then show "OP xx", where xx represents the parameter range from 00 to 1F in **hex** numbers. The two hex digits represent five binary bits which correspond to the five DO. The least significant bit represents DO1, and the most significant bit represents DO5. When the bit = 1 the corresponding DO is active, and when the bit = 0 the corresponding DO is inactive.

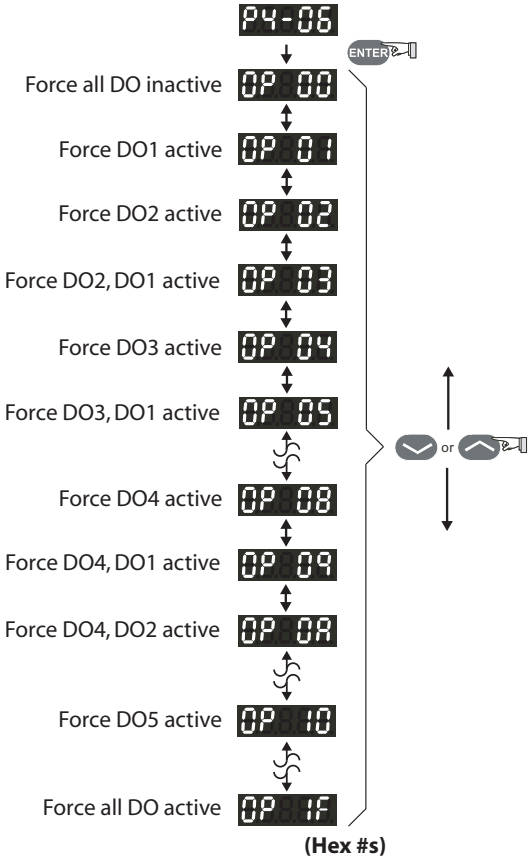

WARNING: **P4-06 takes effect immediately. The outputs change state immediately as the value in P4-06 is incremented or decremented.**

1) The outputs revert to normal operation when you exit P4-06.
2) The force outputs function is intended for test purposes only. It will not function if the servo drive is enabled.

Display Digital Input Status

This function shows the status of the digital inputs (DI) on the servo drive LED display. Select parameter P4-07 and press ENTER. The corresponding LEDs will be on for each DI that is ON.

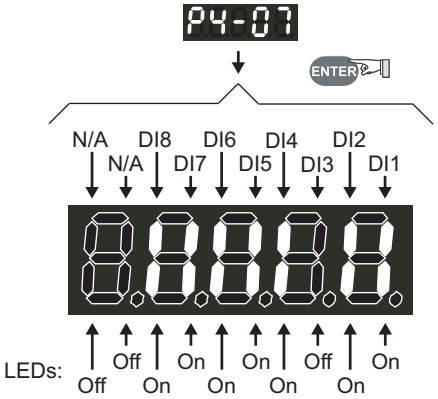

If a DI has been disabled in P2-10 ~ P2-17, it's status will not show on the LED display.

If a DI is configured as N.C. in P2-10 ~ P2.17, it's status will show as ON when it has an open connection.

Display Digital Output Status

This function shows the status of the digital outputs (DO) on the servo drive LED display. Select parameter P4-09 and press ENTER. The corresponding LEDs will be on for each DO that is active.

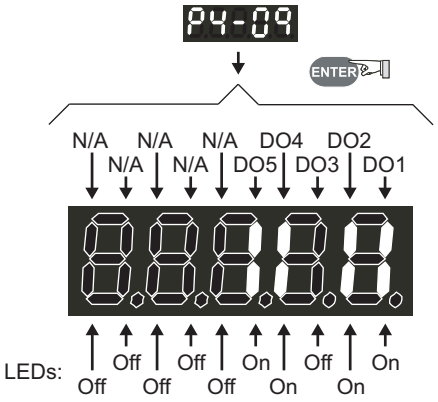

Servo Drive Parameters

Chapter 4

In This Chapter...

Parameter Overview and Note Symbols 4–2

Parameter Groups 4–2

Reset Parameter Defaults 4–2

Abbreviations of Control Modes 4–2

Parameter Summary Notes 4–2

Parameter Summary 4–3

Parameter Firmware Versions 4–3

Parameter Summary Listings 4–3

Detailed Parameter Listings 4–10

Sample Parameter Listing 4–10

Monitor Parameters 4–11

Basic Parameters 4–17

Extended Parameters 4–40

Communication Parameters 4–66

Diagnostic Parameters 4–69

Parameter Overview and Note Symbols

Parameter Groups

The *Sure*Servo™ drive has five parameter groups:

Group 0: Monitor parameters	(example: P0-xx)
Group 1: Basic parameters	(example: P1-xx)
Group 2: Extension parameters	(example: P2-xx)
Group 3: Communication parameters	(example: P3-xx)
Group 4: Diagnostic parameters	(example: P4-xx)

Reset Parameter Defaults

To reset the parameters to the factory default values, set parameter P2-08 to 10.

*The following parameters **do not return to factory default** values after setting P2-08 to 10: P0-04 ~ P0-08, P0-18, P1-31, P4-20, P4-21.*

*Parameters P2-10 ~ P2-22 **may or may not return to factory default** values when switching control modes, depending upon the setting of P1-01. Refer to P1-01 for details regarding how these parameters are defaulted.*

Abbreviations of Control Modes

P:	Position control mode
T:	Torque control mode
V:	Velocity control mode

Parameter Summary Notes

Notes:
1) Read-only register.
2) Parameter cannot be set when the servo drive is enabled.
3) Parameter is effective only after power to the servo drive has been cycled.
4) Parameter setting not written to drive flash memory; not retained when power is off.
5) Parameter does not return to factory default when P2-08 is set to 10.
6) Parameter may or may not return to factory default when switching control modes, depending upon P1-01 setting.
7) Block Transfer Parameters must be entered from the drive keypad.

Parameter values are in decimal format unless otherwise indicated by "h" for hexadecimal.

Parameter Summary

Parameter Firmware Versions

Some parameters and settings are available or changed only in later firmware versions of SureServo drives. Check P0-00 to determine which firmware version you have. Refer to Appendix D for further information regarding changes in latest firmware.

Parameters/settings available/changed in higher firmware versions

Firmware v2.10 Changes:
- P0-02: modified
- P0-17: new parameter
- P1-33: new settings 7 and 8
- P1-56: new parameter
- P2-10~P2-17: modified
- P2-18~P2-22: new setting 10
- P2-32: modified
- P2-64: new parameter
- P2-65: new parameter
- P3-08: new parameter
- P4-07: modified

Firmware v2.105 Changes:
- P0-18: new parameter

Parameter Summary Listings

Group 0: Monitor Parameters

Parameter	Note	Description	Control Mode			Range	Units	Default	Customer Setting
			P	V	T				
P0-00	1,5	Firmware Version	Y	Y	Y	(factory setting)	-	varies	
P0-01	1	Drive Fault Code	Y	Y	Y	0~22	-	N/A	
***P0-02**	-	Drive Status (Front Panel Display)	Y	Y	Y	0~16	-	0	
P0-03	-	Analog Monitor Outputs	Y	Y	Y	0~55	-	1	
P0-04	5	Status Monitor 1	Y	Y	Y	0~16	-	0	
P0-05	5	Status Monitor 2	Y	Y	Y	0~16	-	0	
P0-06	5	Status Monitor 3	Y	Y	Y	0~16	-	0	
P0-07	5	Status Monitor 4	Y	Y	Y	0~16	-	0	
P0-08	5	Status Monitor 5	Y	Y	Y	0~16	-	0	
P0-09	7	Block Transfer Parameter 1	Y	Y	Y	100~417 [h]	-	407[h]	
P0-10	7	Block Transfer Parameter 2	Y	Y	Y	100~417 [h]	-	10F[h]	
P0-11	7	Block Transfer Parameter 3	Y	Y	Y	100~417 [h]	-	110[h]	
P0-12	7	Block Transfer Parameter 4	Y	Y	Y	100~417 [h]	-	224[h]	
P0-13	7	Block Transfer Parameter 5	Y	Y	Y	100~417 [h]	-	111[h]	
P0-14	7	Block Transfer Parameter 6	Y	Y	Y	100~417 [h]	-	112[h]	
P0-15	7	Block Transfer Parameter 7	Y	Y	Y	100~417 [h]	-	225[h]	
P0-16	7	Block Transfer Parameter 8	Y	Y	Y	100~417 [h]	-	109[h]	
***P0-17**	1	Output Functions Status	Y	Y	Y	0~1FF [h]	-	0	
***P0-18**	1,5	Servo On Time Record	Y	Y	Y	0~65535	hr	0	

**** Some parameters vary by firmware version. Refer to Appendix D for revision details.***

Group 1: Basic Parameters									
Parameter	Note	Description	Control Mode			Range	Units	Default	Customer Setting
			P	V	T				
P1-00	2	External Pulse Type Input	Y	-	-	0~132	-	2	
P1-01	3	Control Mode and Output Direction	Y	Y	Y	0~1110	-	0	
P1-02	2	Velocity and Torque Limit	Y	Y	Y	0~11	-	0	
P1-03	-	Output Polarity Setting	Y	Y	Y	0~13	-	0	
P1-04	-	Analog Monitor Output Scaling 1 (ch 1)	Y	Y	Y	0~100	%	100	
P1-05	-	Analog Monitor Output Scaling 2 (ch 2)	Y	Y	Y	0~100	%	100	
P1-06	-	Analog Velocity Command Low-pass Filter	-	Y	-	0~1000	ms	0	
P1-07	-	Analog Torque Command Low-pass Filter	-	-	Y	0~1000	ms	0	
P1-08	-	Position Command Low-pass Filter	Y	-	-	0~1000	10 ms	0	
P1-09	-	Velocity Command 1 (V mode)	-	Y	-	±5000	rpm	100	
		Velocity Limit 1 (T mode)	-	-	Y				
P1-10	-	Velocity Command 2 (V mode)	-	Y	-			200	
		Velocity Limit 2 (T mode)	-	-	Y				
P1-11	-	Velocity Command 3 (V mode)	-	Y	-			300	
		Velocity Limit 3 (T mode)	-	-	Y				
P1-12	-	Torque Command 1 (T mode)	-	-	Y	±300	%	100	
		Torque Limit 1 (P, V modes)	Y	Y	-				
P1-13	-	Torque Command 2 (T mode)	-	-	Y			100	
		Torque Limit 2 (P, V modes)	Y	Y	-				
P1-14	-	Torque Command 3 (T mode)	-	-	Y			100	
		Torque Limit 3 (P, V modes)	Y	Y	-				
P1-15	-	Position Command 1 (revolutions)	Y	-	-	±30,000	revs	0	
P1-16	-	Position Command 1 (counts)				±10,000	counts		
P1-17	-	Position Command 2 (revolutions)	Y	-	-	±30,000	revs	0	
P1-18	-	Position Command 2 (counts)				±10,000	counts		
P1-19	-	Position Command 3 (revolutions)	Y	-	-	±30,000	revs	0	
P1-20	-	Position Command 3 (counts)				±10,000	counts		
P1-21	-	Position Command 4 (revolutions)	Y	-	-	±30,000	revs	0	
P1-22	-	Position Command 4 (counts)				±10,000	counts		
P1-23	-	Position Command 5 (revolutions)	Y	-	-	±30,000	revs	0	
P1-24	-	Position Command 5 (counts)				±10,000	counts		
P1-25	-	Position Command 6 (revolutions)	Y	-	-	±30,000	revs	0	
P1-26	-	Position Command 6 (counts)				±10,000	counts		
P1-27	-	Position Command 7 (revolutions)	Y	-	-	±30,000	revs	0	
P1-28	-	Position Command 7 (counts)				±10,000	counts		
P1-29	-	Position Command 8 (revolutions)	Y	-	-	±30,000	revs	0	
P1-30	-	Position Command 8 (counts)				±10,000	counts		

Group 1: Basic Parameters table continued on next page

Group 1: Basic Parameters (continued)									
Parameter	Note	Description	Control Mode			Range	Units	Default	Customer Setting
			P	V	T				
P1-31	5	Motor Code: SVA-2040 (100~400W)	Y	Y	Y	10, 11, 12	-	10	
		Motor Code: SVA-2100 (750W~1kW)				20, 21, 22		20	
		Motor Code: SVA-2300 (2~3kW)				30, 31		30	
P1-32	-	Motor Stop Mode Selection	Y	Y	Y	0~11	-	0	
*P1-33	3	Position Control Mode (when using internal indexer)	Y	-	-	0~8	-	0	
P1-34	-	Acceleration Time (when using internal indexer)	Y	Y	-	1~20,000	ms	200	
P1-35	-	Deceleration Time (when using internal indexer)	Y	Y	-	1~20,000	ms	200	
P1-36	-	Acceleration/Deceleration S-curve	Y	Y	-	0~10,000	ms	0	
P1-37	-	Inertia Mismatch Ratio	Y	Y	Y	0-200.0	-	5.0	
P1-38	-	Zero Velocity Output Threshold	Y	Y	Y	0~200	rpm	10	
P1-39	-	Target Velocity Output Threshold	Y	Y	Y	0~5000	rpm	3000	
P1-40	2	Analog Full Scale Velocity Command/Limit	Y	Y	Y	0~10,000	rpm	rated	
P1-41	2	Analog Full Scale Torque Command/Limit	Y	Y	Y	0~1000	%	100	
P1-42	-	On Delay Time of Electromagnetic Brake	Y	Y	Y	0~1000	ms	20	
P1-43	-	Off Delay Time of Electromagnetic Brake	Y	Y	Y	0~1000	ms	20	
P1-44	-	Electronic Gear Numerator 1	Y	-	-	1~32,767	counts	1	
P1-45	-	Electronic Gear Denominator	Y	-	-	1~32,767	counts	1	
P1-46	2	Encoder Output Scaling Factor	Y	Y	Y	1~125; 10,020~12,500	-	1	
P1-47	-	Homing Mode	Y	-	-	0~1225	-	0	
P1-48	-	Homing Velocity 1 - Fast Search Velocity	Y	-	-	1~2000	rpm	1000	
P1-49	-	Homing Velocity 2 - Creep Velocity	Y	-	-	1~500	rpm	50	
P1-50	-	Home Position Offset (revolutions)	Y	-	-	±30,000	revs	0	
P1-51	-	Home Position Offset (counts)	Y	-	-	±10,000	counts	0	
P1-52	-	Regenerative Resistor Value	Y	Y	Y	10~750	Ohms	20, 40	
P1-53	-	Regenerative Resistor Capacity	Y	Y	Y	30~1000	W	60, 120	
P1-54	-	In Position Window	Y	-	-	0~10,000	counts	100	
P1-55	-	Maximum Velocity Limit	Y	Y	Y	0~max velocity	rpm	rated	
*P1-56	-	Overload Output Warning Threshold	Y	Y	Y	0~120	%	120	
**** Some parameters vary by firmware version. Refer to Appendix D for revision details.***									

Group 2: Extended Parameters									
Parameter	Note	Description	Control Mode			Range	Units	Default	Customer Setting
			P	V	T				
P2-00	-	Position Loop Proportional Gain (KPP)	Y	-	-	0~1023	rad/s	35	
P2-01	-	Position Loop Gain Boost	Y	-	-	10~500	%	100	
P2-02	-	Position Feed Forward Gain (KFF)	Y	-	-	10~20,000	0.0001	5000	
P2-03	-	Smooth Constant of Position Feed Forward Gain	Y	-	-	2~100	ms	5	
P2-04	-	Velocity Loop Proportional Gain (KVP)	Y	Y	-	0~20,000	rad/s	500	
P2-05	-	Velocity Loop Gain Boost	Y	Y	-	10~500	%	100	
P2-06	-	Velocity Loop Integral Compensation (KVI)	Y	Y	-	0~4095	-	100	
P2-07	-	Velocity Feed Forward Gain (KVF)	-	Y	-	0~20,000	0.0001	0	
P2-08	4	Factory Defaults and Password	Y	Y	Y	0~65,535	-	0	
P2-09	-	Debounce Filter (Contact Suppression)	Y	Y	Y	0~20	2ms	2	
***P2-10**	6	Digital Input Terminal 1 (DI1)	Y	Y	Y	0~145	-	101	
***P2-11**	6	Digital Input Terminal 2 (DI2)						104	
***P2-12**	6	Digital Input Terminal 3 (DI3)						116	
***P2-13**	6	Digital Input Terminal 4 (DI4)						117	
***P2-14**	6	Digital Input Terminal 5 (DI5)						102	
***P2-15**	6	Digital Input Terminal 6 (DI6)						22	
***P2-16**	6	Digital Input Terminal 7 (DI7)						23	
***P2-17**	6	Digital Input Terminal 8 (DI8)						21	
***P2-18**	6	Digital Output Terminal 1 (DO1)	Y	Y	Y	0~110	-	101	
***P2-19**	6	Digital Output Terminal 2 (DO2)						103	
***P2-20**	6	Digital Output Terminal 3 (DO3)						109	
***P2-21**	6	Digital Output Terminal 4 (DO4)						105	
***P2-22**	6	Digital Output Terminal 5 (DO5)						7	
P2-23	-	Notch Filter (Resonance Suppression)	Y	Y	Y	50~1000	Hz	1000	
P2-24	-	Notch Filter Attenuation (Resonance Supp.)	Y	Y	Y	0~32	dB	0	
P2-25	-	Low-pass Filter (Resonance Suppression) SVA-2040	Y	Y	Y	0~1000	ms	2	
		Low-pass Filter (Resonance Suppression) SVA-2100, -2300						5	
P2-26	-	External Anti-Interference Gain (Resonance Suppression)	Y	Y	Y	0~30,000	-	0	
P2-27	-	Gain Boost Control	Y	Y	-	0~4	-	0	
P2-28	-	Gain Boost Switching Time	Y	Y	-	0~1000	10 ms	10	
P2-29	-	Gain Boost Switching Condition	Y	Y	-	0~30,000	counts; kpps; rpm	10,000	

Group 2: Extension Parameters table continued on next page

Group 2: Extended Parameters (continued)									
Parameter	Note	Description	Control Mode			Range	Units	Default	Customer Setting
			P	V	T				
P2-30	4	Auxiliary Function	Y	Y	Y	0~5	-	0	
P2-31	-	Auto and Easy Tuning Mode Response Level	Y	Y	Y	0~FF [h]	-	44[h]	
*P2-32	2	Tuning Mode	Y	Y	Y	0~5	-	0	
P2-33	-	Reserved	-	-	-	-	-	-	
P2-34	-	Overspeed Fault Threshold	-	Y	-	1~5000	rpm	5000	
P2-35	-	Position Deviation Fault Window	Y	-	-	1~30,000	pulse	30,000	
P2-36	-	Position 1 Velocity	Y	-	-	1~5000	rpm	1000	
P2-37	-	Position 2 Velocity						1000	
P2-38	-	Position 3 Velocity						1000	
P2-39	-	Position 4 Velocity						1000	
P2-40	-	Position 5 Velocity						1000	
P2-41	-	Position 6 Velocity						1000	
P2-42	-	Position 7 Velocity						1000	
P2-43	-	Position 8 Velocity						1000	
P2-44	-	Digital Output Mode	Y	-	-	0~1	-	0	
P2-45	-	Index Mode Output Signal Delay Time	Y	-	-	0~250	4 ms	1	
P2-46	-	Index Mode Stations	Y	-	-	2~32	-	6	
P2-47	-	Position Deviation Clear Delay Time	Y	-	-	0~250	20 ms	0	
P2-48	-	Backlash Compensation (Index Mode)	Y	-	-	0~10,312	pulse	0	
P2-49	-	Jitter Suppression	Y	Y	-	0~19	-	0	
P2-50	-	Clear Position Mode	Y	-	-	0~2	-	0	
P2-51	-	Servo Enable Command	Y	Y	Y	0~1	-	0	
P2-52	-	Dwell Time 1 - Auto Index Mode	Y	-	-	0.00~120.00	s	0.00	
P2-53	-	Dwell Time 2 - Auto Index Mode						0.00	
P2-54	-	Dwell Time 3 - Auto Index Mode						0.00	
P2-55	-	Dwell Time 4 - Auto Index Mode						0.00	
P2-56	-	Dwell Time 5 - Auto Index Mode						0.00	
P2-57	-	Dwell Time 6 - Auto Index Mode						0.00	
P2-58	-	Dwell Time 7 - Auto Index Mode						0.00	
P2-59	-	Dwell Time 8 - Auto Index Mode						0.00	
P2-60	-	Electronic Gear Numerator 2	Y	-	-	1~32,767	pulse	1	
P2-61	-	Electronic Gear Numerator 3						1	
P2-62	-	Electronic Gear Numerator 4						1	
P2-63	-	Velocity and Position Deviation Scaling Factor	Y	Y	-	0~11	times	0	
*P2-64	-	Advanced Torque Limit Mode	Y	Y	-	0~3	-	0	
*P2-65	-	Special Input Functions	Y	Y	Y	0~FFFF [h]	bit	0	
*** Some parameters vary by firmware version. Refer to Appendix D for revision details.**									

Group 3: Communication Parameters									
Parameter	Note	Description	Control Mode			Range	Units	Default	Customer Setting
			P	V	T				
P3-00	-	Communication Address	Y	Y	Y	1~254	-	1	
P3-01	-	Transmission Speed	Y	Y	Y	0~5	bps	2	
P3-02	-	Communication Protocol	Y	Y	Y	0~8	-	8	
P3-03	-	Communication Fault Action	Y	Y	Y	0~1	-	0	
P3-04	-	Communication Watchdog Time Out	Y	Y	Y	0~20	s	0	
P3-05	-	Communication Selection	Y	Y	Y	0~2	-	0	
P3-06	-	Reserved	-	-	-	-	-	0[h]	-
P3-07	-	Communication Response Delay Time	Y	Y	Y	0~255	0.5 ms	0	
***P3-08**	-	Digital Input Software Control Mask	Y	Y	Y	0~FFFF [h]	bit	0	
**** Some parameters vary by firmware version. Refer to Appendix D for revision details.***									

Notes:
1) Read-only register.
2) Parameter cannot be set when the servo drive is enabled.
3) Parameter is effective only after power to the servo drive has been cycled.
4) Parameter setting not written to drive flash memory; not retained when power is off.
5) Parameter does not return to factory default when P2-08 is set to 10.
6) Parameter may or may not return to factory default when switching control modes, depending upon P1-01 setting.
7) Block Transfer Parameters must be entered from the drive keypad.

Group 4: Diagnostic Parameters									
Parameter	Note	Description	Control Mode			Range	Units	Default	Customer Setting
			P	V	T				
P4-00	1	Fault Record (N) (most recent)	Y	Y	Y	ALE01~ALE22	-	0	
P4-01	1	Fault Record (N-1)	Y	Y	Y	ALE01~ALE22	-	0	
P4-02	1	Fault Record (N-2)	Y	Y	Y	ALE01~ALE22	-	0	
P4-03	1	Fault Record (N-3)	Y	Y	Y	ALE01~ALE22	-	0	
P4-04	1	Fault Record (N-4)	Y	Y	Y	ALE01~ALE22	-	0	
P4-05	-	Jog Function	Y	Y	Y	1~5000	rpm	20	
P4-06	2	Force Outputs Command	Y	Y	Y	00~1F [h]	-	00[h]	
*P4-07	-	Input Status (with external control)	Y	Y	Y	-	-	-	
		Force Input Command (with software control)				0~FFFF [h]	bit	0[h]	
P4-08	-	Reserved	-	-	-	-	-	-	-
P4-09	-	Output Status	Y	Y	Y	-	-	-	
P4-10	-	Reserved	-	-	-	-	-	-	-
P4-11	-	Reserved	-	-	-	-	-	-	-
P4-12	-	Reserved	-	-	-	-	-	-	-
P4-13	-	Reserved	-	-	-	-	-	-	-
P4-14	-	Reserved	-	-	-	-	-	-	-
P4-15	-	Reserved	-	-	-	-	-	-	-
P4-16	-	Reserved	-	-	-	-	-	-	-
P4-17	-	Reserved	-	-	-	-	-	-	-
P4-18	-	Reserved	-	-	-	-	-	-	-
P4-19	-	Reserved	-	-	-	-	-	-	-
P4-20	5	Analog Monitor 1 Offset (ch 1)	Y	Y	Y	±800	mV	0	
P4-21	5	Analog Monitor 2 Offset (ch 2)	Y	Y	Y	±800	mV	0	
P4-22	-	Analog Velocity Input Offset	-	Y	-	±5000	mV	0	
P4-23	-	Analog Torque Input Offset	-	-	Y	±5000	mV	0	
***** Some parameters vary by firmware version. Refer to Appendix D for revision details.**									

Notes:
1) Read-only register.
2) Parameter cannot be set when the servo drive is enabled.
3) Parameter is effective only after power to the servo drive has been cycled.
4) Parameter setting not written to drive flash memory; not retained when power is off.
5) Parameter does not return to factory default when P2-08 is set to 10.
6) Parameter may or may not return to factory default when switching control modes, depending upon P1-01 setting.
7) Block Transfer Parameters must be entered from the drive keypad.

Detailed Parameter Listings

Sample Parameter Listing

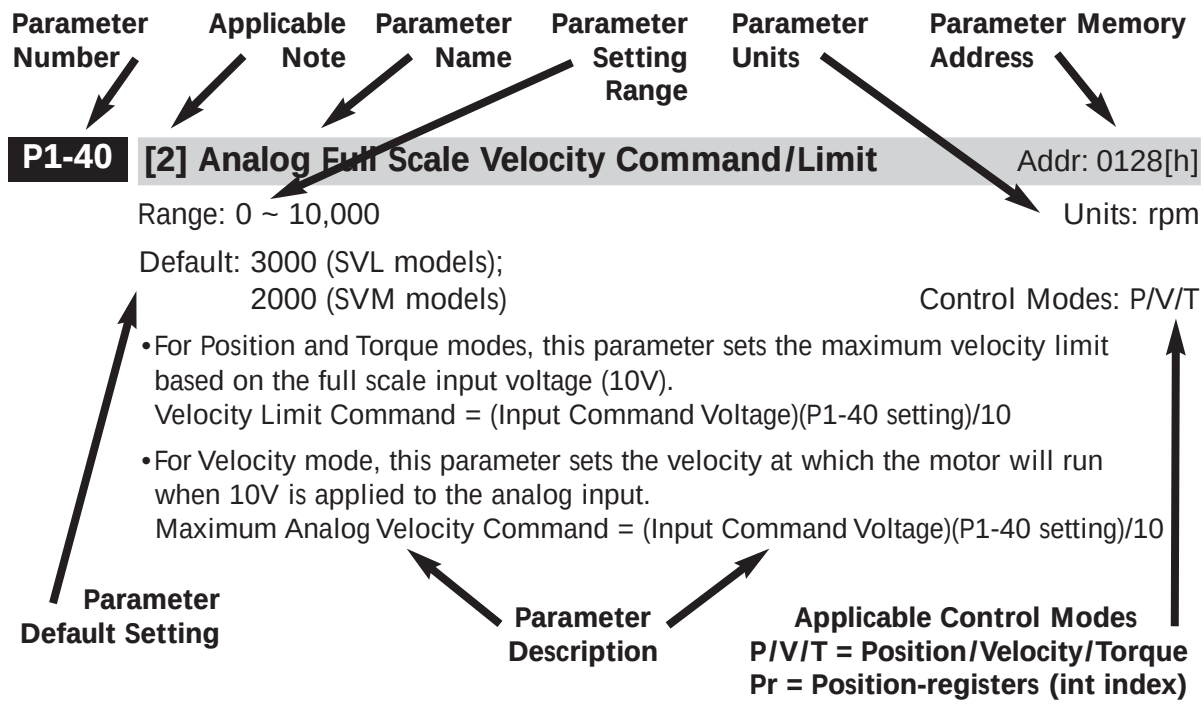

Notes:
1) Read-only register.
2) Parameter cannot be set when the servo drive is enabled.
3) Parameter is effective only after power to the servo drive has been cycled.
4) Parameter setting not written to drive flash memory; not retained when power is off.
5) Parameter does not return to factory default when P2-08 is set to 10.
6) Parameter may or may not return to factory default when switching control modes, depending upon P1-01 setting.
7) Block Transfer Parameters must be entered from the drive keypad.

Parameter values are in decimal format unless otherwise indicated by "h" for hexadecimal.

Monitor Parameters

P0-00 [1] Firmware Version

Mem Addr: 0000[h]

Range: n/a | Units: n/a

Default: (factory setting) | Control Modes: P/V/T

- This parameter shows the software version of the servo drive.

P0-01 [1] Drive Fault Code

Mem Addr: 0001[h]

Range: 0~22 | Units: n/a

Default: n/a | Control Modes: P/V/T

- This parameter shows the current servo drive fault, if the drive is currently faulted.

Settings:

00	No fault occurred
01	Overcurrent
02	Overvoltage
03	Undervoltage
04	Motor overtemperature
05	Regeneration error
06	Overload
07	Overspeed
08	Abnormal pulse control command
09	Excessive deviation
10	Watchdog fault
11	Encoder fault
12	Internal Components Require Calibration
13	Fault stop
14	Reverse limit error (DI setting 22 reverse limit switch activated)
15	Forward limit error (DI setting 23 forward limit switch activated)
16	IGBT temperature error
17	Memory error (internal system error)
18	DSP communication error (internal system error)
19	Serial communication error
20	Serial communication time out
21	DSP to MCU command (internal system error)
22	Input power phase loss

P0-02 Drive Status (front panel display)

Mem Addr: 0002[h]

Range: 0-16 | Units: various
Default: 0 | Control Modes: P/V/T

- This parameter shows the servo drive status.
- This parameter varies by firmware version. For revision details, refer to "Appendix D: Latest *Sure*Servo Firmware Revisions".

Settings:

00	Motor feedback - absolute position (counts) (10,000 counts = 1 rev)
01	Motor feedback - absolute position (revs)
02	Position command (counts)
03	Position command (revs)
04	Position error (counts)
05	Input frequency of pulse command (0.1kHz)
06	Actual motor velocity (rpm)
07	Velocity input command (V)
08	Velocity input command (rpm)
09	Torque input command (V)
10	Torque input command (%)
11	Current load (% of rated torque)
12	Peak load (% of rated torque since powerup)
13	Bus voltage
14	Ratio of load inertia to motor inertia (J_l/J_m)
15	Motor feedback - captured position (counts) (10,000 counts = 1 rev) (motor position in counts relative to the last incremental position command executed)
16	Motor feedback - captured position (revs) (motor position in revolutions relative to the last incremental position command executed)

P0-03 Analog Monitor Outputs

Mem Addr: 0003[h]

Range: 0~55 | Units: n/a
Default: 1 | Control Modes: P/V/T

- This parameter determines the functions of the analog monitor outputs.

Settings:

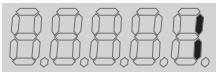

Analog Output Channel 2 Function
Analog Output Channel 1 Function
Unused

Analog Output Function Settings:

0	Motor velocity (± 8V / maximum velocity)
1	Motor torque (± 8V / maximum torque)
2	Pulse command frequency (8V / 650kpps)
3	Velocity command (± 8V / maximum velocity command)
4	Torque command (± 8V / maximum torque command)
5	DC bus voltage (± 8V / 450V)

P0-03 Example:

P0-03 = 3 (Ch2 monitors Velocity Command; Ch1 monitors Motor Velocity)
Ch 2: V_{cmd} = (max velocity cmd)(V_{out}/8V)(P1-04) / 100
Ch 1: V_{motor} = (max velocity)(V_{out}/8V)(P1-05) / 100

Notes:
1) Use P1-04 and P1-05 for analog output scaling.
2) The resolution for both channels is 16V / 1250 counts = 12.8 mV per count.

P0-04 [5] Status Monitor 1 Mem Addr: 0004[h]

Range: 0~16 Units: n/a

Default: 0 Control Modes: P/V/T

- This parameter can be set to provide the value of one of the status monitoring functions found in parameter P0-02.

Example:

Set P0-04 to 06. Then, all subsequent reads of P0-04 will return the actual motor velocity in rpm.

P0-05 [5] Status Monitor 2 Mem Addr: 0005[h]

Range: 0~16 Units: n/a

Default: 0 Control Modes: P/V/T

- Refer to P0-04 for explanation of the Status Monitor parameters P0-04 ~ P0-08.

P0-06 [5] Status Monitor 3 Mem Addr: 0006[h]

Range: 0~16 Units: n/a

Default: 0 Control Modes: P/V/T

- Refer to P0-04 for explanation of the Status Monitor parameters P0-04 ~ P0-08.

P0-07 [5] Status Monitor 4 Mem Addr: 0007[h]

Range: 0~16 Units: n/a

Default: 0 Control Modes: P/V/T

- Refer to P0-04 for explanation of the Status Monitor parameters P0-04 ~ P0-08.

P0-08 [5] Status Monitor 5 Mem Addr: 0008[h]

Range: 0~16 Units: n/a

Default: 0 Control Modes: P/V/T

- Refer to P0-04 for explanation of the Status Monitor parameters P0-04 ~ P0-08.

P0-09 Block Transfer Parameter 1 — Mem Addr: 0009[h]

Range: 100~417 [h] (address for P1-00 ~ P4-23) — Units: n/a

Default: 407[h] (address for P4-07) — Control Modes: P/V/T

- The block transfer parameters P0-09 through P0-16 are used to "group" parameters together consecutively for efficient access via block transfers when using Modbus communications. Use the **keypad** to enter the **hexadecimal** memory **address** of the desired parameter number (i.e. enter P1-15 as 10F; P4-07 as 407) into the block transfer parameter. Serial communication (Modbus) reads and writes will affect the block transfer parameter's data; not the address.

Block Transfer Parameters P0-09 ~ P0-16 must be entered from the drive keypad.

P0-10 Block Transfer Parameter 2 — Mem Addr: 000A[h]

Range: 100~417 [h] (address for P1-00 ~ P4-23) — Units: n/a

Default: 10F[h] (address for P1-15) — Control Modes: P/V/T

- Refer to P0-09 for explanation of the Block Transfer parameters P0-09 ~ P0-16.

P0-11 Block Transfer Parameter 3 — Mem Addr: 000B[h]

Range: 100~417 [h] (address for P1-00 ~ P4-23) — Units: n/a

Default: 110[h] (address for P1-16) — Control Modes: P/V/T

- Refer to P0-09 for explanation of the Block Transfer parameters P0-09 ~ P0-16.

P0-12 Block Transfer Parameter 4 — Mem Addr: 000C[h]

Range: 100~417 [h] (address for P1-00 ~ P4-23) — Units: n/a

Default: 224[h] (address for P2-36) — Control Modes: P/V/T

- Refer to P0-09 for explanation of the Block Transfer parameters P0-09 ~ P0-16.

P0-13 Block Transfer Parameter 5 — Mem Addr: 000D[h]

Range: 100~417 [h] (address for P1-00 ~ P4-23) — Units: n/a

Default: 111[h] (address for P1-17) — Control Modes: P/V/T

- Refer to P0-09 for explanation of the Block Transfer parameters P0-09 ~ P0-16.

P0-14 Block Transfer Parameter 6

Mem Addr: 000E[h]

Range: 100~417 [h] (address for P1-00 ~ P4-23) Units: n/a

Default: 112[h] (address for P1-18) Control Modes: P/V/T

- Refer to P0-09 for explanation of the Block Transfer parameters P0-09 ~ P0-16.

P0-15 Block Transfer Parameter 7

Mem Addr: 000F[h]

Range: 100~417 [h] (address for P1-00 ~ P4-23) Units: n/a

Default: 225[h] (address for P2-37) Control Modes: P/V/T

- Refer to P0-09 for explanation of the Block Transfer parameters P0-09 ~ P0-16.

P0-16 Block Transfer Parameter 8

Mem Addr: 0010[h]

Range: 100~417 [h] (address for P1-00 ~ P4-23) Units: n/a

Default: 109[h] (address for P1-09) Control Modes: P/V/T

- Refer to P0-09 for explanation of the Block Transfer parameters P0-09 ~ P0-16.

P0-17 [1] Output Function Status

Mem Addr: 0011[h]

Range: 0~1FF [h] Units: n/a

Default: 0 Control Modes: P/V/T

- This parameter allows you to read the status of the DO Functions via MODBUS communications, regardless of whether or not those functions are assigned to physical digital outputs (DO1~DO5).
- This parameter varies by firmware version. For revision details, refer to "Appendix D: Latest *Sure*Servo Firmware Revisions".

DO Functions Indications:

bit 0	Servo Ready (no faults)
bit 1	Servo On (enabled)
bit 2	At Zero Velocity
bit 3	At Velocity Reached
bit 4	At Position
bit 5	At Torque Limit
bit 6	Overload Warning
bit 7	Active Fault
bit 8	Electromagnetic Brake Control
bit 9~15	reserved

P0-18 [1][5] Servo On Time Record

Mem Addr: 0012[h]

Range: 0 ~ 65,535 Units: hr

Default: 0 Control Modes: P/V/T

- This parameter stores and displays the total time that the servo drive is ON. It is written to EEPROM once per hour.

Basic Parameters

P1-00 **[2] External Pulse Input Type** Mem Addr: 0100[h]

Range: 0~132 Units: n/a

Default: 2 Control Modes: P

- This parameter determines the input pulse type and polarity.

Settings:

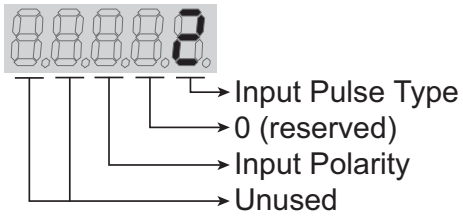

Input Pulse Type Settings:

0	Quadrature Input
1	Clockwise (CW) and Counterclockwise (CCW) Pulse Inputs
2	Pulse and Direction Inputs

Input Polarity Settings:

0	Positive Logic (Active High)
1	Negative Logic (Active Low)

Pulse Type	Polarity			
	0 = Positive Logic		1 = Negative Logic	
	Forward	Reverse	Forward	Reverse
Quad	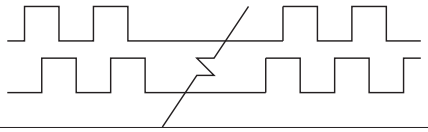		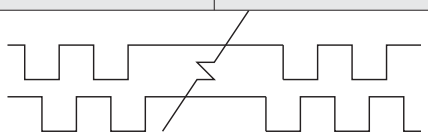	
CW & CCW	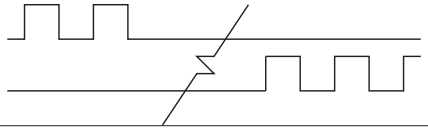		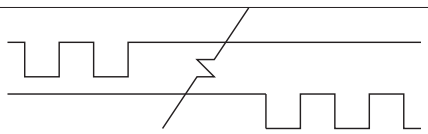	
Pulse & Direction	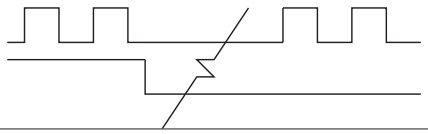		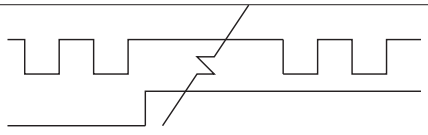	

Input Pulse Interface	Maximum Input Pulse Frequency
Line Driver	500 kpps
Open Collector	200 kpps

P1-01 [3] Control Mode and Output Direction

Mem Addr: 0101[h]

Range: 0~1110 Units: n/a

Default: 0 Control Modes: P/V/T

- This parameter determines the control mode and output direction.

Settings:

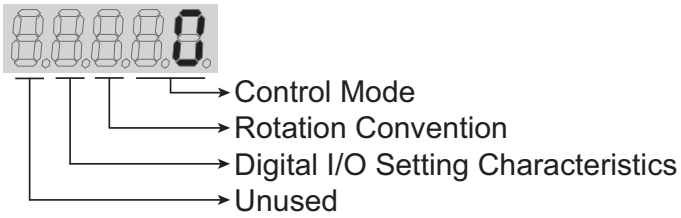

Control Mode												
Mode	Mode Description	Control Mode Settings										
		00	01	02	03	04	05	06	07	08	09	10
Pt	Position Control (external command)	X	-	-	-	-	-	X	X	-	-	-
Pr	Position Control (internal command)	-	X	-	-	-	-	-	-	X	X	-
V	Velocity Control (internal or external command)	-	-	X	-	-	-	X	-	X	-	X
T	Torque Control (internal or external command)	-	-	-	X	-	-	-	X	-	X	X
Vz	Zero Velocity Control (internal command)	-	-	-	-	X	-	-	-	-	-	-
Tz	Zero Torque Control (internal command)	-	-	-	-	-	X	-	-	-	-	-

Note: For detailed mode descriptions, refer to the "SureServo Control Modes of Operation" table in Chapter 5 of this manual.

Rotation Convention		
Direction	Rotation Settings	
	0	1
Forward	ccw	cw
Reverse	cw	ccw

Digital I/O Setting Characteristics	
Characteristic Settings	Settings of P2-10~P2-22 digital I/O functions when switching to new control mode
0	retain previous settings
1	change to default settings of new mode

P1-02 [2] Velocity and Torque Limit

Mem Addr: 0102[h]

Range: 0~11 Units: n/a
Default: 0 Control Modes: P/V/T

- This parameter determines whether the Velocity and Torque Limit functions are enabled or disabled. The source of the limit command (analog input or preset parameter) is then selected by the applicable Command Select digital input.
- For Torque Limits in modes P and V, analog input and preset parameter limits can be used simultaneously by setting this parameter in conjuntion with P2-64.

Settings:

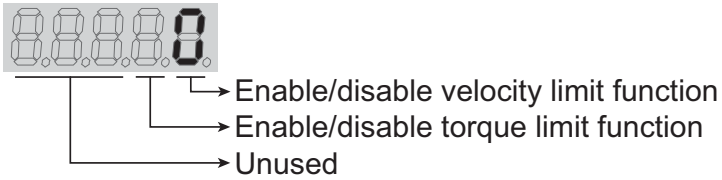

Velocity Limit Function Settings:

0	Disable velocity limit function
1	Enable velocity limit function (valid only in torque mode)

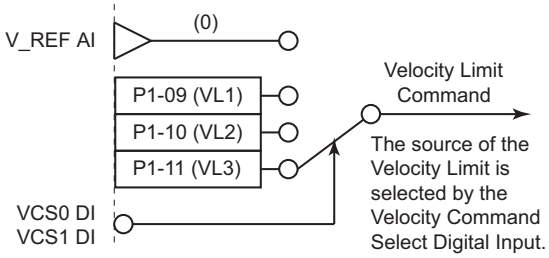

VCS_ DI = Velocity Command Select 0 and 1 Digital Input (P2-10 ~ P2-17 settings 14 and 15)

Torque Limit Function Settings:

0	Disable torque limit function
1	Enable torque limit function (valid only in position and velocity modes)

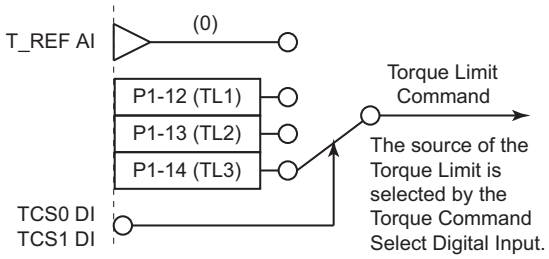

TCS_ DI = Torque Command Select 0 and 1 Digital Input (P2-10 ~ P2-17 settings 16 and 17)

Velocity Limit Selection (Torque Mode)

DI Signal		Velocity Limit Source	Range
VCS1(15)	VCS0(14)		
0	0	V_REF AI (T mode)	±10V
		Limit = 0 (Tz mode)	0
0	1	P1-09	±5000rpm
1	0	P1-10	±5000rpm
1	1	P1-11	±5000rpm

VCS = Velocity Command Select DI function; P2-10~P2-17 settings 14 (VCS0) & 15 (VCS1).

Torque Limit Selection (Position & Velocity Modes)

DI Signal		Torque Limit Source	Range
TCS1(17)	TCS0(16)		
0	0	T_REF AI (Pt, V modes)	±10V
		Limit = 0 (Pr, Vz modes)	0
0	1	P1-12	±300%
1	0	P1-13	±300%
1	1	P1-14	±300%

TCS = Torque Command Select DI function; P2-10~P2-17 settings 16 (TCS0) & 17 (TCS1).

P1-03 Output Polarity Setting

Mem Addr: 0103[h]

Range: 0~13 | Units: n/a
Default: 0 | Control Modes: P/V/T

- This parameter determines the polarity of the Analog Monitor Outputs and Position Pulse Outputs. The Analog Monitor Outputs can be individually configured with different polarities, but the Position Pulse Outputs must each have the same polarity.

Settings:

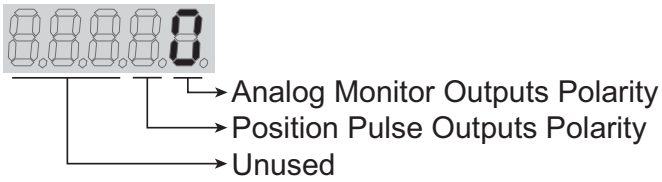

Analog Monitor Outputs Polarity Settings:

0	Analog Monitor Output 1 = (+); Analog Monitor Output 2 = (+)
1	Analog Monitor Output 1 = (+); Analog Monitor Output 2 = (-)
2	Analog Monitor Output 1 = (-); Analog Monitor Output 2 = (+)
3	Analog Monitor Output 1 = (-); Analog Monitor Output 2 = (-)

Position Pulse Outputs Polarity Settings:

0	Forward (Output direction is same as motor rotation per P1-01)
1	Reverse (Output direction is opposite of motor rotation per P1-01)

P1-04 Analog Monitor Output Scaling 1 (ch 1)

Mem Addr: 0104[h]

Range: 0~100 | Units: %
Default: 100 | Control Modes: P/V/T

- This parameter scales the output monitor voltage with respect to the full scaling of the variable being monitored.

P1-04 Example; (For P0-03 = 00; motor max velocity = 5000rpm):

1) If P1-04 = 100, then the ±8V AO range represents ±5000rpm
2) If P1-04 = 50, then the ±8V AO range represents ±2500rpm

P1-05 Analog Monitor Output Scaling 2 (ch 2)

Mem Addr: 0105[h]

Range: 0~100 | Units: %
Default: 100 | Control Modes: P/V/T

- Refer to P1-04 for explanation of Analog Monitor Output Scaling parameters.

P1-06 Analog Velocity Command Low-Pass Filter

Mem Addr: 0106[h]

Range: 0~1000 (0 = disable) Units: ms

Default: 0 Control Modes: V

- This parameter determines the maximum frequency that is allowed to pass into the velocity control loop. Increasing the parameter value lowers the maximum frequency. (The maximum frequency is the reciprocal of this parameter.)
  $f = 1 / t$
- Example: Setting P1-06 = 1 allows 1kHz and lower frequencies to pass:
  $f_{max} = 1 / (P1\text{-}06) = 1 / 0.001s = 1kHz$
- Setting this parameter value too high may result in sluggish responses to setpoint command changes.

P1-07 Analog Torque Command Low-Pass Filter

Mem Addr: 0107[h]

Range: 0~1000 (0 = disable) Units: ms

Default: 0 Control Modes: T

- Refer to P1-06 for explanation of Analog Command Low-Pass Filter parameters.

P1-08 Position Command Low-Pass Filter

Mem Addr: 0108[h]

Range: 0~1000 (0 = disable) Units: 10 ms

Default: 0 Control Modes: P

- This parameter sets the length of time that changes in Position Commands take to reach the position control loop. By the default setting (0), any Position Command will be instantaneously applied to the control loop.

Refer to the “Control Modes of Operation...” chapter for further information.

P1-09 Velocity Command 1 (Velocity Mode) Velocity Limit 1 (Torque Mode)

Mem Addr: 0109[h]

Range: ±5000 Units: rpm
Default: 100 Control Modes: V/T

- When in Velocity Mode using the Internal Indexer, this parameter sets Velocity Command #1.
- When in Torque Mode using the Internal Indexer, this parameter sets Velocity Limit #1.
- Velocity Command Source Selection:

Velocity Command/Limit Source Selection			
DI Signal:		Velocity Command Source	Velocity Limit Source
VCS1 (15)	VCS0 (14)		
Off	Off	V Mode: V_REF analog input Vz Mode: Velocity = 0 (no drift)	T Mode: V_REF analog input Tz Mode: Limit = 0
Off	On	P1-09	
On	Off	P1-10	
On	On	P1-11	
VCS = Velocity Command Select DI function; P2-10~P2-17 settings 14 (VCS0) & 15 (VCS1).			

Note: The Velocity Command/Limit parameters P1-09~P1-11 can be scaled using parameter P2-63.

P1-10 Velocity Command 2 (Velocity Mode) Velocity Limit 2 (Torque Mode)

Mem Addr: 010A[h]

Range: ±5000 Units: rpm
Default: 200 Control Modes: V/T

- Velocity Command #2.
- Velocity Limit #2.
- Refer to P1-09 for further explanation and note.

P1-11 Velocity Command 3 (Velocity Mode) Velocity Limit 3 (Torque Mode)

Mem Addr: 010B[h]

Range: ±5000 Units: rpm
Default: 300 Control Modes: V/T

- Velocity Command #3.
- Velocity Limit #3.
- Refer to P1-09 for further explanation and note.

P1-12 Torque Command 1 (Torque Mode) / Torque Limit 1 (Position/Velocity Modes)

Mem Addr: 010C[h]

Range: ±300 Units: %
Default: 100 Control Modes: P/V/T

- When in Torque Mode using the Internal Indexer, this parameter sets Torque Command #1.
- When in Position or Velocity Modes using the Internal Indexer, this parameter sets Torque Limit #1. When used in conjunction with P2-64 Advanced Torque Limit, P1-12 sets the Negative Torque Limit.
- Parameters P1-12 through P1-14 set the thresholds that are used to determine when the Torque Limit digital output becomes active. Parameters P2-19 through P2-22 assign the digital output functions.

Torque Command/Limit Source Selection			
DI Signal:		Torque Command Source	Torque Limit Source
TCS1 (17)	TCS0 (16)		
Off	Off	T Mode: T_REF analog input Tz Mode: Torque = 0	Pt, V Modes: T_REF analog input Pr, Vz Modes: Limit = 0
Off	On	P1-12	
On	Off	P1-13	
On	On	P1-14	
TCS = Torque Command Select DI function; P2-10~P2-17 settings 16 (TCS0) & 17 (TCS1).			

P1-13 Torque Command 2 (Torque Mode) / Torque Limit 2 (Position/Velocity Modes)

Mem Addr: 010D[h]

Range: ±300 Units: %
Default: 100 Control Modes: P/V/T

- Torque Command #2.
- Torque Limit #2.
- Positive Torque Limit in P or V Modes when used in conjunction with P2-64.
- Refer to P1-12 for further explanation and note.

P1-14 Torque Command 3 (Torque Mode) / Torque Limit 3 (Position/Velocity Modes)

Mem Addr: 010E[h]

Range: ±300 Units: %
Default: 100 Control Modes: P/V/T

- Torque Command #3.
- Torque Limit #3.
- Refer to P1-12 for further explanation and note.

P1-15 Position 1 Command (Revolutions)

Mem Addr: 010F[h]

Range: ± 30,000 Units: revs
Default: 0 Control Modes: Pr

- This parameter sets the number of revolutions for Position 1 Command when using the Internal Indexer. Refer to P1-16 for Position Command (counts).
- Position Command selection:

Position Command Pr Source Selection								
DI Signal:			Position Command Parameters		DI Signal:			Position Command Parameters
PCS2(13)	PCS1(12)	PCS0(11)			PCS2(13)	PCS1(12)	PCS0(11)	
Off	Off	Off	P1-15, P1-16		On	Off	Off	P1-23, P1-24
Off	Off	On	P1-17, P1-18		On	Off	On	P1-25, P1-26
Off	On	Off	P1-19, P1-20		On	On	Off	P1-27, P1-28
Off	On	On	P1-21, P1-22		On	On	On	P1-29, P1-30
Note: Pt mode accepts pulse inputs.								
PCS = Position Command Select DI function; P2-10~P2-17 settings 11 (PCS0), 12 (PCS1), 13 (PCS2).								

P1-16 Position 1 Command (Counts)

Mem Addr: 0110[h]

Range: ± 10,000 Units: encoder counts
Default: 0 Control Modes: Pr

- This parameter sets the number of encoder pulses for Position 1 Command when using the Internal Indexer. Refer to P1-15 for Position Command (revs).
- Refer to P1-15 for Position Command source selection.
- Determine the total number of commanded pulses for Position 1 as follows:
  Pos 1 Command = [(P1-15) (10,000)] + (P1-16)
  Example: For 1.5 revolutions, set P1-15 = 1, and set P1-16 = 5000.

P1-17 Position 2 Command (Revolutions)

Mem Addr: 0111[h]

Range: ± 30,000 Units: revs
Default: 0 Control Modes: Pr

- This parameter sets the number of revolutions for Position 2 Command when using the Internal Indexer. Refer to P1-18 for Position Command (counts).
- Refer to P1-15 for Position Command source selection.

P1-18 Position 2 Command (Counts)

Mem Addr: 0112[h]

Range: ± 10,000 Units: encoder counts
Default: 0 Control Modes: Pr

- This parameter sets the number of encoder pulses for Position 2 Command when using the Internal Indexer. Refer to P1-17 for Position Command (revs).
- Refer to P1-15 for Position Command source selection.
- Determine the total number of commanded pulses for Position 2 as follows:
  Pos 2 Command = [(P1-17) (10,000)] + (P1-18)

P1-19 Position 3 Command (Revolutions) Mem Addr: 0113[h]

Range: ± 30,000 Units: revs
Default: 0 Control Modes: Pr

- This parameter sets the number of revolutions for Position 3 Command when using the Internal Indexer. Refer to P1-20 for Position Command (counts).
- Refer to P1-15 for Position Command source selection.

P1-20 Position 3 Command (Counts) Mem Addr: 0114[h]

Range: ± 10,000 Units: encoder counts
Default: 0 Control Modes: Pr

- This parameter sets the number of encoder pulses for Position 3 Command when using the Internal Indexer. Refer to P1-19 for Position Command (revs).
- Refer to P1-15 for Position Command source selection.
- Determine the total number of commanded pulses for Position 3 as follows: Pos 3 Command = [(P1-19) (10,000)] + (P1-20)

P1-21 Position 4 Command (Revolutions) Mem Addr: 0115[h]

Range: ± 30,000 Units: revs
Default: 0 Control Modes: Pr

- This parameter sets the number of revolutions for Position 4 Command when using the Internal Indexer. Refer to P1-22 for Position Command (counts).
- Refer to P1-15 for Position Command source selection.

P1-22 Position 4 Command (Counts) Mem Addr: 0116[h]

Range: ± 10,000 Units: encoder counts
Default: 0 Control Modes: Pr

- This parameter sets the number of encoder pulses for Position 4 Command when using the Internal Indexer. Refer to P1-21 for Position Command (revs).
- Refer to P1-15 for Position Command source selection.
- Determine the total number of commanded pulses for Position 4 as follows: Pos 4 Command = [(P1-21) (10,000)] + (P1-22)

P1-23 Position 5 Command (Revolutions)

Mem Addr: 0117[h]

Range: ± 30,000 Units: revs
Default: 0 Control Modes: Pr

- This parameter sets the number of revolutions for Position 5 Command when using the Internal Indexer. Refer to P1-24 for Position Command (counts).
- Refer to P1-15 for Position Command source selection.

P1-24 Position 5 Command (Counts)

Mem Addr: 0118[h]

Range: ± 10,000 Units: encoder counts
Default: 0 Control Modes: Pr

- This parameter sets the number of encoder pulses for Position 5 Command when using the Internal Indexer. Refer to P1-23 for Position Command (revs).
- Refer to P1-15 for Position Command source selection.
- Determine the total number of commanded pulses for Position 5 as follows:
  Pos 5 Command = [(P1-23) (10,000)] + (P1-24)

P1-25 Position 6 Command (Revolutions)

Mem Addr: 0119[h]

Range: ± 30,000 Units: revs
Default: 0 Control Modes: Pr

- This parameter sets the number of revolutions for Position 6 Command when using the Internal Indexer. Refer to P1-26 for Position Command (counts).
- Refer to P1-15 for Position Command source selection.

P1-26 Position 6 Command (Counts)

Mem Addr: 011A[h]

Range: ± 10,000 Units: encoder counts
Default: 0 Control Modes: Pr

- This parameter sets the number of encoder pulses for Position 6 Command when using the Internal Indexer. Refer to P1-25 for Position Command (revs).
- Refer to P1-15 for Position Command source selection.
- Determine the total number of commanded pulses for Position 6 as follows:
  Pos 6 Command = [(P1-25) (10,000)] + (P1-26)

P1-27 Position 7 Command (Revolutions) Mem Addr: 011B[h]

Range: ± 30,000 Units: revs
Default: 0 Control Modes: Pr

- This parameter sets the number of revolutions for Position 7 Command when using the Internal Indexer. Refer to P1-28 for Position Command (counts).
- Refer to P1-15 for Position Command source selection.

P1-28 Position 7 Command (Counts) Mem Addr: 011C[h]

Range: ± 10,000 Units: encoder counts
Default: 0 Control Modes: Pr

- This parameter sets the number of encoder pulses for Position 7 Command when using the Internal Indexer. Refer to P1-27 for Position Command (revs).
- Refer to P1-15 for Position Command source selection.
- Determine the total number of commanded pulses for Position 7 as follows: Pos 7 Command = [(P1-27) (10,000)] + (P1-28)

P1-29 Position 8 Command (Revolutions) Mem Addr: 011D[h]

Range: ± 30,000 Units: revs
Default: 0 Control Modes: Pr

- This parameter sets the number of revolutions for Position 8 Command when using the Internal Indexer. Refer to P1-30 for Position Command (counts).
- Refer to P1-15 for Position Command source selection.

P1-30 Position 8 Command (Counts) Mem Addr: 011E[h]

Range: ± 10,000 Units: encoder counts
Default: 0 Control Modes: Pr

- This parameter sets the number of encoder pulses for Position 8 Command when using the Internal Indexer. Refer to P1-29 for Position Command (revs).
- Refer to P1-15 for Position Command source selection.
- Determine the total number of commanded pulses for Position 8 as follows: Pos 8 Command = [(P1-29) (10,000)] + (P1-30)

P1-31 [5] Motor Code

Mem Addr: 011F[h]

Range: 10, 11, 12, 20, 21, 22, 30, 31 — Units: n/a

Default: 10 (SVA-2040)
20 (SVA-2100)
30 (SVA-2300) — Control Modes: P/V/T

- Enter the Motor Code number of the servo motor controlled by the servo drive.

Settings:

Code:	Motor:	Drive:
10	SVL-201(B)	SVA-2040
11	SVL-202(B)	SVA-2040
12	SVL-204(B)	SVA-2040
20	SVL-207(B)	SVA-2100
21	SVL-210(B)	SVA-2100
22	SVM-210(B)	SVA-2100
30	SVM-220(B)	SVA-2300
31	SVM-230(B)	SVA-2300

P1-32 Motor Stop Mode Selection

Mem Addr: 0120[h]

Range: 00, 01, 10, 11 — Units: n/a

Default: 0 — Control Modes: P/V/T

- This parameter determines the stop mode when a fault occurs (limit switch triggers, fault-stop detected, serial communication error, etc.). The parameter does not affect the operation of the mechanical spring-load brake mechanism in brake motors (SVx-2xxB types).

Settings:

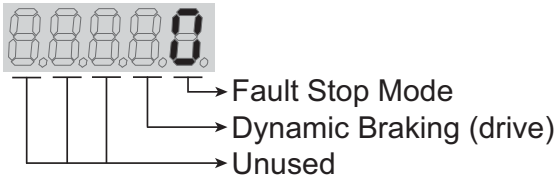

Fault Stop Mode Settings:

0 Stop instantly (using dynamic braking)
1 Decelerate to stop (using preset deceleration settings)

Dynamic Braking (drive) settings; behavior when Servo On status signal is inactive (These settings do NOT apply to motor mechanical braking):

0 Use dynamic braking when drive is disabled
1 Allow motor to coast to stop when drive is disabled

P1-33 [3] Position Control Mode (Internal Indexer) Mem Addr: 0121[h]

Range: 0~6 Units: n/a

Default: 0 Control Modes: Pr

- This parameter determines the specific type of control when using Pr control mode (P1-01) with the internal indexer. (Refer to Control Modes Chapter 5 for explanation and examples of Index Mode and internal position indexing.)
- This parameter varies by firmware version. For revision details, refer to "Appendix D: Latest *Sure*Servo Firmware Revisions".

Settings:

0 Absolute Position Mode (Absolute Positioning):
The system will move to new positions based on the values set in P1-15 ~ P1-30, which are interpreted as target positions referenced from the home position.

1 Incremental Position Mode (Incremental Positioning):
The system will move to new positions based on the values set in P1-15 ~ P1-30, which are interpreted as distances to move from the current position.

2 Forward Operation Index Mode:
The system will go to the programmed index position only in the forward direction.

3 Reverse Operation Index Mode:
The system will go to the programmed index position only in the reverse direction.

4 Shortest Path Index Mode:
The system will go to the programmed index position by determining and using the shortest path and direction.

5 Absolute Auto Position Mode:
The system will move to new positions, referenced from the home position, based on the Auto Position Mode internal function.

6 Incremental Auto Position Mode
The system will move to new positions, referenced from the current position, based on the Auto Position Mode internal function.

7 Absolute One-Cycle Auto-Running Mode:
This setting operates the same as setting #5, except that the DI acts as an edge trigger, and initiates only one cycle.

8 Incremental One-Cycle Auto-Running Mode:
This setting operates the same as setting #6, except that the DI acts as an edge trigger, and initiates only one cycle.

P1-34 Acceleration Time (Internal Indexer)

Mem Addr: 0122[h]

Range: 1 ~ 20,000 Units: ms
Default: 200 Control Modes: Pr/V

- When parameter settings are used as velocity commands (Internal Indexer), this parameter sets the motor acceleration rate.
- When parameter settings are used as position commands (Internal Indexer), this parameter sets both acceleration and deceleration ramps for forward direction.
- The value entered into this parameter sets the time required to accelerate from 0 to the Maximum Velocity Limit setting of P1-55. That same rate of acceleration, or slope, is then used for acceleration to any velocity.

  Example:
  P1-55 = 3000 rpm
  P1-34 = 200 ms
  P1-34 acceleration rate = 3000rpm / 200ms = 15000 rpm/s
  P1-34 acceleration time @ 0~9,000 rpm = 9000rpm / 15000rpm/s = 600ms

- The total acceleration time can be calculated as follows:

  $t_{accel\ total} = t_{P1\text{-}34} + t_{P1\text{-}36}$

Note: This parameter is valid only when P1-36 ≠ 0.

P1-35 Deceleration Time (Internal Indexer)

Mem Addr: 0123[h]

Range: 1 ~ 20,000 Units: ms
Default: 200 Control Modes: Pr/V

- This parameter sets the motor deceleration rate when parameter settings are used as velocity commands (Internal Indexer).
- When parameter settings are used as position commands (Internal Indexer), this parameter sets both acceleration and deceleration ramps for reverse direction.
- The value entered into this parameter sets the time required to decelerate to 0 rpm from the Maximum Velocity Limit setting of P1-55. That same rate of deceleration, is then used for deceleration from any velocity, as described above in P1-34 for acceleration.
- The total deceleration time can be calculated as follows:

  $t_{decel\ total} = t_{P1\text{-}35} + t_{P1\text{-}36}$

Note: This parameter is valid only when P1-36 ≠ 0.

P1-36 Accel/Decel S-Curve

Mem Addr: 0124[h]

Range: 0 ~ 10,000 Units: ms
Default: 0 Control Modes: Pr/V

- This parameter allows the motor and load to be accelerated and decelerated more smoothly.

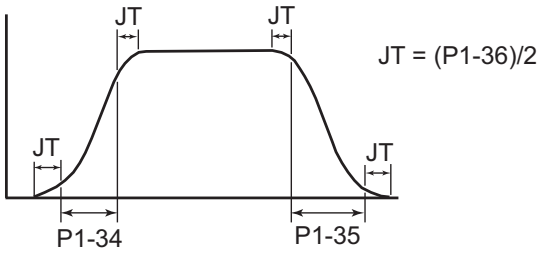

P1-37 Inertia Mismatch Ratio

Mem Addr: 0125[h]

Range: 0 ~ 200.0 Units: n/a

Default: 5.0 Control Modes: P/V/T

- This parameter represents the ratio of the load inertia to the servo motor inertia: (J_{load} / J_{motor}).

P1-38 Zero Velocity Output Threshold

Mem Addr: 0126[h]

Range: 0 ~ 200 Units: rpm

Default: 10 Control Modes: P/V/T

- This parameter sets the velocity command level below which the Low Velocity Clamp digital input (P2-10~P2.17 = 05) stops and holds the motor, and the At Zero Velocity digital output (P2-18~P2.22 = 03) becomes active.

IF: 1) Motor velocity command ≤ P1-38 and
2) Low Velocity Clamp DI is active
(both conditions must be met).

THEN: 1) Motor velocity immediately drops to zero,
2) Drive holds motor in position (0 rpm with holding torque),
3) At Zero Velocity DO becomes active.

- P1-38 has no effect unless the Low Velocity Clamp DI is active.
- Low Velocity Clamp DI has no effect unless motor velocity command ≤ P1-38.

P1-39 Target Velocity Output Threshold

Mem Addr: 0127[h]

Range: 0 ~ 5000 Units: rpm
Default: 3000 Control Modes: P/V/T

- This parameter sets the threshold used to determine when the At Command Velocity digital output becomes active. For example, the At Command Velocity output will be active by default when the motor velocity is equal to or greater than the current commanded velocity. (The digital output functions are assigned by parameters P2-19 through P2-22.)

P1-40 [2] Analog Full Scale Velocity Command (Velocity Mode) [2] Analog Full Scale Velocity Limit (P & T Modes) Mem Addr: 0128[h]

Range: 0 ~ 10,000 Units: rpm
Default: 3000 (SVL models)
2000 (SVM models) Control Modes:P/V/T

- In Position and Torque Modes, this parameter sets the maximum velocity limit based on the full scale input analog voltage (10V).
  Velocity Limit Command = (Input V) (P1-40) / 10V
- In Velocity Mode, this parameter sets the range of the Velocity Command in rpm for a velocity input range from 0V to 10V. (The same range applies in the negative direction from 0V to -10V, if there is no offset.) (P4-22 can be used to provide an offset, such that a non-zero input generates a zero rpm command.)
  Velocity Command = (Input V) (P1-40) / 10V

P1-41 [2] Analog Full Scale Torque Command (Torque Mode) [2] Analog Full Scale Torque Limit (P & V Modes) Mem Addr: 0129[h]

Range: 0 ~ 1000 Units: %
Default: 100 Control Modes:P/V/T

- In Position and Velocity Modes, this parameter sets the maximum torque limit based on the full scale input analog voltage (10V).
  Torque Limit Command = (Input Command V) (P1-41) / 10V
- In Torque Mode, this parameter sets the percent of rated torque which the motor will provide when 10V is applied to the analog input.
  Torque Command = (Input Command V) (P1-41) / 10V)
- In Torque Mode, this parameter sets the range of the Torque Command in % for a torque input range from 0V to 10V. (The same range applies in the negative direction from 0V to -10V, if there is no offset.) (P4-23 can be used to provide an offset, such that a non-zero input generates a zero torque command.)
  Torque Command = (Input V) (P1-41) / 10V
- The value of the analog torque command/limit can also be affected by P4-23.

P1-42 On Delay Time of Electromagnetic Brake Mem Addr: 012A[h]

Range: 0 ~ 1000 Units: ms
Default: 20 Control Modes: P/V/T

- This parameter sets the amount of time between when the servo drive is enabled and when the electromagnetic brake is released. (A digital output can be set for Electomagnetic Brake Control in parameters P2-18~2-22.)

P1-43 Off Delay Time of Electromagnetic Brake

Mem Addr: 012B[h]

Range: 0 ~ 1000 Units: ms

Default: 20 Control Modes: P/V/T

- This parameter sets the amount of time between when the servo drive is disabled and when the electromagnetic brake is engaged.

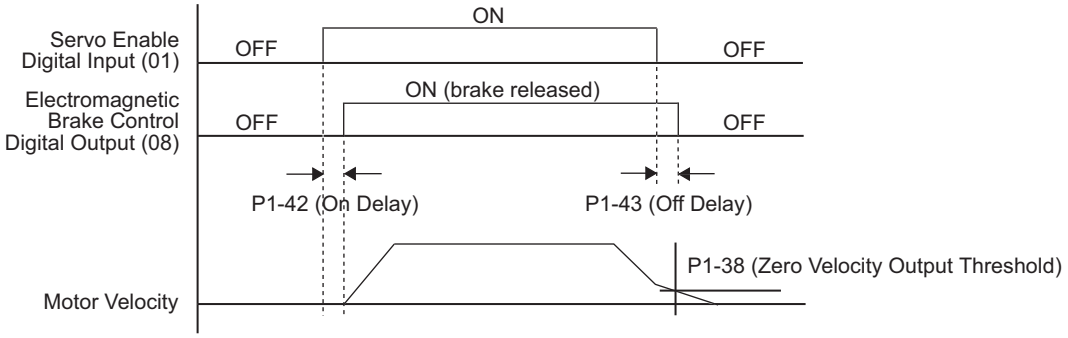

If the motor velocity is below the threshold set by P1-38 (Zero Velocity) when the servo is commanded off, the electromechanical brake will be engaged regardless of the amount of time set in this parameter.

If the motor velocity is above the threshold set by P1-38 (Zero Velocity) when the servo is commanded off and the off delay time has elapsed, the electromechanical brake will be engaged regardless of the current motor velocity.

P1-44 Electronic Gear Numerator 1

Mem Addr: 012C[h]

Range: 0 ~ 32,767 Units: counts

Default: 1 Control Modes: P

- This parameter sets the numerator of the Electronic Gear Ratio. P1-45 sets the denominator, and P2-60 through P2-62 set optional additional numerators.
- Refer to the “Electronic Gear Ratio” section of Control Modes Chapter 5 for more information regarding this function.
- Position Command = (Input Pulses) [(P1-44) / (P1-45)]

The electronic gear ratio setting MUST be within the following range:
1/50 < (P1-44) / (P1-45) < 200.

P1-45 Electronic Gear Denominator

Mem Addr: 012D[h]

Range: 0 ~ 32,767 Units: counts

Default: 1 Control Modes: P

- This parameter sets the denominator of the Electronic Gear Ratio. P1-44 and P2-60 through P2-62 set EGR numerators.
- Refer to the “Electronic Gear Ratio” section of Control Modes Chapter 5 for more information regarding this function.
- Position Command = (Input Pulses) [(P1-44) / (P1-45)]

The electronic gear ratio setting MUST be within the following range:
1/50 < (EGNumerator) / *(P1-45) < 200.*

P1-46 [2] Encoder Output Scaling Factor

Mem Addr: 012E[h]

Range: 1 ~ 125 (with B = 0)
10,020 ~ 12,500 (with B = 1)

Units: n/a

Default: 1

Control Modes: P/V/T

The range of the actual Scaling Factor is less than the full range of P1-46.

- This parameter sets the Pulse Number or the Pulse Dividing Ratio of the encoder outputs (OA, /OA, OB, /OB). It does not affect the output Z pulse (OZ, /OZ).

Settings:

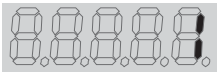

A: Scaling Factor (SF)
B: Scaling Factor Function Selection

Scaling Factor Settings (A):

1~125 or
10,020~12,500 — The function and range of the actual SF varies depending upon the setting of part B of this parameter.

Scaling Factor Function Selection Settings (B):

0 — Scaling Factor represents Pulse Dividing Ratio (PDR);
Range of SF: 1~125

- PDR = 2500 / SF

Examples:
- If P1-46 = 1, then PDR = 2500 / 1 = 2500
(The encoder will output 2500 pulses per motor revolution)
- If P1-46 = 2, then PDR = 2500 / 2 = 1250
(The encoder will output 1250 pulses per motor revolution)

1 — Scaling Factor directly represents the number of encoder output pulses for one motor revolution;
Range of SF: 20~2500 (limited to multiples of 20)

Examples:
- If P1-46 = 10020, the encoder will output 20 pulses per motor rev.
- If P1-46 = 10300, the encoder will output 300 pulses per motor rev.

P1-47 Homing Mode

Mem Addr: 012F[h]

Range: 0 ~ 1225 | Units: n/a

Default: 0 | Control Modes: P

• This parameter determines the servo motor's homing characteristics.

Settings:

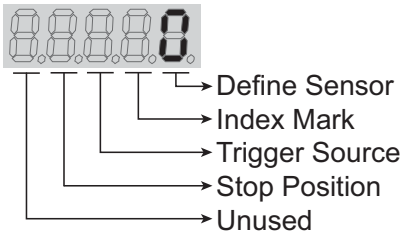

Define Sensor Settings for Home Position:

0	Move forward to overtravel limit switch used as home position indicator
1	Move reverse to overtravel limit switch used as home position indicator
2	Move forward to dedicated home position sensor
3	Move reverse to dedicated home position sensor
4	Z index mark as position sensor

Index Mark Settings:

0	Stop and return to the Z index mark
1	Go forward to the Z index mark
2	Position at home sensor position or Z

Trigger Source Settings:

0	Disable homing function
1	Start homing sequence at power-up
2	Start homing sequence by input terminal

Stop Position Settings:

0	After detecting home position, the motor will decelerate and return to home position
1	After detecting home position, the motor will decelerate and stop in the forward direction

• Example: P1-47 = 202: (refer to diagram in P1-48)
0: when Home Sensor DI is triggered, motor moves reverse off that position
2: motor starts homing when Start Home Move Trigger DI is enabled
0: stops on the next motor Z pulse (after reversing from the Home Sensor position)
2: homes in forward direction until the Home Sensor input is triggered

1) *P1-01 defines the rotation convention.*
2) *If 0 or 1 is set in the Define Sensor field, the limit sensor inputs must be defined (refer to P2-10~P2-17) and installed. If 2 or 3 is set in the Define Sensor field, a dedicated home sensor input must be defined and installed.*
3) *The overtravel sensors, when used as the home sensor, will return to overtravel protection after the homing function has completed.*

P1-48 Homing Velocity 1 - Fast Search Velocity

Mem Addr: 0130[h]

Range: 1 ~ 2000 | Units: rpm

Default: 1000 | Control Modes: P

- This parameter sets the initial (fast) Homing Velocity.

Servo homing may involve two homing velocities. When homing is triggered, the motor proceeds at a fast velocity until a home sensor is detected. The motor will then reverse direction at a slower speed until off of the home sensor, and will stop at the next Z-pulse.

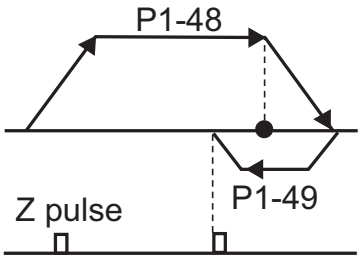

P1-47 = 0202
for this example

P1-49 Homing Velocity 2 - Creep Velocity

Mem Addr: 0131[h]

Range: 1 ~ 500 | Units: rpm

Default: 50 | Control Modes: P

- This parameter sets the secondary (slow) Homing Velocity.
- Refer to P1-48 for explanation of Homing Velocity parameters.

P1-50 Home Position Offset (revolutions)

Mem Addr: 0132[h]

Range: ± 30,000 | Units: revolutions

Default: 0 | Control Modes: P

- Refer to P1-51 for additional information regarding this parameter.

P1-51 Home Position Offset (counts)

Mem Addr: 0133[h]

Range: ± 10,000 | Units: counts

Default: 0 | Control Modes: P

- Set P1-50 and P1-51 to apply an offset from the homing point. These parameters are assigned as the current position at the completion of the homing routine. Determine the total number of offset pulses as follows:

$$\text{Home Pos}_{\text{offset}} = [(\text{P1-50}])\ (10{,}000)] + (\text{P1-51})$$

P1-52 Regenerative Resistor Value

Mem Addr: 0134[h]

Range: 10 ~ 750 Units: Ohms

Default: 40 (1kW and below; SVA-2040, -2100)
20 (above 1kW; SVA-2300) Control Modes: P/V/T

- This parameter represents the resistance of the applicable regenerative resistor. If using the servo drive's internal resistor, enter that resistance value here. If using an external resistor, enter the resistance value of that resistor in this parameter. Refer to the "Regenerative Resistor" section of Chapter 5 for information regarding allowable resistors.

P1-53 Regenerative Resistor Capacity

Mem Addr: 0135[h]

Range: 30 ~ 1000 Units: Watts

Default: 60 (1kW and below; SVA-2040, -2100)
120 (above 1kW; SVA-2300) Control Modes: P/V/T

- This parameter represents the capacity of the applicable regenerative resistor. If using the servo drive's internal resistor, enter that capacity value here. If using an external resistor, enter the capacity value of that resistor in this parameter. Refer to the "Regenerative Resistor" section of Chapter 5 for information regarding allowable resistors.

P1-54 In Position Window

Mem Addr: 0136[h]

Range: 0 ~ 10,000 Units: counts

Default: 99 Control Modes: P

- This parameter sets the width of the window in which the At Position digital output will be active. As an example, the At Position output will be active by default when the current motor position is within ±99 counts of the target position. The total window width is two times the set value. Refer to P2-19 ~ P2-22 to assign the digital output functions.

P1-55 Maximum Velocity Limit

Mem Addr: 0137[h]

Range: 0 ~ 5000 (SVL-2xxx low inertia motors)
0 ~ 3000 (SVM-2xxx medium inertia motors Units: rpm

Default: 0 ~ 3000 (SVL-2xxx low inertia motors)
0 ~ 2000 (SVM-2xxx medium inertia motors Control Modes: P/V/T

- This parameter sets the maximum motor velocity (velocity). The default setting is the rated velocity.

P1-56 Overload Output Warning Threshold

Mem Addr: 0138[h]

Range: 0 ~ 120 Units: %
Default: 120 Control Modes: P/V/T

- This parameter sets the level of the overload output warning threshold. When the system reaches threshold time level set by this parameter, it activates the Overload Warning DO signal (P2-18~P2-22 = 10; new setting in this firmware) and displays ALE23 on the LED Display. (ALE23 does not need to be cleared since it is only a warning, rather than a fault.)
- The setting of this parameter is a percentage of the continuous overload time required to initiate the Overload Fault ALE06. (The ALE06 Overload Fault times are set by P1-31 and are discussed in Chapter 1 of this manual.)
- $t_{OL\ warning} = (t_{OL\ fault}) \times$ (setting value of P1-56)
- Example for 100~750W systems operating at 200% OL, and P1-56 = 60%:
  For 100~750W systems, $t_{OL\ fault}$ @ 200% OL = 8s per Chapter 1 OL charts.
  $t_{OL\ warning} = (8s) \times (60\%) = 4.8s$
- This parameter varies by firmware version. For revision details, refer to "Appendix D: Latest *Sure*Servo Firmware Revisions".

Extended Parameters

P2-00 Position Loop Proportional Gain (KPP) Mem Addr: 0200[h]

Range: 0 ~ 1023 Units: rad/s

Default: 35 Control Modes: P

- This parameter adjusts the proportional gain of the position control loop, thereby affecting system stiffness and response. Higher gains reduce position error and increase responsiveness. However, if the setting is too high, it may generate oscillation or noise in the system.

In Easy Tune mode, this parameter is adjusted by the system.
For information regarding manual tuning of this parameter, refer to "Manual Tuning Mode Details" in the "Control Modes of Operation and Tuning" chapter.

P2-01 Position Loop Gain Boost Mem Addr: 0201[h]

Range: 10 ~ 500 Units: %

Default: 100 Control Modes: P

- This parameter sets the amount of KPP boost when the application condition is met. Use P2-27 to set the condition in which this boost will be applied to the system.

P2-02 Position Feed Forward Gain (KFF) Mem Addr: 0202[h]

Range: 10 ~ 20,000 Units: 0.0001

Default: 5000 Control Modes: P

- This parameter sets the Feed Forward Gain when executing the Position Control Command. It is used to reduce position following error and shorten settling time. Increase the gain to reduce the error. However, increasing it too much can lead to mechanical resonance and vibration.

For information regarding manual tuning of this parameter, refer to "Manual Tuning Mode Details" in the "Control Modes of Operation and Tuning" chapter.

P2-03 Smooth Constant of Position Feed Forward Gain Mem Addr: 0203[h]

Range: 2 ~ 100 Units: ms

Default: 5 Control Modes: P

- This parameter is used in conjunction with P2-02. P2-03 sets the length of time that the position error is applied to the velocity loop. Set this value as low as possible for desired system performance.

P2-04 Velocity Loop Proportional Gain (KVP) Mem Addr: 0204[h]

Range: 0 ~ 20,000 Units: rad/s

Default: 500 Control Modes: P/V

- This parameter sets the proportional gain for the velocity loop. Higher values make the velocity loop more responsive. However, setting it too high will cause excessive vibration or noise.

In Easy Tune Mode, the value of this parameter is automatically set by the system. For information regarding Manual Tuning of this parameter, refer to "Manual Tuning Mode Details" in the "Control Modes of Operation and Tuning" chapter.

P2-05 Velocity Loop Gain Boost Mem Addr: 0205[h]

Range: 10 ~ 500 Units: %

Default: 100 Control Modes: P/V

- This parameter sets the amount of KVP boost when the application condition is met. See P2-27 to set the condition in which this boost will be applied to the system.

P2-06 Velocity Loop Integral Compensation (KVI) Mem Addr: 0206[h]

Range: 0 ~ 4095 Units: n/a

Default: 100 Control Modes: P/V

- This parameter sets the integral time of the velocity loop. When the value of the velocity integral compensation is increased, it can improve the velocity response ability and decrease the velocity control deviation. However, if the setting value is too high, it may generate oscillation or noise.

In the Easy Tune Mode, the value of this parameter is automatically set by the system. For information regarding Manual Tuning of this parameter, refer to "Manual Tuning Mode Details" in the "Control Modes of Operation and Tuning" chapter.

P2-07 Velocity Feed Forward Gain (KVF) Mem Addr: 0207[h]

Range: 0 ~ 20,000 Units: 0.0001

Default: 0 Control Modes: V

- This parameter sets the Feed Forward Gain when executing the velocity control command. When using the velocity smooth command, increased gain can improve velocity track deviation. When not using the velocity smooth command, decreased gain can improve the resonance condition of the mechanical system.

P2-08 [4] Factory Defaults and Password

Mem Addr: 0208[h]

Range: 0 ~ 65,535 | Units: n/a
Default: 0 | Control Modes: P/V/T

- This parameter can be used to restore factory default parameter settings, and to establish a password.

Settings:

Restore Default Settings:

10	Reset system to factory default parameters.

Restoring system defaults will reset any active password.

Password Settings:

10,000 ~ 65,535	Password which locks the current configuration in the drive. The parameters then cannot be changed unless the correct password is entered first.

- To apply a password:
  Enter a five digit password in the range from 10,000 to 65,535 into P2-08. Then enter the same password again to confirm it.
- To change parameters when a password is active:
  Enter the correct password to unlock the parameters, then change the parameters.
- To disable password security:
  Enter the correct password, and then zero (0) twice in succession.

P2-09 Debounce Filter (Contact Suppression)

Mem Addr: 0209[h]

Range: 0 ~ 20 | Units: 2ms
Default: 2 | Control Modes: P/V/T

- This parameter sets a low-pass filter on the general purpose inputs, which helps to prevent false input triggers due to electrical noise and contact bounce. Setting this value too high may result in missed intended triggers.

P2-10 [6] Digital Input Terminal 1 (DI1)

Mem Addr: 020A[h]

Range: 0 ~ 145 | Units: n/a
Default: 101 | Control Modes: P/V/T

- P2-10 ~ P2-17 determine the functions and active states of DI1 ~ DI7, respectively.
- P2-10 ~ P2-17 vary by firmware version. For revision details, refer to "Appendix D: Latest *Sure*Servo Firmware Revisions".

Settings:

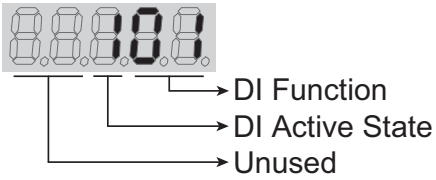

DI Function Settings (P2-10 ~ P2-17):

00 Input Disabled
01 Servo Enable
02 Alarm Reset (will not reset all faults; see “Clearing Faults” in Chapter 7)
03 Gain Boost Switch
04 Clear Command (see P2-50)
05 Low Velocity Clamp (see P1-38)
06 Command Input Polarity
Inverts the polarity of the AI Input Command Voltage
by multiplying by -1; i.e. +V bcomes -V and vice versa
07 Position Command Pause (Internal Indexer only)
08 Command Trigger (available in Pr mode only)
09 Torque Limit Enable (bi-directional)
(see DI settings 25, 26; P1-02, P1-12, P2-64)
10 Velocity Limit Enable (see P1-02, P1-09)
11 Position Command Select 0 (PCS0)
12 Position Command Select 1 (PCS1)
13 Position Command Select 2 (PCS2)
14 Velocity Command Select 0 (VCS0)
15 Velocity Command Select 1 (VCS1)
16 Torque Command Select 0 (TCS0)
17 Torque Command Select 1 (TCS1)
18 Position/Velocity Mode Select (0=Vel., 1=Pos.) (dual control)
19 Velocity/Torque Mode Select (0=Vel., 1=Torq.) (dual control)
20 Position/Torque Mode Select (0=Torq., 1=Pos.) (dual control)
21 Fault Stop (Normally Closed)
22 Reverse Inhibit (Overtravel - Normally Closed)
23 Forward Inhibit (Overtravel - Normally Closed)
24 Home Sensor
25 Torque Limit Enable Reverse (reverse direction only)
(see DI settings 09, 26; P1-02, P1-12, P2-64)
26 Torque Limit Enable Forward (forward direction only)
(see DI settings 09, 25; P1-02, P1-13, P2-64)
27 Start Home Move Trigger
28 Index Mode Select 0 (IMS0)
29 Index Mode Select 1 (IMS1)
30 Index Mode Select 2 (IMS2)
31 Index Mode Select 3 (IMS3)
32 Index Mode Select 4 (IMS4)
33 Index Mode Control 0 (IMC0)
34 Index Mode Control 1 (IMC1)
35 Index Mode - Manual Continuous Operation
36 Index Mode - Manual Single Step Operation
37 Jog Forward
38 Jog Reverse
39 Step Reverse (Pr mode only)
40 Step Forward (Pr mode only)
41 Return to Index 1 (Auto Index Mode only); return motor to 1st position
42 Auto Position mode
43 Electronic Gear Numerator Select 0 (EGNS0) (see P2-60 ~ P2-62)
44 Electronic Gear Numerator Select 1 (EGNS1) (see P2-60 ~ P2-62)
45 Inhibit Pulse Command - Terminal
Causes external pulse input command to be ignored.

1) When P2-10 ~ P2-17 are set to zero (0), the corresponding inputs are disabled.
2) Settings 11~17 are for single control modes; 18~20 are for dual control modes.

DI Active State Settings: (P2-10 ~ P2-17):

0 Normally Closed (use N.C. contact)
1 Normally Open (use N.O. contact)

Examples (for P2-10 ~ P2-17):

- Setting 101 configures this input for Servo Enable command, and requires a normally open contact to be connected to it.
- Setting 21 configures this input for Fault Stop circuit monitoring and requires a normally closed contact to be wired to it.

P2-11 [6] Digital Input Terminal 2 (DI2) Mem Addr: 020B[h]

Range: 0 ~ 145 Units: n/a
Default: 104 Control Modes: P/V/T

- Refer to P2-10 for explanation of DI Terminal parameters P2-10 through P2-17.

P2-12 [6] Digital Input Terminal 3 (DI3) Mem Addr: 020C[h]

Range: 0 ~ 145 Units: n/a
Default: 116 Control Modes: P/V/T

- Refer to P2-10 for explanation of DI Terminal parameters P2-10 through P2-17.

P2-13 [6] Digital Input Terminal 4 (DI4) Mem Addr: 020D[h]

Range: 0 ~ 145 Units: n/a
Default: 117 Control Modes: P/V/T

- Refer to P2-10 for explanation of DI Terminal parameters P2-10 through P2-17.

P2-14 [6] Digital Input Terminal 5 (DI5) Mem Addr: 020E[h]

Range: 0 ~ 145 Units: n/a
Default: 102 Control Modes: P/V/T

- Refer to P2-10 for explanation of DI Terminal parameters P2-10 through P2-17.

P2-15 [6] Digital Input Terminal 6 (DI6) Mem Addr: 020F[h]

Range: 0 ~ 145 Units: n/a
Default: 22 Control Modes: P/V/T

- Refer to P2-10 for explanation of DI Terminal parameters P2-10 through P2-17.

P2-16 [6] Digital Input Terminal 7 (DI7) Mem Addr: 0210[h]

Range: 0 ~ 145 Units: n/a
Default: 23 Control Modes: P/V/T

- Refer to P2-10 for explanation of DI Terminal parameters P2-10 through P2-17.

P2-17 [6] Digital Input Terminal 8 (DI8) Mem Addr: 0211[h]

Range: 0 ~ 145 Units: n/a
Default: 21 Control Modes: P/V/T

- Refer to P2-10 for explanation of DI Terminal parameters P2-10 through P2-17.

P2-18 [6] Digital Output Terminal 1 (DO1) Mem Addr: 0212[h]

Range: 0 ~ 109 Units: n/a
Default: 101 Control Modes: P/V/T

- If P2-44 is set to its default value of zero (0), parameters P2-18 ~ P2-22 determine the functions and active states of DO1 ~ DO5, respectively.
- P2-18 ~ P2-22 vary by firmware version. For revision details, refer to "Appendix D: Latest *Sure*Servo Firmware Revisions".

Settings:

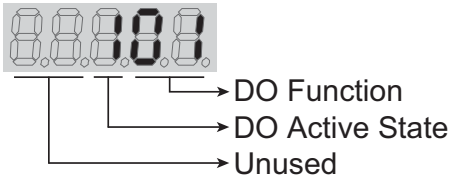

DO Function Settings (P2-18 ~ P2-22):

00	Output Disabled
01	Servo Ready (no faults)
02	Servo On (enabled)
03	At Zero Velocity (see P1-38)
04	At Velocity Reached
05	At Position
06	At Torque Limit
07	Active Fault
08	Electromagnetic Brake Control
09	Homing Completed
10	At Overload Output Warning Threshold

DO Active State Settings: (P2-18 ~ P2-22):

0	Acts like a Normally Closed contact
1	Acts like a Normally Open contact

Examples for P2-18 ~ P2-22:

- Setting 101 configures this output as a Servo Ready indicator, and the output functions like a normally open contact.

Examples for P2-18 ~ P2-22 (continued):

- Setting 005 configures this output as an At Position Indicator, and the output functions like a normally closed contact.

1) P2-18 ~ P2-22 are effective only if P2-44 is set to zero (0).
2) When P2-18 ~ P2-22 DO Function digits are set to zero (0), the corresponding outputs are disabled.

P2-19 [6] Digital Output Terminal 2 (DO2) Mem Addr: 0213[h]

Range: 0 ~ 109 Units: n/a
Default: 103 Control Modes: P/V/T

- Refer to P2-18 for explanation of DO Terminal parameters P2-19 through P2-22.

P2-20 [6] Digital Output Terminal 3 (DO3) Mem Addr: 0214[h]

Range: 0 ~ 109 Units: n/a
Default: 109 Control Modes: P/V/T

- Refer to P2-18 for explanation of DO Terminal parameters P2-19 through P2-22.

P2-21 [6] Digital Ouput Terminal 4 (DO4) Mem Addr: 0215[h]

Range: 0 ~ 109 Units: n/a
Default: 105 Control Modes: P/V/T

- Refer to P2-18 for explanation of DO Terminal parameters P2-19 through P2-22.

P2-22 [6] Digital Ouput Terminal 5 (DO5) Mem Addr: 0216[h]

Range: 0 ~ 109 Units: n/a
Default: 7 Control Modes: P/V/T

- Refer to P2-18 for explanation of DO Terminal parameters P2-19 through P2-22.

P2-23 **Notch Filter** (Resonance Suppression) Mem Addr: 0217[h]

Range: 50 ~ 1000 Units: Hz
Default: 1000 Control Modes: P/V/T

- This parameter is used to reduce mechanical system vibration. Set the value to match the mechanical resonance (vibration) frequency.
- Resonance is a condition in a system that happens at certain frequencies, and it is excited with a signal such as a velocity. It is possible to change the velocity (or frequency) to avoid resonance. P2-23 through P2-26 can also be used to suppress resonance.

If Notch Filter Attenuation (P2-24) is set to 0, then this Notch Filter (P2-23) is disabled.

P2-24 **Notch Filter Attenuation** (Resonance Suppression) Mem Addr: 0217[h]

Range: 0 ~ 32 (0 = disable) Unit: dB
Default: 0 Control Modes: P/V/T

- This parameter sets the magnitude of the resonance suppression set by P2-23. Set P2-24 as low as possible without loss of system control at the resonance frequency (P2-23). (See P2-23 for explanation of resonance.)

P2-25 Low-pass Filter (Resonance Suppression) Mem Addr:021A[h]

Range: 0 ~ 1000 (0 = disable) Units: ms
Default: 2 (400W and below; SVA-2040)
5 (750W and above; SVA-2100, -2300) Control Modes: P/V/T

- This parameter is used to set the Low-pass Filter time constant of resonance suppression, in order to suppress or eliminate noise or resonance. (See P2-23 for explanation of resonance.)
- Increasing this parameter will reduce noise or resonance. However, setting the parameter too high will lead to the instability of the velocity loop and overshoot of the machinery system.
- The recommended setting value is as follows:
  P2-25 ≤ 1000 ÷ [(4) (Velocity Loop Bandwidth)]
- If the value is set to zero, the function is disabled.

P2-26 External Anti-interference Gain (Resonance Suppress) Mem Addr: 021A[h]

Range: 0 ~ 30000 (0 = disable) Units: n/a
Default: 0 Control Modes: P/V/T

- This parameter filters out resonance and reduces overshoot in the velocity loop feedback path. (See P2-23 for explanation of resonance.)
- It is set automatically in Easy Tune and Fixed Auto Tune (PDFF) modes. It is not recommended for use in Manual Mode unless its value is determined by the adaptive fixed Auto-Tune PDFF mode (P2-32 = 5). Once the value is determined in mode 5, it can be left when the tuning mode is set to Manual (P2-32 = 0).
- If the value is set to zero, the function is disabled.

No manual adjustment of this parameter is usually neccessary. Changing this value may result in exessive overshoot and an unstable system.

P2-27 Gain Boost Control

Mem Addr: 021B[h]

Range: 0 ~ 4 Units: n/a

Default: 0 Control Modes: P/V

- This parameter sets how or when Gain Boost is applied.

Settings:

0	Gain Boost is *disabled*.
1	Gain Boost controlled by *input terminal*.
2	In Position Mode (Pt or Pr), Gain Boost becomes active when *position deviation* is outside threshold set by P2-29.
3	Gain Boost becomes active when *Position Command frequency* is higher than the setting value of P2-29.
4	Gain Boost becomes active when servo *motor rotation velocity* is higher than the setting value of P2-29.

Gain Boost is used to adjust the position loop gain, the velocity loop gain, or both gains when the control condition determined by this parameter is met. The *amount* of boost applied is set by P2-01 (position loop) and by P2-05 (velocity loop).

This type of control is used primarily when the motor load changes significantly during normal operation. By applying Gain Boost, the system response and tuning can be altered on-the-fly to produce desirable performance.

P2-28 Gain Boost Switching Time

Mem Addr: 021C[h]

Range: 0 ~ 1000 (0 = disable) Unit: 10 ms

Default: 10 Control Modes: P/V

- This parameter is used to set the amount of time it takes for the gain boost to be applied. If the value is zero (disabled), then when the Gain Boost Command calls for boost, it will be applied instantaneously. By default, it will take 10 milliseconds.

P2-29 Gain Boost Switching Condition

Mem Addr: 021D[h]

Range: 0 ~ 30,000 (0 = disable) Unit: count, kpps, rpm

Default: 10,000 Control Modes: P/V

- This parameter sets the value of the gain switching condition (pulse error, kpps, rpm) selected in P2-27. The setting value will vary depending on the gain switching condition.

P2-30 [4] Auxiliary Function

Mem Addr: 021E[h]

Range: 0 ~ 5 Unit: n/a

Default: 0 Control Modes: P/V/T

Refer to chapters 4 and 6 for information and usage of this parameter in Teach Mode and system commissioning.

Settings:

0	Normal operation of Servo Enable and both overtravel limits
1	Force Servo Enable and ignore both overtravel limitsl
2	Ignore Reverse Inhibit (overtravel limit)
3	Ignore Forward Inhibit (overtravel limit)
4	Set Teach Position Mode
5	Disable flash memory writes. This mode will allow parameters to be changed normally. However, they will NOT be saved to flash memory and will be lost when power is removed. When control power is lost and then restored, this parameter will be set to default 0 and must be set back to 5 to re-enable this mode.

WARNING: This parameter will disable machine protection features, such as Servo Enable and Overtravel limits. Use this parameter with extreme caution.

P2-31 Auto and Easy Tuning Mode Response Level

Mem Addr: 021F[h]

Range: 0 ~ FF [h] Unit: n/a

Default: 44[h] Control Modes: P/V/T

Settings:

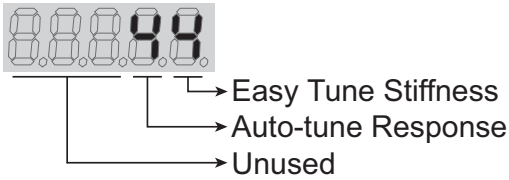

Easy Tune Stiffness:

0 ~ F	Where 0 equals the lowest stiffness setting, and F equals the highest stiffness setting (16 total settings possible). The higher the setting, the stiffer the control loop.

Auto Tune Response:

0 ~ F	Where 0 equals the slowest response setting, and F equals the fastest response setting (16 total settings possible). The higher the setting, the faster the autotune feature will respond to changes.

- Refer to parameter P2-32 for enabling and disabling this feature.

P2-32 [2] Tuning Mode

Mem Addr: 0220[h]

Range: 0 ~ 5 | Unit: n/a

Default: 0 | Control Modes: P/V/T

- This parameter varies by firmware version. For revision details, refer to "Appendix D: Latest *Sure*Servo Firmware Revisions".

Settings:

0	Manual Tuning Mode
1	Easy-Tune Mode
2	PI Adaptive Auto-Tune Mode
3	PI Fixed Auto-Tune Mode (ratio is fixed; response levels are adjusted)
4	PDFF Adaptive Auto-Tune Mode
5	PDFF Fixed Auto-Tune Mode (ratio fixed; response levels are adjusted)

- PI = Proportional - Integral control
- PDFF = Pseudo-Derivative Feedback and Feedforward control

Explanation of Auto-tuning:

1. When switching from mode 2 or 4 to mode 3 or 5 (fixed ratio modes), the system will save the measured load inertia value automatically to P1-37 and then set the other corresponding auto tune parameters accordingly.
2. When switching from mode 2 or 4 to mode 0 (manual mode), load measurements will cease and all parameters will be set to system defaults.
3. When switching from mode 0 to mode 3 or 5 (fixed ratio modes), P1-37 should be set to the proper mismatch ratio.
4. When switching from mode 3 to mode 0 (manual mode), P2-00, P2-04 and P2-06 will retain the values determined by the auto-tune mode.
5. When switching from mode 5 to mode 0 (manual mode), the setting value of P2-00, P2-04, P2-06, P2-25 and P2-26 will retain the values determined by the auto-tune mode.

P2-33 Reserved

P2-34 Overspeed Fault Threshold

Mem Addr: 0222[h]

Range: 5000 | Units: rpm

Default: 1 ~ 5000 | Control Modes: V

- This parameter is used to set the over velocity threshold that is used to determine the over velocity drive fault condition.

P2-35 Position Deviation Fault Window

Mem Addr: 0223[h]

Range: 1 ~ 30,000 Units: pulse

Default: 30,000 Control Modes: P

- This parameter is used to set the size of the position deviation window that is used to determine the excessive deviation drive fault condition. Refer to P2-63 for scaling details.

P2-36 Position 1 Velocity

Mem Addr: 0224[h]

Range: 1 ~ 5,000 Units: rpm

Default: 1000 Control Modes: P

- This is the command velocity that is used to move to Position 1. Refer to P1-15 and P1-16 to set the Position 1 command position (absolute mode) or command distance (incremental mode).

P2-37 Position 2 Velocity

Mem Addr: 0225[h]

Range: 1 ~ 5,000 Units: rpm

Default: 1000 Control Modes: P

- This is the command velocity that is used to move to Position 2. Refer to P1-17 and P1-18 to set the Position 2 command position (absolute mode) or command distance (incremental mode).

P2-38 Position 3 Velocity

Mem Addr: 0226[h]

Range: 1 ~ 5,000 Units: rpm

Default: 1000 Control Modes: P

- This is the command velocity that is used to move to Position 3. Refer to P1-19 and P1-20 to set the Position 3 command position (absolute mode) or command distance (incremental mode).

P2-39 Position 4 Velocity

Mem Addr: 0227[h]

Range: 1 ~ 5,000 Units: rpm

Default: 1000 Control Modes: P

- This is the command velocity that is used to move to Position 4. Refer to P1-21 and P1-22 to set the Position 4 command position (absolute mode) or command distance (incremental mode).

P2-40 Position 5 Velocity

Mem Addr: 0228[h]

Range: 1 ~ 5,000 Units: rpm
Default: 1000 Control Modes: P

- This is the command velocity that is used to move to Position 5. Refer to P1-23 and P1-24 to set the Position 5 command position (absolute mode) or command distance (incremental mode).

P2-41 Position 6 Velocity

Mem Addr: 0229[h]

Range: 1 ~ 5,000 Units: rpm
Default: 1000 Control Modes: P

- This is the command velocity that is used to move to Position 6. Refer to P1-25 and P1-26 to set the Position 6 command position (absolute mode) or command distance (incremental mode).

P2-42 Position 7 Velocity

Mem Addr: 022A[h]

Range: 1 ~ 5,000 Units: rpm
Default: 1000 Control Modes: P

- This is the command velocity that is used to move to Position 7. Refer to P1-27 and P1-28 to set the Position 7 command position (absolute mode) or command distance (incremental mode).

P2-43 Position 8 Velocity

Mem Addr: 022B[h]

Range: 1 ~ 5,000 Units: rpm
Default: 1000 Control Modes: P

- This is the command velocity that is used to move to Position 8. Refer to P1-29 and P1-30 to set the Position 8 command position (absolute mode) or command distance (incremental mode).

P2-44 Digital Output Mode

Mem Addr: 022C[h]

Range: 0 ~ 1 Units: n/a
Default: 0 Control Modes: P

- This parameter determines whether the digital outputs indicate Pr Auto and Index Modes status, or whether they function according to parameters P2-18 through P2-22.

Settings:

0	All five outputs function as defined in P2-18 ~ P2-22.
1	Pr Auto and Index Modes output. Outputs indicate current status during indexing operations. (Refer to Chapter 5, “Control Modes of Operation and Tuning”, for explanation of status codes.)

P2-45 Index Mode Output Signal Delay Time

Mem Addr: 022D[h]

Range: 0 ~ 250 Units: 4 ms
Default: 1 Control Modes: P

- This parameter sets the ON time delay after the index move is complete (when Index Mode is enabled).

Note: Used only when P2-44 is set to 1.

Refer to P1-33 and to the "Position Control Modes" section of chapter 5 for more details.

P2-46 Index Mode Stations

Mem Addr: 022E[h]

Range: 2 ~ 32 Units: n/a
Default: 6 Control Modes: P

- This parameter sets the number of positions used during index mode operation.

Note: Used only when P1-33 is set to 2, 3, or 4.

Refer to P1-33 and to the "Position Control Modes" section of chapter 5 for more details.

P2-47 Position Deviation Clear Delay Time

Mem Addr: 022F[h]

Range: 0 ~ 250 Units: 20 ms
Default: 0 Control Modes: P

- This parameter sets the delay time after the deviation subsides during index mode operation.

Note: Used only when P1-33 is set to 2, 3, or 4.

P2-48 Backlash Compensation (Index Mode)

Mem Addr: 0230[h]

Range: 0 ~ 10,312 (0~312 counts + direction) Units: counts
Default: 0 Control Modes: Pr

- This parameter sets the amount of position compensation (in counts) used in Index Mode.
- Used only when P1-33 is set to 2, 3, or 4.

There is a slight amount of backlash inherent in all mechanical systems. Set the magnitude of the compensation, and the direction in which it should be applied.

- Note: The electronic gear ratio has to be considered when setting the magnitude:
  Compensation Counts = (P2-48) (Electronic Gear Ratio)

Settings:

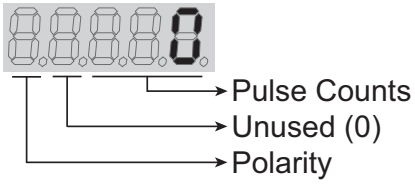

Pulse Counts Settings:

0~312	Number of pulse counts

Polarity Settings:

0	Forward compensation
1	Reverse compensation

System must be re-homed after making any changes to this parameter.

P2-49 Jitter Suppression

Mem Addr: 0231[h]

Range: 0 ~ 19 (enable/disable + 0~9) Units: n/a
Default: 0 Control Modes: P/V

- This parameter adjusts the cut-off frequency of the velocity feedback into the velocity control loop.

  It is typically used in applications where low speed performance is needed but fast response is not required. As an example, when the motor stops at a position, the servo control loops are going to force the motor to stay where it is to within +/- 1 encoder count. In some cases (based on tuning), a rapid swing between +/- 1 pulse may cause an intermittent or mechanical noise. Use the parameter to suppress this type of noise problem.

  When using this parameter, set the value to the smallest possible value (highest frequency) for desired performance. The higher the value (lower frequency cutoff) the worse the "at position" accuracy will be (not guaranteed to be +/- 1 encoder count).

Settings:

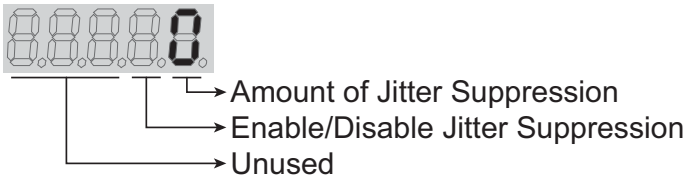

Jitter Suppression Settings:

0	600Hz cutoff frequency
1	500Hz cutoff frequency
2	400Hz cutoff frequency
3	350Hz cutoff frequency
4	300Hz cutoff frequency
5	250Hz cutoff frequency
6	200Hz cutoff frequency
7	150Hz cutoff frequency
8	100Hz cutoff frequency
9	80Hz cutoff frequency

Enable/Disable Settings:

0	Disable Jitter Suppression
1	Enable Jitter Suppression

This cut-off frequency must be higher than the velocity loop bandwidth (P2-04) in order to assure loop stability.

P2-50 Clear Position Mode

Mem Addr: 0232[h]

Range: 0 ~ 2 | Units: n/a
Default: 0 | Control Modes: P

- This parameter is used when a digital input is configured as a Clear Pulse function (DIx set to 4). (Refer to P2-10 ~ P2-17 to assign the DI functions.)

Settings:

0 Triggering this input will clear any remaining active command pulses from memory (Pt and Pr modes only).

1 Triggering this input will clear the current system position in memory to zero (Pt and Pr modes only).

2 Triggering this input will clear any remaining command pulses in memory and will execute a stop command (Pr mode only).

P2-51 Servo Enable Command

Mem Addr: 0233[h]

Range: 0 ~ 1 | Units: n/a
Default: 0 | Control Modes: P/V/T

- This parameter determines how the servo system is enabled.

Settings:

0 Servo Enable is controlled by the assigned digital input. (Refer to P2-10 ~ P2-17 to assign the DI functions.)

1 Servo Enable is activated when control power is applied the servo drive regardless of the state of the digital input.

When set to 1, if faults exist when power is applied, the servo will enable after the faults are cleared.

P2-52 Dwell Time 1 - Auto Position Mode

Mem Addr: 0234[h]

Range: 0.00 ~ 120.00 | Units: s
Default: 0 | Control Modes: P

- This parameter sets the dwell time at Index Position 1 during Auto Position operation. If this parameter is set to zero, Auto Position Mode will not index to this Index Position. (Refer to P1-33 and Chapter 5, “Control Modes of Operation and Tuning”, for more information regarding Auto Position Mode.)

P2-53 Dwell Time 2 - Auto Position Mode

Mem Addr: 0235[h]

Range: 0.00 ~ 120.00 | Units: s
Default: 0 | Control Modes: P

- This parameter sets the dwell time at Index Position 2 during Auto Position operation. If this parameter is set to zero, Auto Position Mode will not index to this Index Position. (Refer to P1-33 and Chapter 5, “Control Modes of Operation and Tuning”, for more information regarding Auto Position Mode.)

P2-54 Dwell Time 3 - Auto Position Mode

Mem Addr: 0236[h]

Range: 0.00 ~ 120.00 Units: s
Default: 0 Control Modes: P

- This parameter sets the dwell time at Index Position 3 during Auto Position operation. If this parameter is set to zero, Auto Position Mode will not index to this Index Position. (Refer to P1-33 and Chapter 5, “Control Modes of Operation and Tuning”, for more information regarding Auto Position Mode.)

P2-55 Dwell Time 4 - Auto Position Mode

Mem Addr: 0237[h]

Range: 0.00 ~ 120.00 Units: s
Default: 0 Control Modes: P

- This parameter sets the dwell time at Index Position 4 during Auto Position operation. If this parameter is set to zero, Auto Position Mode will not index to this Index Position. (Refer to P1-33 and Chapter 5, “Control Modes of Operation and Tuning”, for more information regarding Auto Position Mode.)

P2-56 Dwell Time 5 - Auto Position Mode

Mem Addr: 0238[h]

Range: 0.00 ~ 120.00 Units: s
Default: 0 Control Modes: P

- This parameter sets the dwell time at Index Position 5 during Auto Position operation. If this parameter is set to zero, Auto Position Mode will not index to this Index Position. (Refer to P1-33 and Chapter 5, “Control Modes of Operation and Tuning”, for more information regarding Auto Position Mode.)

P2-57 Dwell Time 6 - Auto Position Mode

Mem Addr: 0239[h]

Range: 0.00 ~ 120.00 Units: s
Default: 0 Control Modes: P

- This parameter sets the dwell time at Index Position 6 during Auto Position operation. If this parameter is set to zero, Auto Position Mode will not index to this Index Position. (Refer to P1-33 and Chapter 5, “Control Modes of Operation and Tuning”, for more information regarding Auto Position Mode.)

P2-58 Dwell Time 7 - Auto Position Mode

Mem Addr: 023A[h]

Range: 0.00 ~ 120.00 Units: s
Default: 0 Control Modes: P

- This parameter sets the dwell time at Index Position 7 during Auto Position operation. If this parameter is set to zero, Auto Position Mode will not index to this Index Position. (Refer to P1-33 and Chapter 5, “Control Modes of Operation and Tuning”, for more information regarding Auto Position Mode.)

P2-59 Dwell Time 8 - Auto Position Mode

Mem Addr: 023B[h]

Range: 0.00 ~ 120.00 Units: s

Default: 0 Control Modes: P

- This parameter sets the dwell time at Index Position 8 during Auto Position operation. If this parameter is set to zero, Auto Position Mode will not index to this Index Position. (Refer to P1-33 and Chapter 5, "Control Modes of Operation and Tuning", for more information regarding Auto Position Mode.)

P2-60 Electronic Gear Numerator 2

Mem Addr: 023C[h]

Range: 1 ~ 32,767 Units: pulse

Default: 1 Control Modes: P

- This parameter sets a numerator of the Electronic Gear Ratio. P1-45 sets the denominator, and P1-44, P2-60, P2-61, P2-62 set selectable numerators.

Select which of the four numerators will be active by using the Electronic Gear Numerator Select digital inputs. For information regarding the setting of the DI functions, refer to P2-10 ~ P2-17 and to the "Electronic Gear Ratio" section of Chapter 5, "Control Modes of Operation and Tuning".

Electronic Gear Numerator Selection		
Digital Inputs		EGN Selected
EGN Select 1	EGN Select 0	
0	0	P1-44
0	1	P2-60
1	0	P2-61
1	1	P2-62

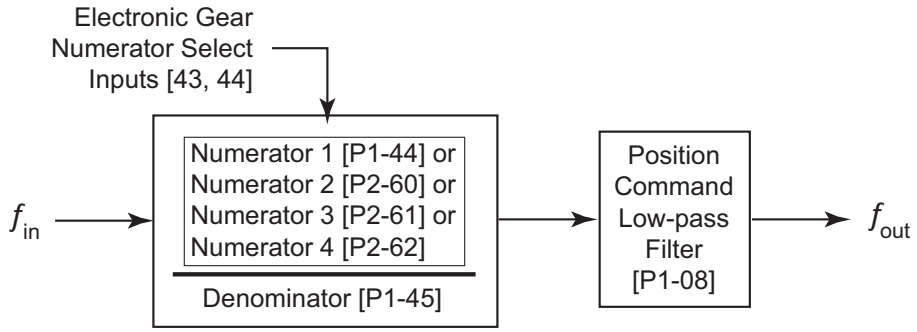

P2-60 (continued)

The electronic gear ratio setting MUST be within the following range:
1/50 < (Electronic Gear Numerator) / (Electronic Gear Denominator) < 200.

When electronic gearing is used, and no Electronic Gear Numerator Select DI have been configured, the default gear ratio is determined by P1-44 and P-145.

P2-61 Electronic Gear Numerator 3

Mem Addr: 023D[h]

Range: 1 ~ 32,767 Units: pulse

Default: 1 Control Modes: P

- Refer to P2-60 for explanation of selectable Electronic Gear Numerator parameters P2-60 ~ P2-62.

The electronic gear ratio setting MUST be within the following range:
1/50 < (Electronic Gear Numerator) / (Electronic Gear Denominator) < 200.

When electronic gearing is used, and no Electronic Gear Numerator Select DI have been configured, the default gear ratio is determined by P1-44 and P-145.

P2-62 Electronic Gear Numerator 4

Mem Addr: 023E[h]

Range: 1 ~ 32,767 Units: pulse

Default: 1 Control Modes: P

- Refer to P2-60 for explanation of selectable Electronic Gear Numerator parameters P2-60 ~ P2-62.

The electronic gear ratio setting MUST be within the following range:
1/50 < (Electronic Gear Numerator) / (Electronic Gear Denominator) < 200.

When electronic gearing is used, and no Electronic Gear Numerator Select DI have been configured, the default gear ratio is determined by P1-44 and P-145.

P2-63 Velocity and Position Deviation Scaling Factor

Mem Addr: 023F[h]

Range: 0 ~ 11 | Units: times

Default: 0 | Control Modes: P/V

- This parameter sets the scaling factor for both the Position Deviation Fault Window (P2-35) and internal Velocity (P1-09 ~ P1-11) commands.

Settings:

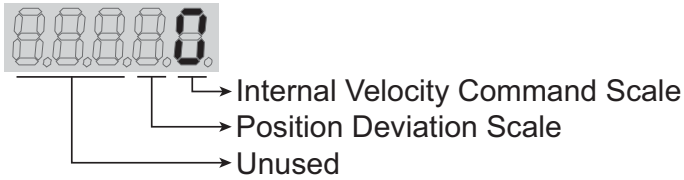

Internal Velocity Command Scale Settings:

- This scaling applies to internal velocity commands only, and does NOT apply to velocity limit thresholds:

0	No scaling. The internal Velocity Command values (P1-09 ~ P1-11) are used as raw values.
1	The internal Velocity Command values (P1-09 ~ P1-11) are multiplied by 0.1 before being used by the system. Example: a P1-09 velocity of 1234 rpm is used by the system as 123.4 rpm.

Position Deviation Scale Settings:

0	No scaling. The Position Deviation value (P2-35) is used as a raw value.
1	The Position Deviation value (P2-35) is multiplied by 100 before being used by the system. Example: a P2-35 Position Deviation Fault Window of 100 counts is used by the system as 10,000 encoder counts. The Position Deviation fault monitor output will not become active until position error is equal to or greater than 10,000 encoder counts. (Refer to P2-18 ~ P2-22 for explanation of DO settings, and to P0-01 for list of Drive Fault Codes.)

P2-64 Advanced Torque Limit

Mem Addr: 0240[h]

Range: 0 ~ 3 | Units: n/a
Default: 0 | Control Modes: P/V

- This parameter allows you to use a variable analog input Torque Limit whose range is clamped by one or more separate fixed Torque Limits. The drive applies whichever applicable limit is more restrictive; variable or fixed.
- The Torque Limit function must be enabled by P1-02 = 1x, or by a DI with setting P2-10~P2-17 = 9, 25, or 26. Different clamping characteristics are available depending upon which enabling method you use. Use only one of the methods to enable the Torque Limit function.
- This parameter varies by firmware version. For revision details, refer to "Appendix D: Latest *Sure*Servo Firmware Revisions".

» NTL = Negative Torque Limit

» PTL = Positive Torque Limit

» T_REF = Analog Torque Input
= CN1 #18

» TL_N = Applied Negative Torque Limit

» TL_P = Applied Positive Torque Limit

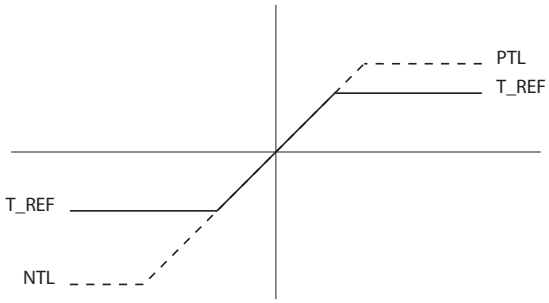

Settings:

0 Disable Advanced Torque Limit function

1 Bi-directional Torque Limit
(Torque Limit applies in both forward and reverse directions)

If |T_REF| < PTL	TL_P = T_REF
If |T_REF| > PTL	TL_P = PTL
If |T_REF| < |NTL|	TL_N = T_REF
If |T_REF| >|NTL|	TL_N = NTL

Torque Limit Clamp Selection for P2-64 = 1

Torque Enable Method	Motor Direction	Torque Comand Select DI		Active Torque Clamp
		TCS1 (17)	TCS0 (16)	
P1-02 = 1x or DI: P2-10~P2-17 = 09	forward (+) or reverse (-)	0	0	Pt, V Modes: T_REF AI Pr, Vz Modes: 0 torque
		0	1	NTL = PTL from P1-12
		1	0	NTL = PTL from P1-13
		1	1	NTL = PTL from P1-14
DI: P2-10~P2-17 = 25	forward (+)	N/A		NTL = PTL from T_REF
	reverse (-)			NTL = PTL from P1-12
DI: P2-10~P2-17 = 26	forward (+)	N/A		NTL = PTL from P1-13
	reverse (-)			NTL = PTL from T_REF
TCS = Torque Command Select DI function; P2-10~P2-17 = 16 (TCS0) & 17 (TCS1).				

P2-64 Settings (continued):

2 Forward Torque Limit (Torque Limit applies only in forward direction)

If T_REF < 0 $TL_P = 0$

If 0 < T_REF < |PTL| $TL_P = T_REF$

If T_REF > |PTL| $TL_P = PTL$

Torque Limit Clamp Selection for P2-64 = 2				
Torque Enable Method	Motor Direction	Torque Comand Select DI		Active Torque Clamp
		TCS1 (17)	TCS0 (16)	
P1-02 = 1x or DI: P2-10~P2-17 = 09	forward (+) or reverse (-)	0	0	NTL = 0 torque PTL = T_REF AI
		0	1	NTL = 0 torque PTL = P1-12
		1	0	NTL = 0 torque PTL from P1-13
		1	1	NTL = 0 torque PTL from P1-14
DI: P2-10~P2-17 = 25	forward (+)	N/A		NTL = 0 torque PTL = T_REF AI
	reverse (-)			NTL = 0 torque PTL = P1-12
DI: P2-10~P2-17 = 26	forward (+)	N/A		NTL = 0 torque PTL = P1-13
	reverse (-)			NTL = 0 torque PTL = T_REF AI
TCS = Torque Command Select DI function; P2-10~P2-17 = 16 (TCS0) & 17 (TCS1).				

P2-64 Settings (continued):

3 Reverse Torque Limit (Torque Limit applies only in reverse direction)

If T_REF > 0 $TL_N = 0$

If -|NTL| < T_REF < 0 $TL_N = -T_REF$

If T_REF < -|NTL| $TL_N = NTL$

Torque Limit Clamp Selection for P2-64 = 3				
Torque Enable Method	Motor Direction	Torque Comand Select DI		Active Torque Clamp
		TCS1 (17)	TCS0 (16)	
P1-02 = 1x or DI: P2-10~P2-17 = 09	forward (+) or reverse (-)	0	0	NTL = T_REF AI PTL = 0 torque
		0	1	NTL = P1-12 PTL = 0 torque
		1	0	NTL from P1-13 PTL = 0 torque
		1	1	NTL from P1-14 PTL = 0 torque
DI: P2-10~P2-17 = 25	forward (+)	N/A		NTL = T_REF AI PTL = 0 torque
	reverse (-)			NTL = P1-12 PTL = 0 torque
DI: P2-10~P2-17 = 26	forward (+)	N/A		NTL = P1-13 PTL = 0 torque
	reverse (-)			NTL = T_REF AI PTL = 0 torque
TCS = Torque Command Select DI function; P2-10~P2-17 = 16 (TCS0) & 17 (TCS1).				

P2-65 Special Input Functions

Mem Addr: 0241[h]

Range: 0 ~ FFFF [h] Units: bit
Default: 0 Control Modes: P/V/T

- This parameter varies by firmware version. For revision details, refer to "Appendix D: Latest *Sure*Servo Firmware Revisions".
- This is a multi-function parameter that controls the behavior of several different DI and DO/alarm functions. For most applications this parameter does not need to be changed. However, if you require some different behavior from some of the inputs or Alarm 08, you can modify certain behaviors by turning the parameter bits ON or OFF as described. Set these parameter bits directly through software, or manually set the parameter to the hexadecimal number that forms the binary bit pattern required for your application.

P2-65 Bit Number	15	14	13	12	11	10	9	8	7	6	5	4	3	2	1	0
Applicable DI or DO	n/a					DI 1~8	n/a			DO 1~5	n/a	DI8			DI 1~8	DI 1~8
DI or DO Function Setting						05				07; ALE08		new function			16, 17	14, 15

Settings:

Bit 0 Contact type for DI assigned as VCS0 or VCS1 (P2-10~P2-17 codes 14 or 15).
0 level sensing
1 rising edge sensing

Bit 1 Contact type for DI assigned as TCS0 or TCS1 (P2-10~P2-17 codes 16 or 17).
0 level sensing
1 rising edge sensing

Bit 2 Contact type for DI8 when assigned as Fast DI per bits 3~4 of this parameter (P2-65).
0 rising edge trigger or normally open contact
1 falling edge trigger or normally closed contact

Bits 3~4

B4	B3	DI8 Function
0	0	Disable Fast DI function for DI8
0	1	Enable Fast Position Latch for DI8: This is a new DI function that works in conjunction with P0-04~P0-05 Status Monitor setting 15 or 16. DI8 serves as a fast trigger to latch Position Counts (15) or Position Revs (16) into a Status Monitor.
1	0	Enable Fast DI Inhibit for DI8: Works in conjunction with P2-17 = 07 (Position Command Pause) or 45 (Inhibit Pulse Command - Terminal). Initiates quicker stop; Fast DI response time is 0.0~0.1 ms (vs. 0.4~0.6 ms for normal DI).

Bit 5 reserved; must remain set = 0

P2-65 Settings (continued):

Bit 6 Disable ALE08 Abnormal Pulse Control Command alarm
- 0 Enable ALE08 for Pulse Control Command > 570 kpps
- 1 Disable ALE08 for Pulse Control Command > 570 kpps

Bits 7~9 reserved; must remain set = 0

Bit 10 System behavior when zero velocity clamp conditions are met; when Low Velocity Clamp DI (P2-10~P2-17 code 05) is active and the velocity of the motor is less than P1.38 setting; valid only in velocity modes.
- 0 Motor halts at present position; ramp settings disregarded
- 1 Velocity command is forced to 0rpm using ramp settings

Bit 11~15 reserved; must remain set = 0

Communication Parameters

P3-00 Communication Address — Mem Addr: 0300[h]

Range: 1 ~ 254 — Units: n/a
Default: 1 — Control Modes: P/V/T

- This parameter sets the Modbus slave address for this system. The address must be unique with regard to other drives on a 422/485 network, and must be within the range from 1 through 254.

P3-01 Transmission Speed — Mem Addr: 0301[h]

Range: 0 ~ 5 — Units: bps
Default: 2 — Control Modes: P/V/T

- This parameter sets the baud rate of the serial communications.

Settings:

0	4800 bps Baud rate
1	9600 bps Baud rate
2	19200 bps Baud rate
3	38400 bps Baud rate
4	57600 bps Baud rate
5	115200 bps Baud rate

P3-02 Communication Protocol — Mem Addr: 0302[h]

Range: 0 ~ 8 — Units: n/a
Default: 8 — Control Modes: P/V/T

- This parameter sets the communication protocol for serial communications.

Modbus ASCII Mode Settings:

0	7 data bits, no parity, 2 stop bits (7,N,2)
1	7 data bits, even parity, 1 stop bit (7,E,1)
2	7 data bits, odd parity, 1 stop bit (7,O,1)
3	8 data bits, no parity, 2 stop bits (8,N,2)
4	8 data bits, even parity, 1 stop bit (8,E,1)
5	8 data bits, odd parity, 1 stop bit (8,O,1)

Modbus RTU Mode Settings:

6	8 data bits, no parity, 2 stop bits (8,N,2)
7	8 data bits, even parity, 1 stop bit (8,E,1)
8	8 data bits, odd parity, 1 stop bit (8,O,1)

P3-03 Communication Fault Action

Mem Addr: 0303[h]

Range: 0 ~ 1 Units: n/a
Default: 0 Control Modes: P/V/T

- This parameter determines how the system will behave if a communication error occurs.

Settings:

0	Display fault and continue operating
1	Display fault and stop operating; [P1-32 determines how the drive will stop (i.e. coast to stop, or stop with dynamic braking)].

P3-04 Communication Watchdog Time Out

Mem Addr: 0304[h]

Range: 0 ~ 20 (0 = disable) Units: s
Default: 0 Control Modes: P/V/T

- This parameter sets the maximum amount of time allowed before faulting due to communication inactivity (watchdog routine). If this is set to a non-zero value, the servo drive must receive a valid request before the allotted time. Otherwise, the servo assumes the controller has failed and shuts down accordingly.

P3-05 Communication Selection

Mem Addr: 0305[h]

Range: 0 ~ 2 Units: n/a
Default: 0 Control Modes: P/V/T

Settings:

0	RS-232 (must be a point-to-point connection)
1	RS-422 (multidrop connection)
2	RS-485 (multidrop connection)

P3-06 Reserved

Range: n/a Units: n/a
Default: 0[h] Control Modes: n/a

- Do NOT modify this parameter.

P3-07 Communication Response Delay Time

Mem Addr: 0307[h]

Range: 0 ~ 255 Units: 0.5 ms
Default: 0 Control Modes: P/V/T

- This parameter sets a time used to internally delay the response to a master controller. Some Modbus masters may require that the response to their request not be returned too quickly, so that they can setup to properly receive it. This is generally found in older controllers.

P3-08 Digital Input Software Control Mask

Mem Addr: 0308[h]

Range: 0 ~ FFFF [h] Units: bit
Default: 0 Control Modes*: P/V/T

*** The upper eight bits of this parameter are effective only in Pr Mode.**

- The lower byte of this parameter allows some or all of the drive's Digital Inputs to be controlled via Modbus communications instead of via external hardware. The DIs are controlled by external hardware by default. Control of any or all of the DIs can be changed to Modbus communication by setting the corresponding bit of the P3-08 lower byte to a logic one.
- The upper byte of this parameter provides an additional eight Virtual Digital Inputs for use only in Pr control mode. These Virtual DI have factory assigned functions, and are controlled only via Modbus communications
- Use P4-07 to write to the actual and virtual DI that are enabled and configured for Modbus control using this parameter (P3-08).
- This parameter varies by firmware version. For revision details, refer to "Appendix D: Latest *Sure*Servo Firmware Revisions".

P3-08 Bit #	15	14	13	12	11	10	9	8	7	6	5	4	3	2	1	0
Actual CN1 DI	-	-	-	-	-	-	-	-	DI8	DI7	DI6	DI5	DI4	DI3	DI2	DI1
Pr Mode Virtual DI	DI16	DI15	DI14	DI13	DI12	DI11	DI10	DI9	-	-	-	-	-	-	-	-

P3-08 Virtual DI Factory Assigned Functions			
Bit #	DI #	DI Active State & Function Code	DI Function Description
8	9	108	Command Trigger (Pr mode only)
9	10	111	Position Command Select 0 (PCS0)
10	11	112	Position Command Select 1 (PCS1)
11	12	113	Position Command Select 2 (PCS2)
12	13	102	Alarm Reset
13	14	127	Start Home Move Trigger
14	15	137	Jog Forward
15	16	138	Jog Reverse

Settings:

Bit 0~7; DI1~DI8:	0	DI controlled by external hardware
	1	DI controlled by Modbus communications
Bit 8~15; DI9~DI16;	0	Disable Virtual DI
	1	Enable Virtual DI control via Modbus communications

Diagnostic Parameters

P4-00 **[1] Fault Record - Most recent (N)** Mem Addr: 0400[h]

Range: ALE01 ~ ALE22 Units: n/a

Default: 0 Control Modes: P/V/T

- This parameter stores the most recent fault code on record. P4-01 through P4-04 stores previous fault code records in order of occurrence.

P4-01 **[1] Fault Record (N-1)** Mem Addr: 0401[h]

Range: ALE01 ~ ALE22 Units: n/a

Default: 0 Control Modes: P/V/T

- This parameter stores the second most recent fault code on record.

P4-02 **[1] Fault Record (N-2)** Mem Addr: 0402[h]

Range: ALE01 ~ ALE22 Units: n/a

Default: 0 Control Modes: P/V/T

- This parameter stores the third most recent fault code on record.

P4-03 **[1] Fault Record (N-3)** Mem Addr: 0403[h]

Range: ALE01 ~ ALE22 Units: n/a

Default: 0 Control Modes: P/V/T

- This parameter stores the fourth most recent fault code on record.

P4-04 **[1] Fault Record (N-4)** Mem Addr: 0404[h]

Range: ALE01 ~ ALE22 Units: n/a

Default: 0 Control Modes: P/V/T

- This parameter stores the fifth most recent fault code on record.

P4-05 JOG Function

Mem Addr: 0405[h]

Range: 1 ~ 5000 | Units: rpm

Default: 20 | Control Modes: P/V/T

- This parameter is a function that applies a command to move the system. The operation instructions are as follows:

Operation from the Keypad:

1. Press the Enter key to set the JOG velocity (the default value is 20 rpm). The jog can be set from 1 rpm to the maximum allowable rpm (see P1-55).
2. Press the Enter key again to activate JOG mode and the display will show JOG. Note: The servo system must be enabled without any active faults in order for the motor to turn.
3. Press and hold the UP or DOWN arrow keys to move the motor CW or CCW (depends upon the direction setting; see P1-01).
4. To change the JOG velocity again, press the MODE key, then repeat operation sequence above.

Operation using Digital Inputs:

In order to control the jog function from the digital inputs, they must first be configured (see P2-10 through P2-17);
Jog Forward is code 37,
Jog Reverse is code 38.
Once they are configured, they can be used to initiate the jog function.

Communication Control:

Write the following values to the parameter via serial communications:

First enter 0 ~ 3000 to set the velocity in rpm.

Then use:

4998	Move CCW command
4999	Move CW command
5000	Stop Command.

Please note:

1. When using communication control, P2-30 should be set to 5 in order to prevent excessive writes to the system flash memory.
2. It is necessary in all above cases that the servo is enabled in order to produce movement in the system.

WARNING: Unexpected and potentially dangerous results can occur if the JOG function is used when the servo drive is configured to run a velocity profile. For example, if you put the drive in JOG mode when it is configured to run a velocity profile, the velocity profile setting will take control and run the servo at the profile setting velocity. Pressing an arrow key will jog the motor at the jog speed while the key is depressed, but the motor will return to the velocity profile setting as soon as the arrow key is released.

P4-06 [2] Force Outputs Command

Mem Addr: 0406[h]

Range: 00 ~ 1F [h] Units: n/a
Default: 00 Control Modes: P/V/T

- Use this parameter to independently force the state of the digital outputs (Refer to P2-18 ~ P2-22 to assign the DO functions).

Operation Instructions:

Select P4-06 and press the ENTER key. The display will then show "OP xx", where xx represents the parameter range from 00 to 1F in hex numbers. The two hex digits represent five binary bits which correspond to the five DO. The least significant bit represents DO1, and the most significant bit represents DO5. When the bit = 1 the corresponding DO is active, and when the bit = 0 the corresponding DO is inactive.

Warning: P4-06 takes effect immediately. The outputs change state immediately as the value in P4-06 is incremented or decremented.

1) The outputs revert to normal operation when you exit P4-06.
2) The force outputs function is intended for test purposes only. It will not function if the servo drive is enabled.

P4-07 Input Status

Mem Addr: 0407[h]

Range: 0 ~ FFFF [h] Units: n/a
Default: 0[h] Control Modes: P/V/T

- Use this parameter to read the status of the digital inputs (Refer to P2-10 ~ P2-17 to assign DI functions). The least significant bit (bit 0) shows DI1 status, and bit 7 shows DI8 status.
- Use this parameter in conjuction with P3-08 to change the status of actual and virtual Digital Inputs via Modbus communications.
- This parameter varies by firmware version. For revision details, refer to "Appendix D: Latest *Sure*Servo Firmware Revisions".

P4-08 Reserved

Range: n/a Units: n/a
Default: n/a Control Modes: n/a

P4-09 Output Status

Mem Addr: 0409[h]

Range: 00 ~ 1F [h] (0 = disable) Units: n/a
Default: 00 Control Modes: P/V/T

- Use this parameter to independently read the status of the digital outputs.

Operation instructions:

Select P4-09 on the keypad, and press Enter. The corresponding display LEDs will be on for each DO that is active. The least significant display digit represents DO1, and the third least significant digit represent DO5. (The two most significant digits are inactive for this parameter function.)

P4-10 **Reserved**

P4-11 **Reserved**

P4-12 **Reserved**

P4-13 **Reserved**

P4-14 **Reserved**

P4-15 **Reserved**

P4-16 **Reserved**

P4-17 **Reserved**

P4-18 **Reserved**

P4-19 **Reserved**

P4-20 **[5] Analog Monitor 1 Offset (Ch1)** Mem Addr: 0414[h]

Range: ±800 Units: mV

Default: 0 Control Modes: P/V/T

- Use this parameter to add an offset value (in mV) to the actual Analog Monitor Output 1 (in V).

P4-21 **[5] Analog Monitor 2 Offset (Ch2)** Mem Addr: 0415[h]

Range: ±800 Units: mV

Default: 0 Control Modes: P/V/T

- Use this parameter to add an offset value (in mV) to the actual Analog Monitor Output 2 (in V).

P4-22 Analog Velocity Input Offset

Mem Addr: 0416[h]

Range: ±5000 Units: mV
Default: 0 Control Modes: V

- Use this parameter to add an offset value to the Analog Velocity Input. Set the parameter value such that (P4-22)/1000 is the input voltage at which you need zero velocity.
  Velocity Command = ((P1-40)/10) [(Input V) - ((P4-22)/1000)]; Limit ±(P1-40)

Example 1:

Adjust P4-22 in small increments to trim a signal so that a 0V command results in no rotation of the motor.

Example 2:

To allow a 0 to 10V signal to control positive and negative motion, set this parameter value to 5000 (5V). This will offset the input signal (potentiometer, etc.) so that the midpoint of the range provides a command of zero speed to the drive.

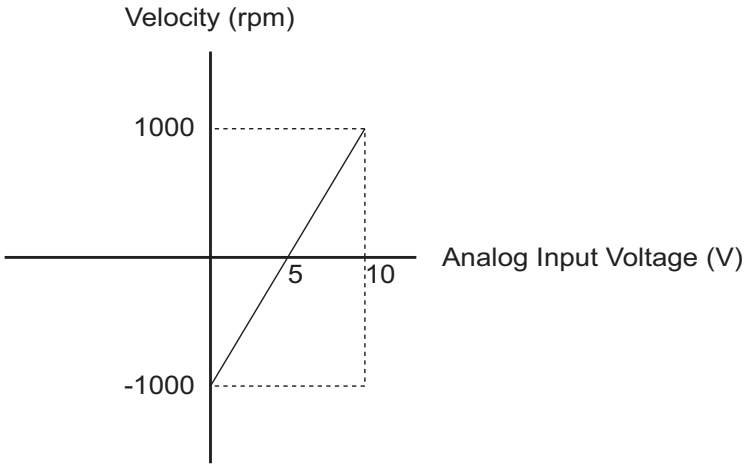

P4-22 = 5000 mV; [5000 mV = 5V]
P1-40 = 2000 rpm; [velocity range = -1000 to +1000 = 2000 rpm]

For velocity range of -2000 to 2000 rpm from 0 to10V AI,
set P1-40 Maximum Analog Velocity Command (gain) to 4000 rpm.

P4-23 Analog Torque Input Offset

Mem Addr: 0417[h]

Range: ±5000 Units: mV
Default: 0 Control Modes: T

- Use this parameter to add an offset value to the Analog Torque Input. Set the parameter value such that (P4-23)/1000 is the input voltage at which you need zero torque.
  Velocity Command = ((P1-41)/10) [(Input V) - ((P4-23)/1000)]; Limit ±(P1-41)

Refer to P4-22 for examples. (P4-23 affects torque instead of velocity, but otherwise operates the same as P4-22. P1-41, Max Analog Torque Command, is the parameter that determines the gain, or slope, for the Analog Torque Input.)

BLANK
PAGE

Control Modes of Operation and Tuning

Chapter 5

In This Chapter...

Control Modes of Operation 5–2

How to Change Control Modes 5–2

Position Control Modes 5–3

Structure of Position Control Modes 5–3
Electronic Gear Ratio 5–4
Position Command Low-pass Filter 5–5
Position Loop Gain Adjustment 5–5
Command Source of Pt Position Control Mode 5–6
Command Source of Pr Position Control Mode 5–7
Timing Chart of Pr Position Control Mode 5–8
Teach Position Function for Pr Absolute Position Control 5–9
S-curve Filter for Pr Position Control 5–9
Parameters for Absolute and Incremental Pr Control 5–10
Parameters for Index Mode Pr Control 5–12
Parameters for Absolute and Incremental Auto Pr Control 5–22

Velocity Control Mode 5–27

Command Source of Velocity Control Mode 5–27
Structure of Velocity Control Mode 5–28
Smoothing Strategy of Velocity Control Mode 5–29
Analog Velocity Input Scaling 5–30
Timing Chart of Velocity Control Mode 5–30
Velocity Loop Gain Adjustment 5–31
Resonance Suppression 5–31

Control Modes of Operation and Tuning

Chapter 5

In This Chapter (continued)...

Torque Control Mode 5–34

Command Source of Torque Control Mode 5–34

Structure of Torque Control Mode 5–35

Smoothing Strategy of Torque Control Mode 5–35

Analog Torque Input Scaling 5–36

Timing Chart of Torque Control Mode 5–36

Dual Control Modes Selection 5–37

Position / Velocity Control Mode Selection 5–37

Position / Torque Control Mode Selection 5–38

Velocity / Torque Control Mode Selection 5–39

Limits 5–40

Velocity Limit 5–40

Torque Limit 5–40

Regenerative Resistor 5–41

Built-in Regenerative Resistor 5–41

External Regenerative Resistor 5–41

Electromagnetic Brake 5–43

Control Modes of Operation and Tuning

Chapter 5

In This Chapter (continued)...

Tuning Modes Overview 5–45

Purpose of Tuning; Why and When it is Necessary 5–45

*Sure*Servo™ Tuning Modes Available 5–46

Tuning Modes and Their Relevant Parameters 5–47

Monitoring System Performance 5–47

Tuning Modes Details 5–48

Auto-Tuning Modes 5–48

Using Auto-Tune PI Mode 5–49

Using Auto-Tune PDFF Mode 5–51

Using Easy-Tune Mode 5–53

Using Manual Tuning Mode 5–55

Manual Tuning Mode Details 5–57

Control Modes of Operation

*Sure*Servo drives can be programmed to provide six single and five dual modes of operation, as selected by parameter P1.01. The mode operations and descriptions are listed in the following table.

*Sure*Servo Control Modes of Operation				
	Mode	**Symbol**	**P1.01**	**Description**
Single Mode	External Position Control (Position - terminals)	Pt	00	Position control for the servo motor is achieved via external pulse/count commands. Quadrature, pulse + direction, and CW/CCW are supported.
Single Mode	Internal Position Control (Position - registers)	Pr	01	Position control for the servo motor is achieved via command positions stored within the servo drive. Selection of the 8 possible position preset setpoints occurs via Digital Input (DI) signals.
Single Mode	Velocity Control	V	02	Velocity control for the servo motor is achieved via an external analog ±10 Vdc command signal, or via velocity setpoints stored within the drive. Digital Inputs select either the analog signal or one of three internal setpoints.
Single Mode	Internal Velocity Control	Vz	04	Velocity control for the servo motor is achieved via velocity setpoints stored within the controller. Selection of the 3 velocity setpoints occurs via Digital Inputs (DI).
Single Mode	Torque Control	T	03	Torque control for the servo motor is achieved via an external analog ±10 Vdc command signal or torque setpoints stored within the drive. Digital Inputs select either the analog signal or one of three internal preset setpoints.
Single Mode	Internal Torque Control	Tz	05	Torque control for the servo motor is achieved via torque setpoints within the controller. Selection of the 3 torque parameters occurs via Digital Inputs (DI).
Dual Mode	Ext. Pos. - Velocity	Pt-V	06	Either Pt or V control modes can be selected via DI signals.
Dual Mode	Ext. Position - Torque	Pt-T	07	Either Pt or T control modes can be selected via DI signals.
Dual Mode	Int. Pos. - Velocity	Pr-V	08	Either Pr or V control modes can be selected via DI signals.
Dual Mode	Int. Position - Torque	Pr-T	09	Either Pr or T control modes can be selected via DI signals.
Dual Mode	Velocity - Torque	V-T	10	Either V or T control modes can be selected via DI signals.

How to Change Control Modes

1) Disable the servo drive by removing the Servo Enable signal.
2) Adjust parameter P1-01. (Refer to the Parameters chapter for more info.)
3) After changing the parameter value, power to the drive must be cycled for the change to take effect.

The following sections describe the operation of each control mode.

Position Control Modes

The position control modes (Pt or Pr mode) are used in applications requiring precision positioning, such as index tables, slides, etc. The *Sure*Servo drive supports two kinds of command sources in position control mode. One is an external pulse train (**Pt**: Position-Terminals), and the other is internal parameter settings (**Pr**: Position-Registers; the drive's **Internal Indexer** function).

In order to provide a convenient position control function, the *Sure*Servo drive's **Internal Indexer** function provides eight internal preset position parameters for position control. The selection of which position command to use comes from three digital inputs. While this allows the inputs to select eight possible command positions, the actual number of selectable positions is infinite since each parameter is addressable via the Modbus interface. The Pr mode also allows for **Index Mode** (to control rotary tables, tool changers, etc.) and **Auto Position Mode** (for sequencing multiple moves together).

To allow the servo motor and load to operate more smoothly, the *Sure*Servo drive also provides complete Position Spine Line (S-curve) profile for position control mode. For closed-loop positioning, users may need to set not only the velocity control parameters, but also the position loop gain and feed forward compensation parameters. Three different tuning modes (Manual/Auto/Easy) allow the user to choose simple gain set-ups or to fine-tune the servo system with complete tuning flexibility. This chapter describes the applicability of loop gain adjustment, feed forward compensation, and tuning technology of *Sure*Servo systems.

Structure of Position Control Modes

Basic Block Diagram of Position Control (Pt and Pr)

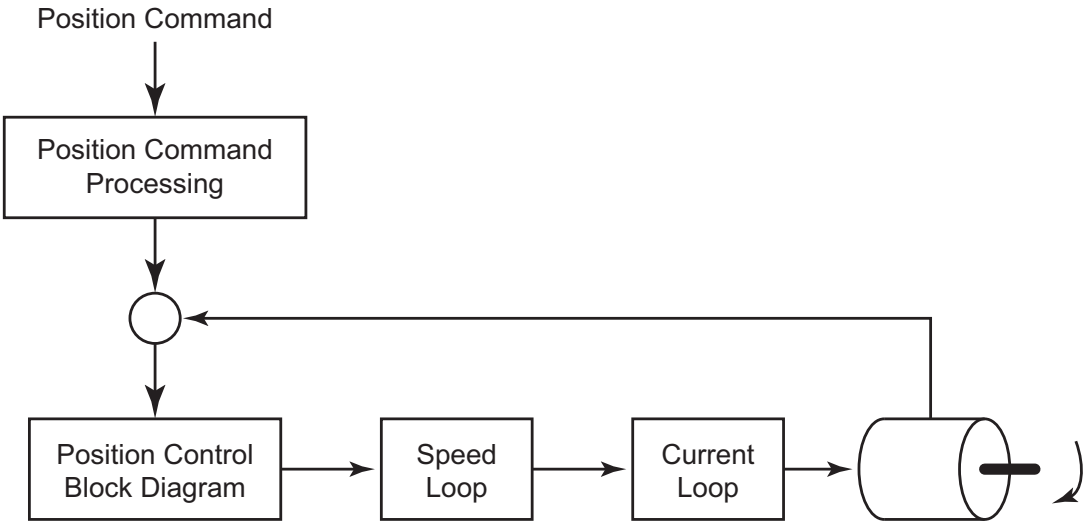

Basic Block Diagram of Position Command Processing

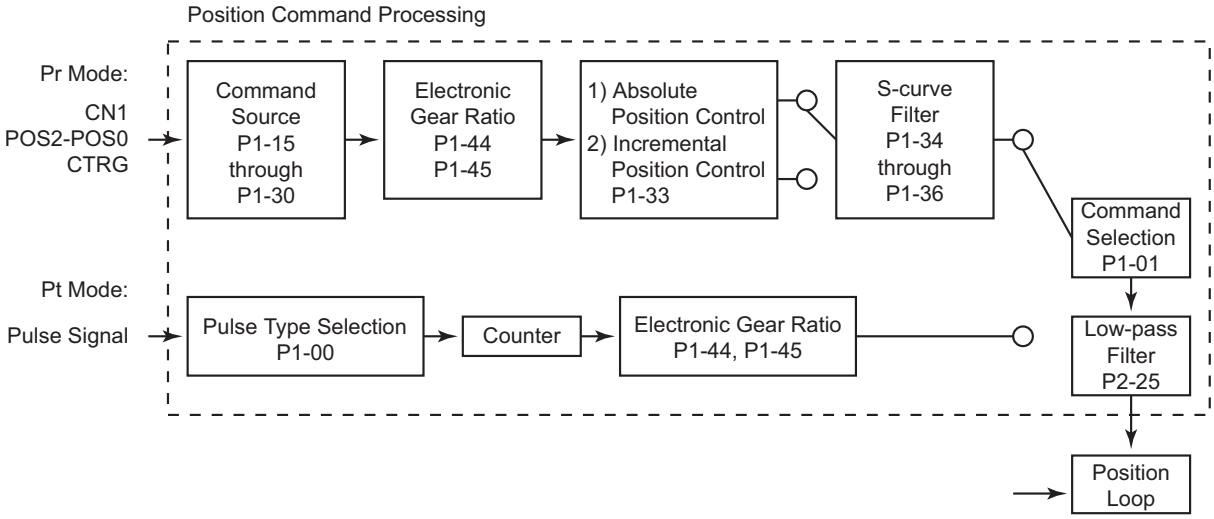

The **Electronic Gear Ratio** (P1-44, P1-45) can be used in both Pt and Pr modes to configure the proper scaling of input pulse signals to output motor positioning. *Sure*Servo drives also provide a **Low-pass Filter** (P1-8) for Pt and Pr modes, and a **S-curve Filter** (P1-34, P1-35, P1-36) for Pr mode. Explanations of these settings follow later in this chapter.

Electronic Gear Ratio

Electronic gear ratio = (N_1/M) = (P1-44)/(P1-45).

The electronic gear setting range should be $(1/50) \leq (N_1/M) \leq 200$.

The Electronic Gear Ratio (EGR) is the number of output counts divided by the number of input pulses. It allows the user to scale the high-velocity positioning pulses coming into the drive, and is used to set some number of command counts to a unit of measure. For example: on a linear slide application, the input pulses can be scaled by electronic gearing so that 1 input pulse = 1 mm of travel. Electronic Gearing can also be used to increase the velocity at which the controller can command the motor to move. For example: Without electronic gearing (EGR = 1), a PLC that could only output a maximum pulse stream of 5kHz, would yield a 30 rpm maximum motor velocity:

(5,000 pulse/sec)(60 sec/min)(1 count/pulse) / (10,000 count/rev) = 30 rpm.

By inserting an Electronic Gear Ratio of 100:1, the 5kHz PLC could command the motor at a maximum of 3000 rpm. (EGR = output counts / input pulses)

(5,000 pulse/sec)(60 sec/min)(100 count/pulse) / (10,000 count/rev) = 3,000 rpm.

There are tradeoffs when using Electronic Gearing. While the above example will allow a 5kHz PLC output to move a *Sure*Servo motor at 3000 rpm, the downside is that the system loses resolution. While the motor still has a hardware resolution of 10,000 individual positions per resolution, every command pulse now coming into the *Sure*Servo drive causes the motor to increment its position by 100 motor counts.

Position Command Low-pass Filter

The low pass filter (LPF) smoothes the incoming command pulses (in Pt mode), and the command step changes (in Pr mode). This feature can be used to reduce vibration inherent in some very rigid systems. The LPF can also smooth the motor reaction to systems that have erratic pulse inputs (generated by encoders, sensors, etc.). P1-08 sets the LPF, and a value of 0 disables it.

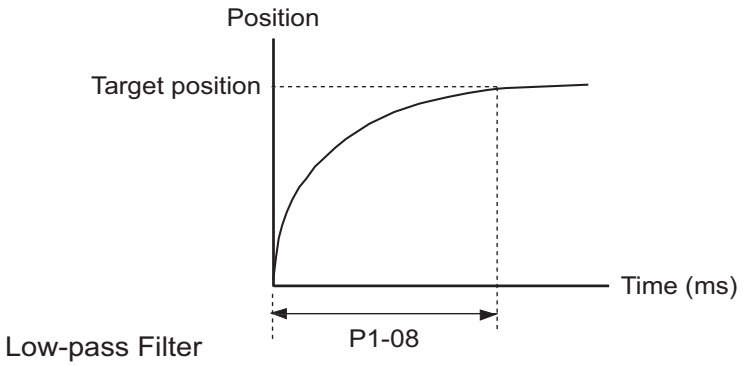

Position Loop Gain Adjustment

Before performing position control, the user should complete the velocity mode tuning, since position loop control depends on the velocity loop. (Refer to the "Tuning Modes" sections of this chapter for information on tuning methods.)

The position loop is adjusted by the Position Loop Proportional Gain, KPP (P2-00), and the Position Feed Forward Gain, KFF (P2-02). Increasing KPP will increase the response **bandwidth** of the position loop, and increasing KFF will reduce the phase delay time during operation. The phase delay will approach zero when the KFF setting is close to 100%.

(The response **bandwidth** is the frequency at which the system re-evaluates the position error. Higher bandwidths yield faster output responses, while lower bandwidths yield slower output responses.)

Since the Position Loop response is dependent upon the Velocity Loop, it is recommended that the Velocity Loop be at least four times faster than the Position Loop. This means that the Velocity Loop Proportional Gain, KVP (P2-04), should be at least four times larger than the Position Loop Proportional Gain, KPP (P2-00).

- The Position Loop Proportional Gain (KPP) is defined as:
  KPP = $(2)(\pi)(f_p)$ where f_p is the bandwidth of the position loop response.
- The Velocity Loop Proportional Gain (KVP) is similarly defined as:
  KVP = $(2)(\pi)(f_v)$ where f_v is the bandwidth of the velocity loop response.
- So, the bandwidths should have the following relation:
  $f_p \leq (f_v)/4$.

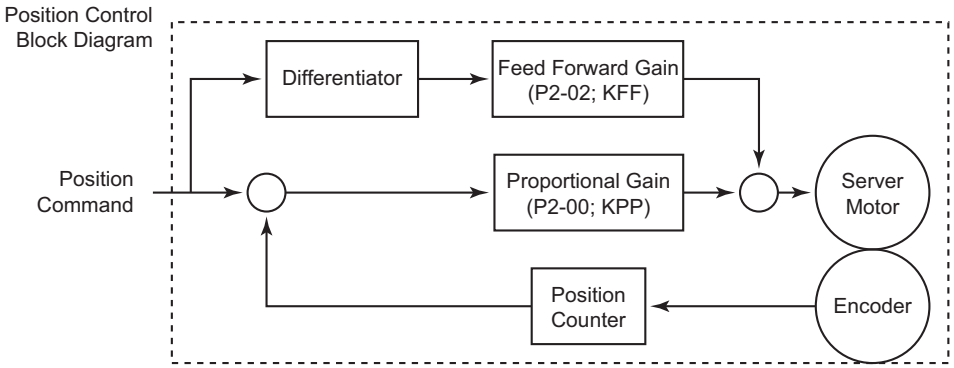

When the value entered into the Proportional Gain (KPP) is too great, the bandwidth of the position loop will be too high and there will be a small phase margin. When this happens, the motor's rotor will begin to oscillate. The motor will continually overshoot and undershoot its command position, and will eventually fault due to position error or overload. Decrease the value of KPP until the rotor does not violently vibrate. A low value of KPP will cause the motor to lose position when there is a disruption caused by the load. If there is not enough gain, then the motor will not overcome external forces to drive the motor into its commanded position.

Adjust the Feed Forward Gain (KFF) to reduce the dynamic position following error. The following graphs illustrate the effects of increasing KPP and KFF.

KPP = Position Loop Proportional Gain (P2-00)
KFF = Position Feed Forward Gain (P2-02)

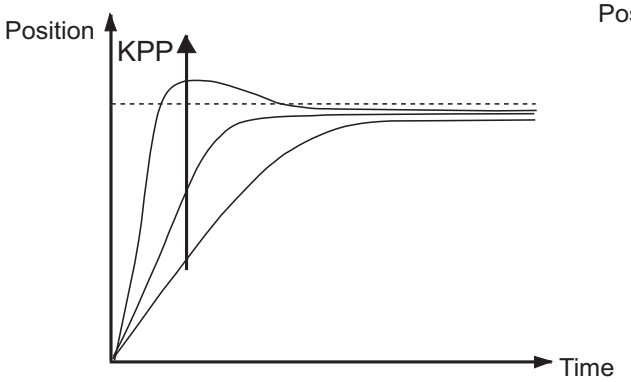

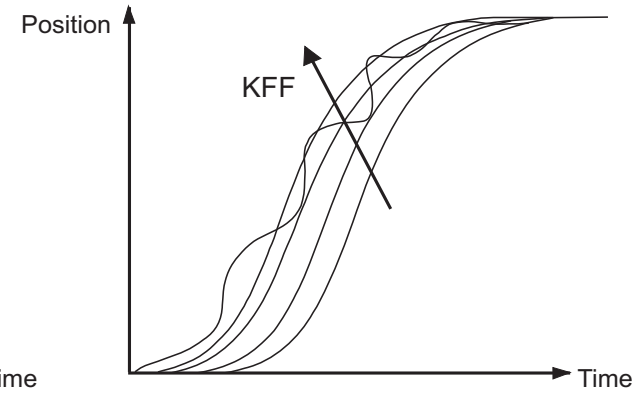

Command Source of Pt Position Control Mode

The command source of the **Pt** (Position - terminals) mode comes from an external pulse train. Parameter P1-00 selects one of the three possible types of pulse inputs, and the polarity of the signals. The three possible position input types are Pulse/Direction, CW/CCW, and Quadrature. Refer to the Parameters chapter for details.

The position command pulse inputs (terminals 36, 37, 41, 43) can be open-collector (200kpps) or line driver (500kpps). For the detailed wiring, please refer to the “Installation and Wiring” chapter of this manual.

Command Source of Pr Position Control Mode

The internal positioning mode, **Pr**, uses the drive's **Internal Indexer** for position control. The command sources of this mode are the 16 registers P1-15 through P1-30, which provide up to eight different command positions. Each command position consists of one register which defines the number of complete motor revolutions (setpoint is entered in motor revolutions), and a second register which defines any fraction of a revolution (setpoint is entered in counts; **each motor revolution is 10,000 counts, or pulses**). Parameter P1-33 selects either Absolute or Incremental position control. Digital inputs (Position Command Select 0, 1, 2) are used to select which preset position will be used as the target. The selected move is initiated by the rising edge of the digital input configured as the Command Trigger.

Pr Control Mode Position Command Selection

Position Command	DI PCS2	DI PCS1	DI PCS0	Parameters	Description
P1	0	0	0	P1-15	Revolutions (±30,000)
				P1-16	Counts (±10,000)
P2	0	0	1	P1-17	Revolutions (±30,000)
				P1-18	Counts (±10,000)
P3	0	1	0	P1-19	Revolutions (±30,000)
				P1-20	Counts (±10,000)
P4	0	1	1	P1-21	Revolutions (±30,000)
				P1-22	Counts (±10,000)
P5	1	0	0	P1-23	Revolutions (±30,000)
				P1-24	Counts (±10,000)
P6	1	0	1	P1-25	Revolutions (±30,000)
				P1-26	Counts (±10,000)
P7	1	1	0	P1-27	Revolutions (±30,000)
				P1-28	Counts (±10,000)
P8	1	1	1	P1-29	Revolutions (±30,000)
				P1-30	Counts (±10,000)

Notes:
1) PCS = Position Command Select DI function; P2-10~P2-17 settings 11~13.
2) Position Command DI status: 0 indicates DI is inactive; 1 indicates DI is active.
3) The position command is activated by an Off to On transition of the Command Trigger DI.

In **Absolute Positioning** (P1-33 = 0), the command positions determine an absolute position for the motor to move to. If P1-15 = 4, and P1-16 = -5000, the motor will proceed to an absolute position of 3½ revolutions regardless of where the motor was previously. (Refer to the Parameters chapter of this manual for further details.) Absolute mode is ideally suited for positioning tables, linear slides, robotics, or other applications where the motor position is always referenced back to a known home position.

In **Incremental Positioning** (P1-33 = 1), the same parameters of P1-15 = 4 and P1-16 = -5000 would cause the motor to move 3½ revolutions from it's current location. Incremental mode is ideal for conveyors, pull belts, or other applications where the motor does not need to be referenced back to a single position: the motor only needs to move a certain distance each cycle.

The difference between absolute and incremental position control is shown on the graphs below. Assume the servo is homed and starts at an actual position of zero (0). The servo is given position commands of 10 revolutions, then 20 revolutions. If the drive is in Absolute Mode, the motor would go to an absolute position of 10 revolutions, then the motor would go to an absolute position of 20 revolutions. In Incremental Mode, the motor would move 10 revolutions, then the motor would move an additional 20 revolutions (ending up a total of 30 revolutions from 0).

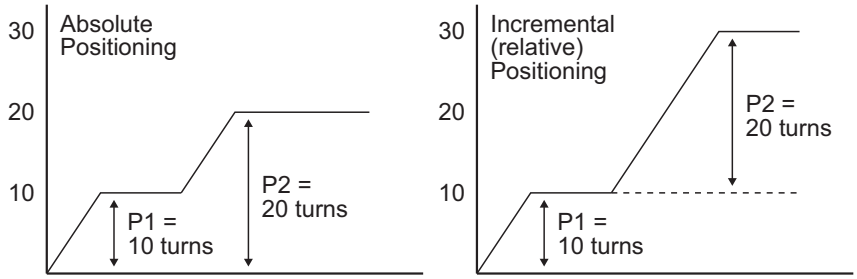

Timing Chart of Pr Position Control Mode

In Pr mode, the position command source is derived from the Digital Input signals from CN1 (Position Command Select 0, 1, and 2, as well as the Command Trigger). The following diagram shows the timing relationship between these DI command signals. The Position Command Select inputs need to be held on for a minimum of 1ms before the Command Trigger input initiates a move.

The Debounce Filter parameter, P2-09, is used to filter electrical noise and prevent false Command Triggers. The more P2-09 is increased, the less susceptible the system is to noise. However, increasing P2-09 too much may filter out intended triggers.

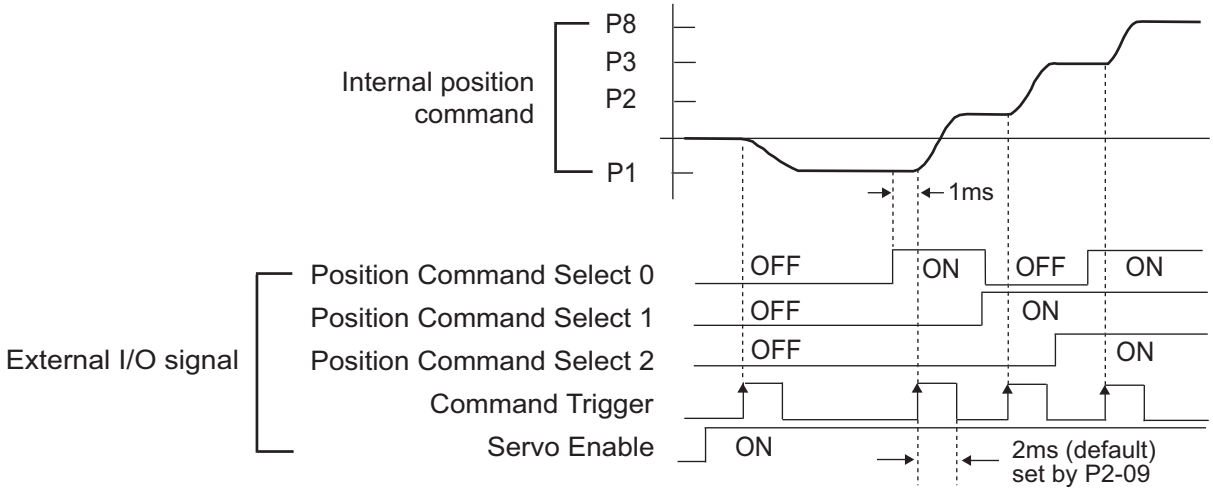

Teach Position Function for Pr Absolute Position Control

A Teach Position Function is available for use in the Pr Mode with Absolute Positioning. This function allows users to jog the motor to the desired positions and set those positions as the Target Positions. In many cases, this method is easier than entering numeric values directly into P1-15 ~ P1-30. Refer to the "Teach Position Function" subsection of the "Keypad and Display Operation" chapter for more information on the Teach Position Function.

S-curve Filter for Pr Position Control

The S-curve filter smoothes the command position in Pr mode when changing from one position setpoint to another. Since the position commands are not smooth and continuous, the S-curve is set to filter this step response and allow the servo to smoothly transition from one position to another. S-curve is not used in the Pt control mode because the acceleration, deceleration and rate of change is usually handled by the motion controller.

The three parameters used in the S-curve filtering are Acceleration Time (P1-34), Deceleration Time (P1-35), and S-curve Time (P1-36). The relationship between these three settings and how they respond to a step change in command position can be seen in the following graphs. (P1-34 determines both the acceleration and deceleration ramps in the forward direction, and P1-35 determines accel and decel in reverse.)

If P1-36 is set to zero, the S-curve function is disabled, and the filter is bypassed.

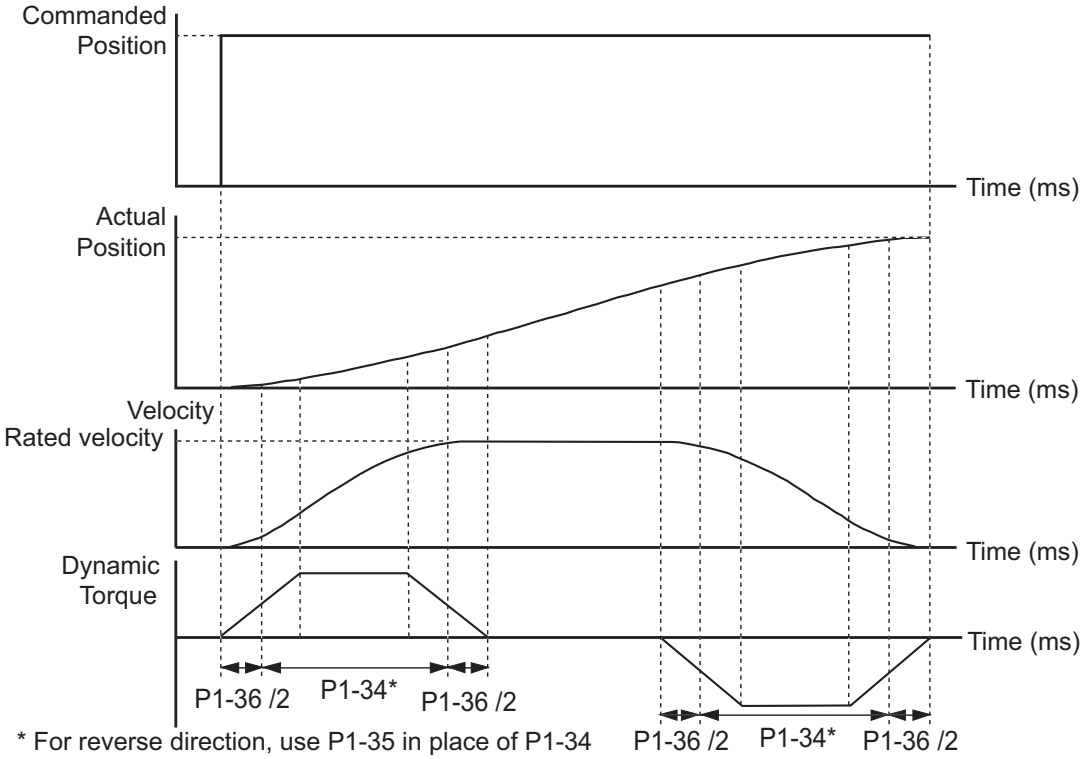

* For reverse direction, use P1-35 in place of P1-34

S-curve characteristics and Time relationship during Acceleration; Forward Direction*

Parameters for Absolute and Incremental Pr Control (P1-33 = 0,1)

Generally Relevant Parameters

Pr Control Mode Relevant Parameters Absolute and Incremental Positioning (P1-33 = 0, 1)	
Parameter	**Parameter Settings**
P1-01 Control Mode and Output Direction	Settings: 1: Forward = CCW rotation 101: Forward = CW rotation
P1-08 Position Command Low-pass Filter	Setting Range: 0~1000 x10ms
P1-15 ~ P1-30 Position Commands	Setting Ranges: ±30,000 revolutions ±10,000 counts (Refer to separate table below)
P1-33 Position Control Mode	Settings: 0: Absolute Position Mode 1: Incremental Position Mode
P1-34 Acceleration Time	Setting Range: 1~20,000 ms Valid only if P1-36 > 0
P1-35 Deceleration Time	Setting Range: 1~20,000 ms Valid only if P1-36 > 0
P1-36 Acceleration/Deceleration S-curve	Setting Range: 0~10,000 ms P1-34 and P1-35 are disabled when P1-36 = 0
P1-44, P2-60 ~ P2-62 Electronic Gear Numerators	Setting Range: 0~32,767 counts Select which numerator is active using DI (P2-10 ~ P2-17).
P1-45 Electronic Gear Denominator	Setting Range: 0~32,767 counts
P1-47 Homing Mode	Settings: 202: Forward Homing 203: Reverse Homing
P1-50 Home Position Offset (rev)	Setting Range: ±30,000 revolutions
P1-51 Home Position Offset (counts)	Setting Range: ±10,000 counts
P2-10 ~ P2-17 Digital Input Terminals	Settings: 43: Electronic Gear Numerator Selection bit 0 44: Electronic Gear Numerator Selection bit 1
P2-36 ~ P2-43 Position Velocities	Setting Range: 1~5000 rpm (Refer to separate table below)

Positioning Parameters

Pr Control Mode Positioning Parameters Absolute and Incremental Positioning (P1-33 = 0, 1)		
Position	**Position Command Parameters**	**Position Velocity Parameter**
1	P1-15 revolutions; P1-16 counts	P2-36
2	P1-17 revolutions; P1-18 counts	P2-37
3	P1-19 revolutions; P1-20 counts	P2-38
4	P1-21 revolutions; P1-22 counts	P2-39
5	P1-23 revolutions; P1-24 counts	P2-40
6	P1-25 revolutions; P1-26 counts	P2-41
7	P1-27 revolutions; P1-28 counts	P2-42
8	P1-29 revolutions; P1-30 counts	P2-43

Trigger Timing Chart for Absolute and Incremental Pr Control

Refer to the “Timing Chart of Pr Position Control Mode” section of this chapter.

Pause Timing Chart for Absolute and Incremental Pr Control

If the Position Command Pause digital input becomes active while the servo motor is moving, the motor will decelerate and stop according to the deceleration settings of P1-35 and P1-36. When the Command Trigger DI goes active again, the motor will move the remaining number of pulses until it reaches the target position that was previously set.

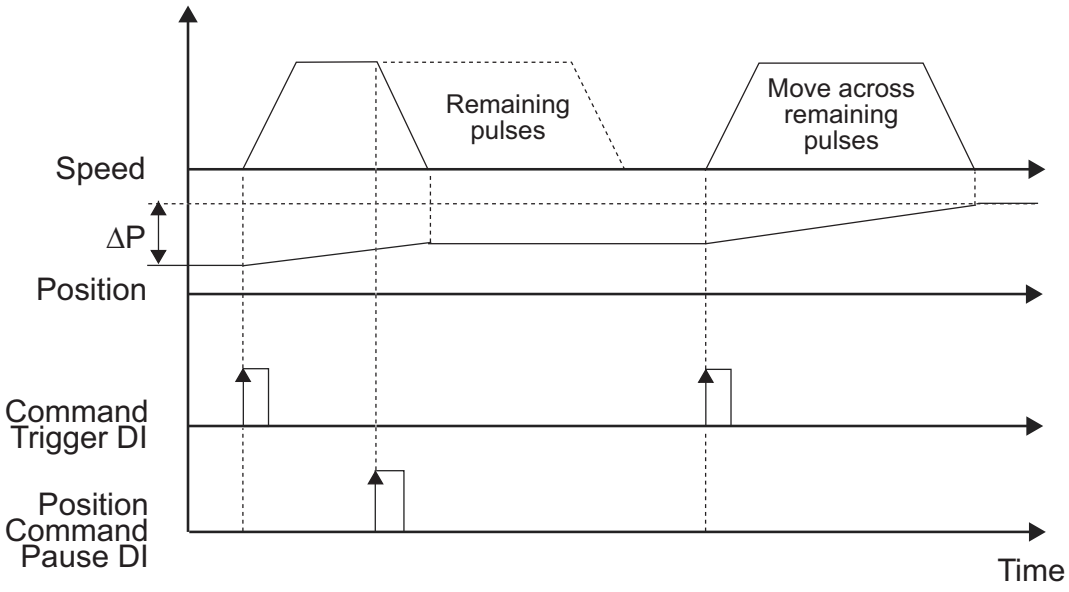

Clear Timing Chart for Absolute and Incremental Pr Control

This Clear Command feature can be used if P2-50 is set to 2. If the Clear Command digital input becomes active while the servo motor is moving, the motor will decelerate and stop according to the deceleration settings of P1-35 and P1-36. The remaining position pulses will be cleared. When the Command Trigger DI goes active again, the motor will move from it's present position to the target position that is currently set.

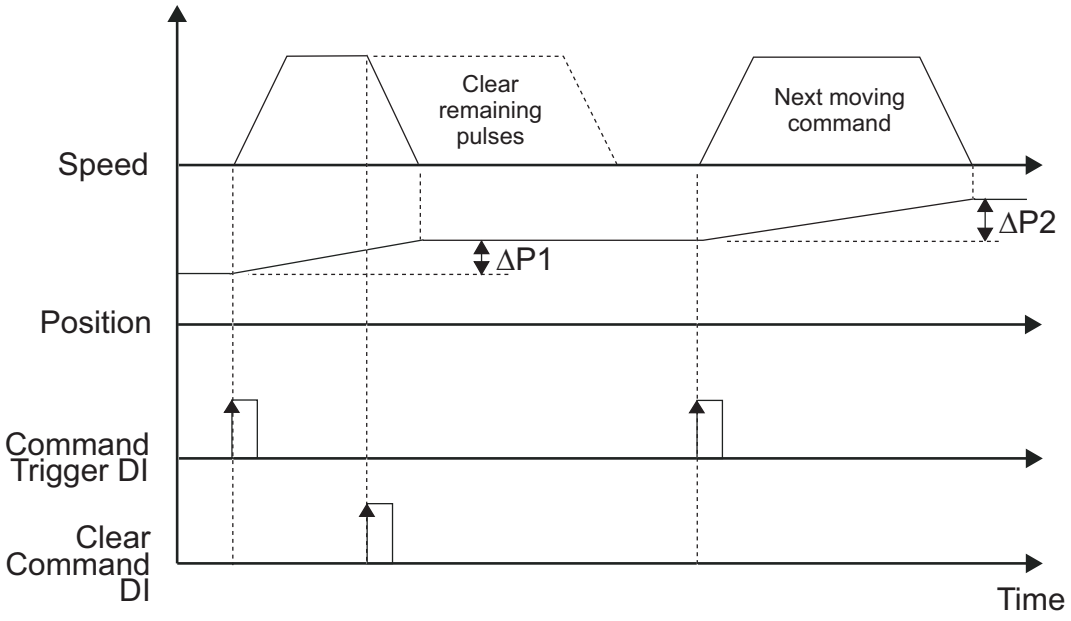

Parameters for Index Mode Pr Control (P1-33 = 2,3,4)

Generally Relevant Parameters for Index Mode Pr Control

Pr Control Mode Relevant Parameters Index Mode Positioning (P1-33 = 2,3,4)	
Parameter	**Parameter Settings**
P1-01 Control Mode and Output Direction	Settings: 1: Forward = CCW rotation 101: Forward = CW rotation
P1-12 Torque Limit 1	Setting Range: ±300 % (In Index Modes, the Torque Limit can be used in combination with the Index Mode Control digital inputs to command a "Torque Decrease" when at an Index Position.)
P1-33 Position Control Mode	Settings: 2: Forward Operation Index Mode 3: Reverse Operation Index Mode 4: Shortest Path Index Mode
P1-34 Acceleration Time	Setting Range: 1~20,000 ms Valid only if P1-36 > 0
Table continued on next page.	

Pr Control Mode Relevant Parameters Index Mode Positioning (P1-33 = 2,3,4) [continued]		
Parameter	**Parameter Settings**	
P1-35 Deceleration Time	Setting Range: 1~20,000 ms Valid only if P1-36 > 0	
P1-36 Acceleration/Deceleration S-curve	Setting Range: 0~10,000 ms P1-34 and P1-35 are disabled when P1-36 = 0	
P1-44 Electronic Gear Numerator	Setting Range: 0~32,767 counts	Set the EGR numerator and denominator to the ratio of motor turns per one turn of the load. Example: If the load table turns once for every 100 turns of the motor, then set P1-44 = 100, and P1-45 = 1.
P1-45 Electronic Gear Denominator	Setting Range: 0~32,767 counts	
P1-47 Homing Mode	Settings: 202: Forward Homing 203: Reverse Homing	
P1-50 Home Position Offset (rev)	Setting Range: ±30,000 revolutions	
P1-51 Home Position Offset (counts)	Setting Range: ±10,000 counts	
P1-55 Maximum Velocity Limit	Setting Ranges: 0~5000 rpm (SVL-2xxx low inertia motors) 0~3000 rpm (SVM-2xxx medium inertia motors)	
P2-10 ~ P2-17 Digital Input Terminals	Settings: (Refer to Digital I/O Parameters table below for Index Mode Selections)	
P2-36 Position Velocity	Setting Range: 1~5000 rpm (If P2-36 > 3000, set P1-55 appropriately) (This velocity applies to all Indexes.)	
P2-44 Digital Output Mode	Settings: 0: Outputs function per P2-18 ~ P2-22 1: Outputs indicate current status during index mode operation (Refer to DO Signals table below for status indications.)	
P2-45 Index Mode Output Signal Delay Time	Setting Range: 0~250 x4ms (Applicable only if P2-44 = 1) (This parameter delays the DO signals.)	
P2-46 Index Mode Stations	Setting Range: 2~32 stations (This parameter determines the total number of index stations on the load table, changer, etc.)	
P2-47 Position Deviation Clear Delay Time	Setting Range: 0~250 x20ms	
P2-51 Servo Enable Command	Settings: 0: Servo Enable controlled by DI per P2-10 ~ P2-17 1: Servo Enable is activated when control power is applied to servo (Recommended in this mode only, because Index Mode Control DI handle Fault Stop function.)	

Digital I/O Parameters for Index Mode Pr Control

Pr Control Mode Digital I/O Parameters Index Mode Positioning (P1-33 = 2,3,4)		
DI Signal	**Parameter Setting**	**Explanation**
DI1	P2-10 = 128	Index Mode Select 0
DI2	P2-11 = 129	Index Mode Select 1
DI3	P2-12 = 130	Index Mode Select 2
DI4	P2-13 = 131	Index Mode Select 3
DI5	P2-14 = 124	Home Sensor
DI6	P2-15 = 101	Servo Enable
	P2-15 = 132	Index Mode Select 4
	P2-15 = 35 (use N.C. contact)	Index Mode - Manual Continuous Operation
	P2-15 = 36 (use N.C. contact)	Index Mode - Manual Single Step Operation
DI7	P2-16 = 33 (use N.C. contact)	Index Mode Control 0
DI8	P2-17 = 34 (use N.C. contact)	Index Mode Control 1
DO Signal	**Parameter Setting**	**Explanation**
DO1	P2-18 = 101	Servo Ready
DO2	P2-19 = 103	At Zero Velocity
DO3	P2-20 = 109	Homing Completed
DO4	P2-21 = 105	At Position
DO5	P2-22 = 107	Active Fault

Functions of Pr Index Mode DI Codes 33, 34, 35,36				
Status	**Manual Index Mode Operation Continuous or Single Step DI Code 35 or 36**	**Index Mode Control 1 DI Code 34**	**Index Mode Control 0 DI Code 33**	**Function**
1	OFF	OFF	OFF	Decrease Torque
2		ON	OFF	Index Mode
3		OFF	ON	Home Position Mode
4		ON	ON	Fault Stop
	ON	x	x	don't care
		ON	OFF	CW manual operation
		OFF	ON	CCW manual operation
		x	x	don't care
Notes:	1) The Fault Stop message will display if DI code 35 or 36 are ON when power is cycled to the drive. If 35 or 36 then go OFF, the Fault Stop message will automatically clear. 2) The Fault Stop message will display when the status is switched directly from 2 to 3, or from 3 to 2. To prevent this situation, switch to status 1 first; i.e. 2 to 1 to 3, or 3 to 1 to 2.			

Index Selection Using Pr Index Mode Select DI					
Index Mode Select 4 DI Code 32	Index Mode Select 3 DI Code 31	Index Mode Select 2 DI Code 30	Index Mode Select 1 DI Code 29	Index Mode Select 0 DI Code 28	Index Number
0	0	0	0	0	**1**
0	0	0	0	1	**2**
0	0	0	1	0	**3**
0	0	0	1	1	**4**
0	0	1	0	0	**5**
0	0	1	0	1	**6**
0	0	1	1	0	**7**
0	0	1	1	1	**8**
0	1	0	0	0	**9**
0	1	0	0	1	**10**
0	1	0	1	0	**11**
0	1	0	1	1	**12**
0	1	1	0	0	**13**
0	1	1	0	1	**14**
0	1	1	1	0	**15**
0	1	1	1	1	**16**
1	0	0	0	0	**17**
1	0	0	0	1	**18**
1	0	0	1	0	**19**
1	0	0	1	1	**20**
1	0	1	0	0	**21**
1	0	1	0	1	**22**
1	0	1	1	0	**23**
1	0	1	1	1	**24**
1	1	0	0	0	**25**
1	1	0	0	1	**26**
1	1	0	1	0	**27**
1	1	0	1	1	**28**
1	1	1	0	0	**29**
1	1	1	0	1	**30**
1	1	1	1	0	**31**
1	1	1	1	1	**32**
0 = open ; 1 = closed					-

Pr Index Mode Indications of DO Signals						
#	DO5	DO4	DO3	DO2	DO1	DO Indication
0	0	0	0	0	0	Alarm
1	0	0	0	0	1	Servo Ready
2	0	0	0	1	0	Homing Operation in Progress
3	0	0	0	1	1	Home Operation Completed
4	0	0	1	0	0	Index Position Change in Progress
5	0	0	1	0	1	Index Position 1 Attained
6	0	0	1	1	0	Index Position 2 Attained
7	0	0	1	1	1	Index Position 3 Attained
8	0	1	0	0	0	Index Position 4 Attained
9	0	1	0	0	1	Index Position 5 Attained
10	0	1	0	1	0	Index Position 6 Attained
11	0	1	0	1	1	Index Position 7 Attained
12	0	1	1	0	0	Index Position 8 Attained
13	0	1	1	0	1	Index Position 9 Attained
14	0	1	1	1	0	Index Position 10 Attained
15	0	1	1	1	1	Index Position 11 Attained
16	1	0	0	0	0	Index Position 12 Attained
17	1	0	0	0	1	Index Position 13 Attained
18	1	0	0	1	0	Index Position 14 Attained
19	1	0	0	1	1	Index Position 15 Attained
20	1	0	1	0	0	Index Position 16 Attained
21	1	0	1	0	1	Index Position 17 Attained
22	1	0	1	1	0	Index Position 18 Attained
23	1	0	1	1	1	Index Position 19 Attained
24	1	1	0	0	0	Index Position 20 Attained
25	1	1	0	0	1	Index Position 21 Attained
26	1	1	0	1	0	Index Position 22 Attained
27	1	1	0	1	1	Index Position 23 Attained
28	1	1	1	0	0	Index Position 24 Attained
29	1	1	1	0	1	Index Position 25 Attained
30	1	1	1	1	0	Index Position 26 Attained
31	1	1	1	1	1	Index Position 27 Attained
-	0 = open ; 1 = closed					-

If the DO indication switches to Servo Ready (DO = 1) during a Homing operation, remove any abnormal conditions and then re-Home to ensure that the Home position is correct.

Timing Charts of Pr Index Mode DI/DO Signals Operation

Pr Index Mode Home Search Timing Chart

In this example, Homing Mode P1-47 is set to 0202
(detect home position, decelerate and return home;
homing started by DI; stop and return to Z index mark; move forward to home sensor)

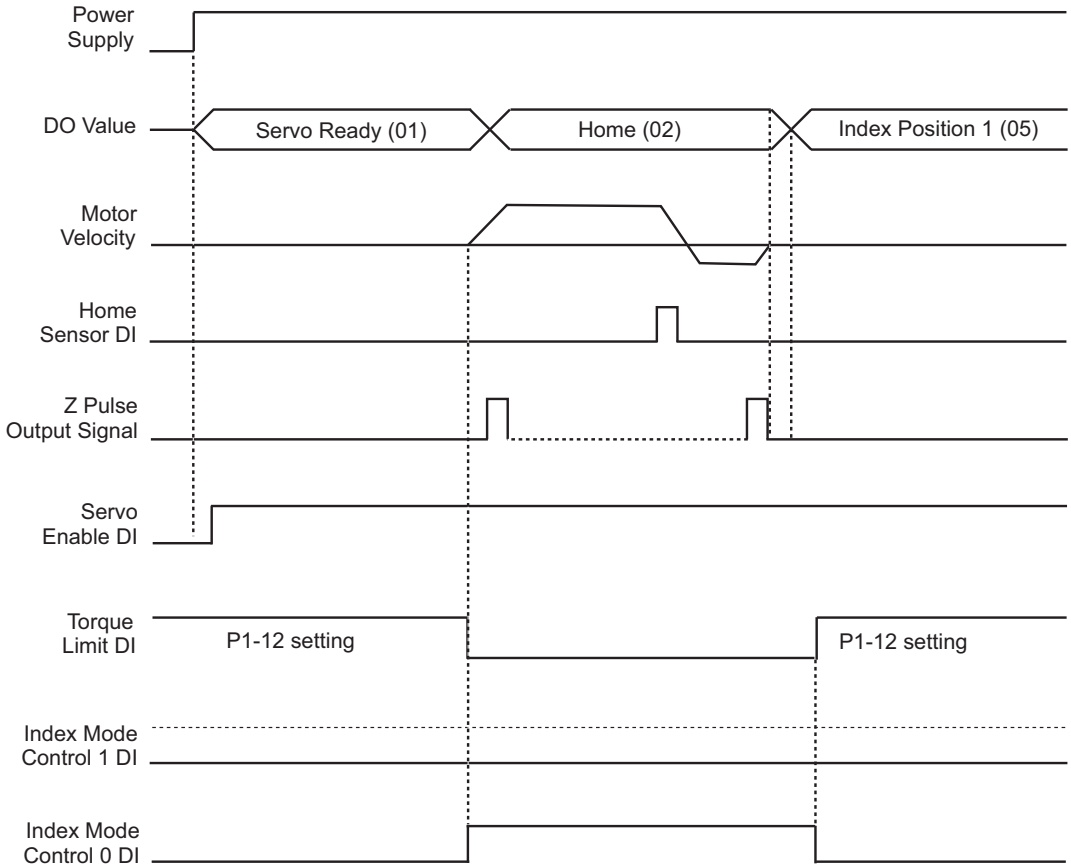

Pr Index Mode Timing Chart using Clear Command DI

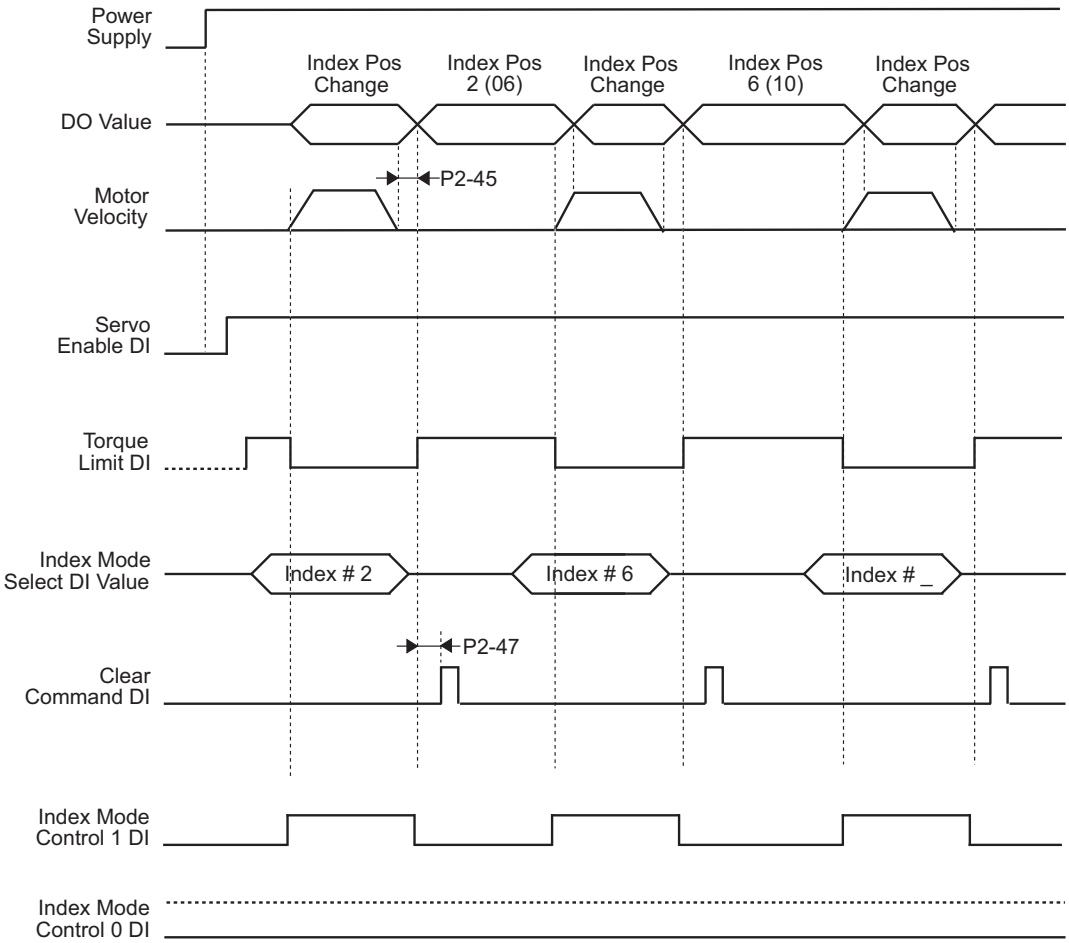

The maximum value of P2-45 = 125 x $T_{minimum}$, where $T_{minimum}$ is the minimum time from A to B, i.e. starting to run at A and starting to run at B. (Time unit is 1 sec.) Refer to the figure below:

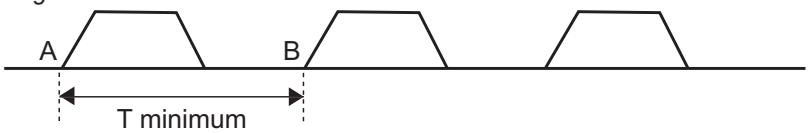

Pr Index Manual Mode Timing Chart using Step Forward DI

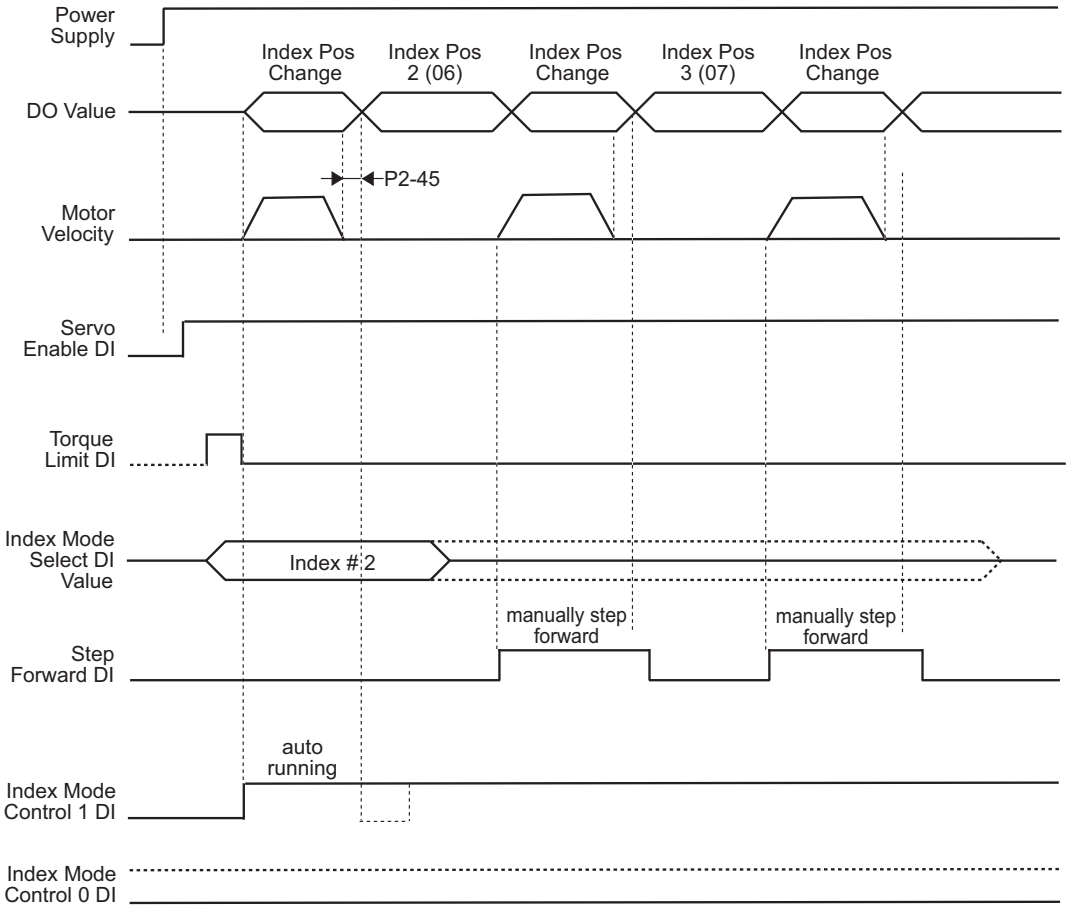

1) The manual step forward velocity is set by parameter P2-36.
2) Set the Index Mode Control 1 DI ON before using the Step Forward DI to initiate the move. The Index Mode Select DI should remain unchanged to prevent returning to Index # 1 when the Step Forward operation occurs.

Pr Index Manual Mode Timing Chart using Manual Single Step DI

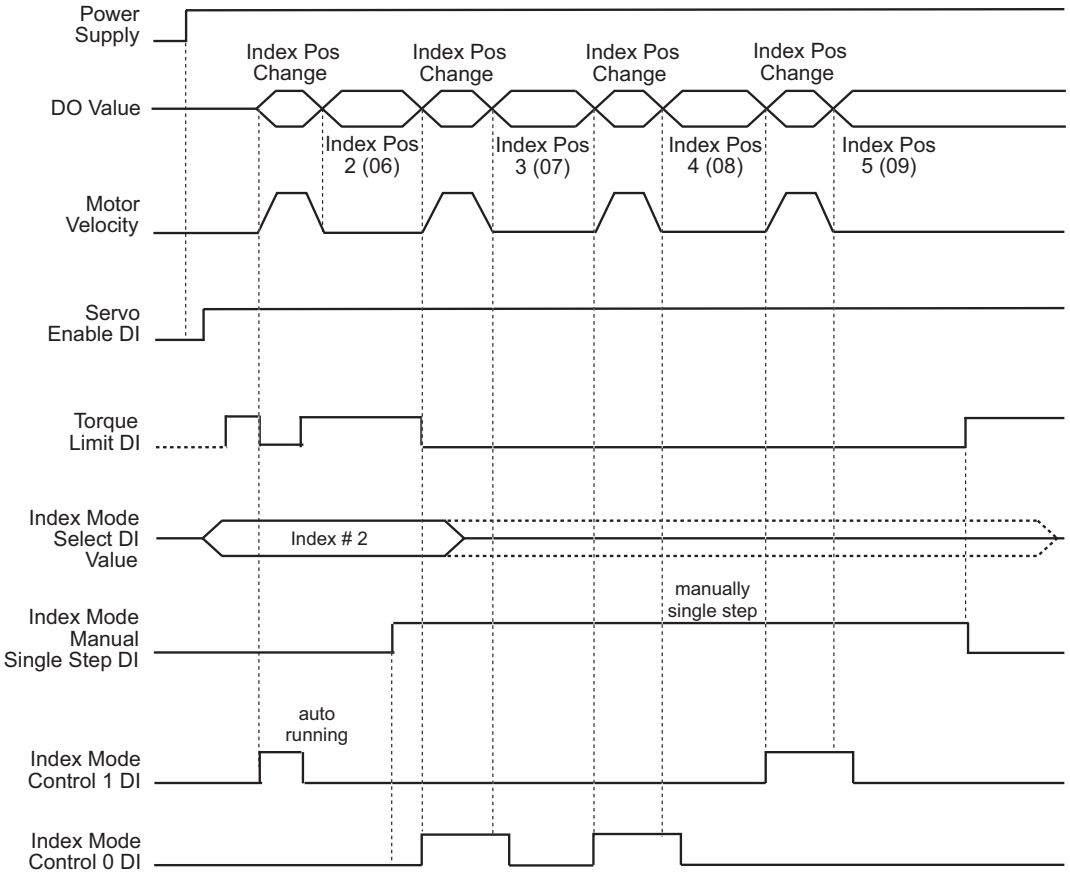

The manual single step velocity is set by parameter P2-36.

When the Index Mode Manual Single Step DI is ON, the rising edge of the Index Mode Control 0 DI will initiate a forward single step, and a rising edge of the Index Mode Control 1 DI will initiate a reverse single step.

To prevent abnormal conditions, follow this procedure after the single step operation is completed:
1) Turn the Index Mode Control 0 and 1 DI OFF.
2) Then cycle the Index Mode Manual Single Step DI from ON to OFF

Pr Index Manual Mode Timing Chart using Manual Continuous DI

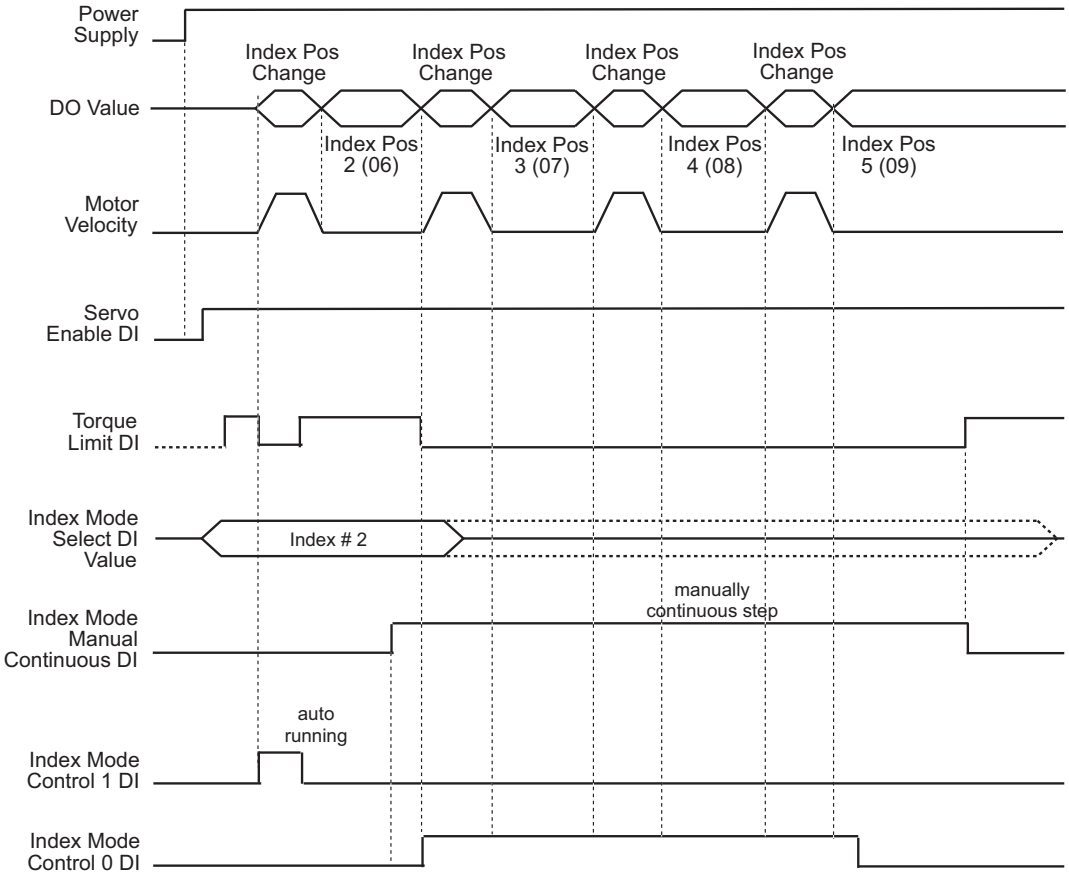

The manual continuous operation velocity is set by parameter P2-36.

When the Index Mode Manual Continuous Operation DI is ON, the servo motor will continuously operate forward while the Index Mode Control 0 DI is ON, and will continuously operate in reverse while the Index Mode Control 1 DI is ON.

To prevent abnormal conditions, follow this procedure after the manual continuous operation is completed:
1) Turn the Index Mode Control 0 and 1 DI OFF.
2) Then cycle the Index Mode Manual Continuous Operation DI from ON to OFF

Parameters for Absolute and Incremental Auto Pr Control (P1-33 = 5,6)

Internal Absolute and Incremental Auto Position Modes allow the *Sure*Servo Drive to be easily programmed to step through a series of eight unique indexes (moves). They are the same indexes available in the standard Pr mode (Parameters P1-15 ~ P1-30). In normal Pr mode (P1-33 = 00 or 01), a controller must select each individual index through a binary combination of Digital Inputs. In Auto Index Position Mode (P1-33 = 05 or 06), the drive will step itself through a series of indexes (moves). Each index can be triggered either by Digital Inputs (Step Forward or Step Reverse), or can be set to automatically start a set period of time after the preceding index has completed. Auto Position Mode is ideal for applications where the sequence of motions for the servo will not change. (The actual command positions can be changed via Modbus).

The following instructions assume some familiarity with the *Sure*Servo system. Please read the rest of this chapter and the QuickStart Guide (Appendix A) before attempting to program the drive for Auto Position Control.

WARNING: **Always start any new servo setup with the motor shaft disconnected from the load. This could possibly save machinery or personnel from serious damage. DISCONNECT THE LOAD. Always wire an E-Stop circuit into the power feed for the drive. DO NOT rely on the Fault Stop digital input. Always disconnect the main incoming power for emergency stop conditions. (Control power can remain ON.)**

Instructions for Absolute and Incremental Auto Position Control

1) Set P2-08 to 10. This will reset the drive to factory defaults.
2) Cycle power.
3) Set P1-31 to the correct motor code.
4) Set P1-33 to the correct Position Control Mode.
   P1-33 = 5; Absolute Auto Position Mode
   P1-33 = 6; Incremental Auto Position Mode
5) Set P1-01 to the correct Control Mode.
   P1-01 = 00001; Pr Position Control Mode (command setpoints via internal registers)
6) Set the parameters for position, velocity, and dwell time. The position setpoints will either be incremental distances or absolute positions depending on the setting of P1-33. The velocity setpoints correspond to the appropriate indexes. The accompanying dwell times determine how many milliseconds will elapse between each move while the Step Forward and Step Reverse commands are constantly being issued, or when the Auto Indexing (continuous steps) Mode is selected. If the dwell time for any individual move is 0ms, that move will be bypassed in the sequence of operations.

Pr Control Mode Positioning Parameters Absolute and Incremental Auto Positioning (P1-33 = 5, 6)			
Position	**Position Command Parameters**	**Position Velocity Parameter**	**Dwell Time Parameter (x10ms)**
Index 1	P1-15 revolutions; P1-16 counts	P2-36	P2-52
Index 2	P1-17 revolutions; P1-18 counts	P2-37	P2-53
Index 3	P1-19 revolutions; P1-20 counts	P2-38	P2-54
Index 4	P1-21 revolutions; P1-22 counts	P2-39	P2-55
Index 5	P1-23 revolutions; P1-24 counts	P2-40	P2-56
Index 6	P1-25 revolutions; P1-26 counts	P2-41	P2-57
Index 7	P1-27 revolutions; P1-28 counts	P2-42	P2-58
Index 8	P1-29 revolutions; P1-30 counts	P2-43	P2-59

7) Set P1-34, P1-35, P1-36 for Acceleration, Deceleration, and S-curve. Without setting these parameters, the drive may fault when a move is first intitiated. Acceleration and Deceleration are ignored unless the S-Curve parameter is set to a non-zero amount.

P1-36 defaults to 0 when the drive is set to factory defaults. Without changing this parameter setting, the drive may fault when movement is initiated (a value of zero assumes instantaneous acceleration and deceleration).

8) Configure the Digital Inputs. Define the following functions for your inputs. (The following table is an example only. See the Parameters chapter for more information on changing the inputs' definitions and states [normally open vs. normally closed]).

Pr Control Mode DI Function Parameters Absolute and Incremental Auto Positioning (P1-33 = 5, 6)			
Digital Input	**DI Function Parameter**	**Parameter Setting**	**Function Description**
DI1	P2-10	124	Home Sensor
DI2	P2-11	121	Fault Stop
DI3	P2-12	0	Input Disabled
DI4	P2-13	127	Start Home Move Trigger
DI5	P2-14	140	Step Forward
DI6	P2-15	142	Auto Position Mode
DI7	P2-16	139	Step Reverse
DI8	P2-17	101	Servo Enable

9) Set P2-44, Digital Output Mode, to the desired setting. A value of 00 sets the Digital Outputs to function according to the settings in P2-18 ~ P2-22. A value of 01 sets the Digital Outputs to indicate the current position during index mode operation. They will generate the following binary code as status for an external controller. This is useful to check to see that the servo has arrived at the appropriate index point. This binary code is shown in P4-09, and can also be read via Modbus. (Refer to the "MODBUS Communications" chapter of this manual for information regarding Modbus communication.)

Pr Control Mode DO Signals Indications Parameters Absolute and Incremental Auto Positioning (P1-33 = 5, 6)						
#	DO5	DO4	DO3	DO2	DO1	DO Indication
0	0	0	0	0	0	Alarm
1	0	0	0	0	1	Servo Ready
2	0	0	0	1	0	Homing Operation in Progress
3	0	0	0	1	1	Home Operation Completed
4	0	0	1	0	0	Index Position Change in Progress
5	0	0	1	0	1	Index Position 1 Attained
6	0	0	1	1	0	Index Position 2 Attained
7	0	0	1	1	1	Index Position 3 Attained
8	0	1	0	0	0	Index Position 4 Attained
9	0	1	0	0	1	Index Position 5 Attained
10	0	1	0	1	0	Index Position 6 Attained
11	0	1	0	1	1	Index Position 7 Attained
12	0	1	1	0	0	Index Position 8 Attained
-	0 = open ; 1 = closed					-

10) Configure P1-47, Homing Mode (if necessary). The drive will automatically power up at position zero. If your application needs a homing reference, see P1-47 for configuration. A value of 0202 in P1-47 will configure the drive to look for an external home command signal. When the Home Sensor Digital Input is triggered, the drive will search for an external (DI) Home Sensor. When the home sensor is found, the drive will reverse and proceed to the next motor encoder Z-pulse. Your application may vary.

    P1-47 = 0202; Home to sensor when home command is issued.

11) Cycle power to the drive. This will allow all changes to take effect. The drive will now follow Step Forward/Step Reverse Commands and the Start Home Move Trigger Command.

When the drive is in Absolute Auto Position Mode (using absolute references for command position), the drive will not Step Reverse to zero position unless Position Command 1 (P1-15 and P1-16) is equal to zero.

An anomaly may occur when not all indexes are programmed (ie: Dwell Times = 0ms in P2-59, etc.). If the master controller (PLC) commands a Step Forward past the last valid position, the master controller will have to issue two Step Reverse commands before movement will occur. (Trying to Step past a valid Step 8 does not cause this anomaly; only one Step Reverse will initiate motion.)

Do not issue JOG or Home commands while Step Forward, Step Reverse, or Auto Index Position motions are occurring. The drive will halt the current move and immediately begin the commanded Jogging or Homing.

Command and Response Example for Absolute and Incremental Auto Pr Control

When in Internal (Pr) Auto Position Control Mode, the outputs can set to output a binary code to an external controller (PLC, etc.) Setting P2-44 to 1 will cause the outputs to follow the binary code shown previously. When in this state, the external controller can monitor the status of the *Sure*Servo Drive, not only for faults, but also for the position of the motor. The following is an example of the state of the drive outputs when P2-44 = 1. This can be monitored via DI signals going to an external controller's inputs, or can be read via Modbus from parameter P4-09; Modbus hex address 0x0409 ("1033" in 0-based Modbus addressing, "41034" in 1-based Modbus addressing).

This example is for Absolute Auto Position Mode (P1-33 = 5). All Indexes represent an absolute command position for the drive to go to. If using Incremental Auto Position Mode (P1.33 = 6), all Indexes will be lengths of moves. All other logic remains the same.

Example: Absolute and Incremental Pr Auto Positioning	
Action or Status	**P4-09 (DO Status) Value**
Drive is in Fault condition	0 - Alarm
Drive is powered up with no Faults	1 - Servo Ready
Start Home Move Trigger DI is triggered; homing sequence begins	2 - Homing Operation in Progress
Home sequence completes	3 - Home Operation Completed
Return to Index 1 DI is triggered; move begins from Home to Index Position 1	4 - Index Position Change in Progress
Motor arrives at Index Position 1	5 - Index Position 1 Attained
Step Forward DI is triggered; move begins to Index Position 2	4 - Index Position Change in Progress
Motor arrives at Index Position 2	6 - Index Position 2 Attained
Step Forward DI is triggered; move begins to Index Position 3	4 - Index Position Change in Progress
Motor arrives at Index Position 3	7 - Index Position 3 Attained
Step Reverse DI is triggered; move begins to Index Position 2	4 - Index Position Change in Progress
Motor arrives at Index Position 2	6 - Index Position 2 Attained
Step Reverse DI is triggered; move begins to Index Position 1	4 - Index Position Change in Progress
Motor arrives at Index Position 1	5 - Index Position 1 Attained

With this type of response behavior, it is very simple for a PLC to accurately maintain the drive status and motor location; even if no communication (Modbus, etc.) is available in the PLC. The DO (digital outputs) will relay the drive status (faulted, moving, current position, etc.). Remember, if any of the dwell times are zero, the corresponding index will be invalid (it will be skipped by the internal sequencer whenever STEP FWD, STEP REV, or Auto Index Mode are active).

If running Auto Index Mode, the sequence of events when Auto Index Position Mode DI is ON will be Index 1, Dwell Time 1, Index 2, Dwell Time 2, ….Index 7, Dwell Time 7, Index 8, Dwell Time 8, Index 1, Dwell Time 1, Index 2, Dwell Time 2, etc.

If running Step FWD/Step REV, then Stepping FWD past Index 8 will result in no motion. Stepping Rev past Index 1 also will result in no motion.

Velocity Control Mode

The Velocity Control modes (V and Vz) are used on applications of precision speed control, such as CNC machines, conveyor speed matching, etc. Typically, the command signal is generated from an analog motion controller (a CNC controller, for example), or from a speed sensing device (when matching one conveyor speed to another, etc.). The *Sure*Servo drive supports two kinds of command sources in Velocity Control mode; (1) external analog ±10Vdc signal and (2) internal velocity parameters.

The V mode (external) allows the user to select either the analog signal or one of three internal velocity settings. The Vz mode (internal) allows only the use of internal setpoints for velocity commands (a command of zero, plus three velocity setpoints). Both Velocity modes use two Digital Inputs to select which velocity command (analog and/or preset) is active.

In order for the *Sure*Servo motor and load to operate smoothly, the servo drive provides complete S-curve profiling in velocity control mode. The *Sure*Servo drive provides closed loop gain adjustment and an integrated PI controller. Also, the servo drive provides three modes of tuning technology (Manual/Auto/Easy).

Command Source of Velocity Control Mode

Velocity command sources:

1) External analog signal; external analog voltage input, -10V to +10V.
2) Internal parameter: P1-09 to P1-11.

Velocity Control Mode Command Source

Velocity Command	DI Signal		Command Source			Content	Range
	[1]VCS1(15)	[1]VCS0(14)					
Velocity #1	0	0	Mode	V	[2] External AI	Voltage V_{ref} to GND	±10V
				Vz	Zero Velocity	Velocity Command is 0	0
Velocity #2	0	1	Internal parameters			P1-09	±5000 rpm
Velocity #3	1	0				P1-10	±5000 rpm
Velocity #4	1	1				P1-11	±5000 rpm

Note 1: VCS = "Velocity Command Select" DI function; P2-10~P2-17 settings 14 (VCS0) and 15 (VCS1).

Note 2: When using AI velocity command, set P4-22 (Analog Velocity Input Offset) to trim the signal so that a 0V command results in no motor rotation.

If the Velocity Command Select digital inputs (VCS0 and VCS1) are both = 0, and the control mode of operation is Vz, then the velocity command is 0. Therefore, if users do not need to use analog voltage as a velocity command, they can choose Vz mode and avoid the zero point drift problem of analog voltage signals. If the current control mode of operation is V, then the command is the analog voltage between V-REF and GND. The setting range of the input voltage is from -10V to +10V and the corresponding rotation velocity is adjustable (see parameter P1-40).

When at least one of the Velocity Command Select inputs is enabled, the velocity command is the corresponding internal parameter shown in the table above. The command is valid (enabled) immediately after either VCS0 or VCS1 is changed. It is not necessary to trigger the Command Trigger digital input (as in Pr mode).

Note: The velocity commands are used as the velocity limit commands in the Torque Control modes (T or Tz mode).

Structure of Velocity Control Mode

Velocity Control Mode Basic Structure:

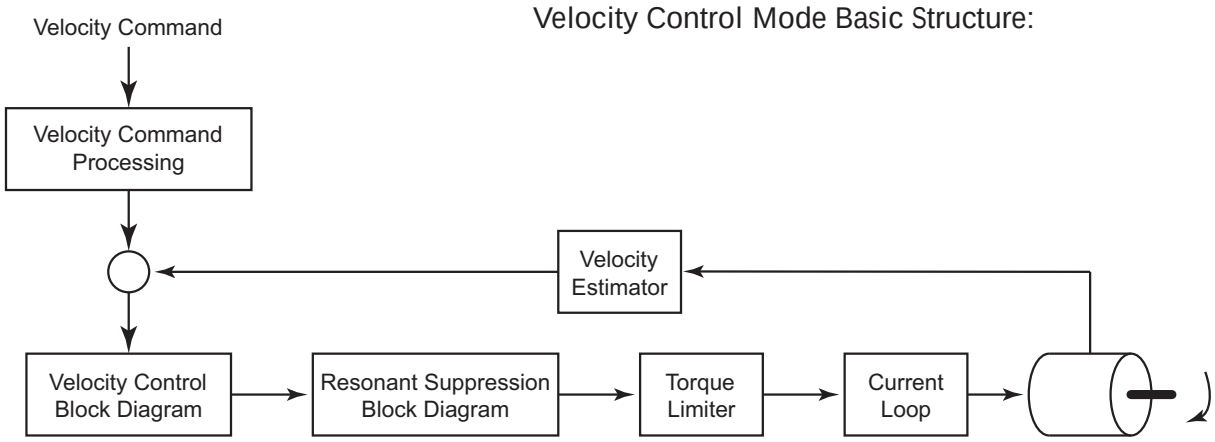

In the figure above, the velocity command processing is used to select the command source of velocity control, including maximum rotation speed of analog velocity command selection (parameter P1-40) and S-curve filter of velocity control. The velocity control block diagram is used to manage the gain parameters of the servo drive, and to calculate the current input supplied to the servo motor. The resonance suppression block diagram is used to suppress the resonance of mechanical system.

The function and structure of velocity command processing is shown as the figure below:

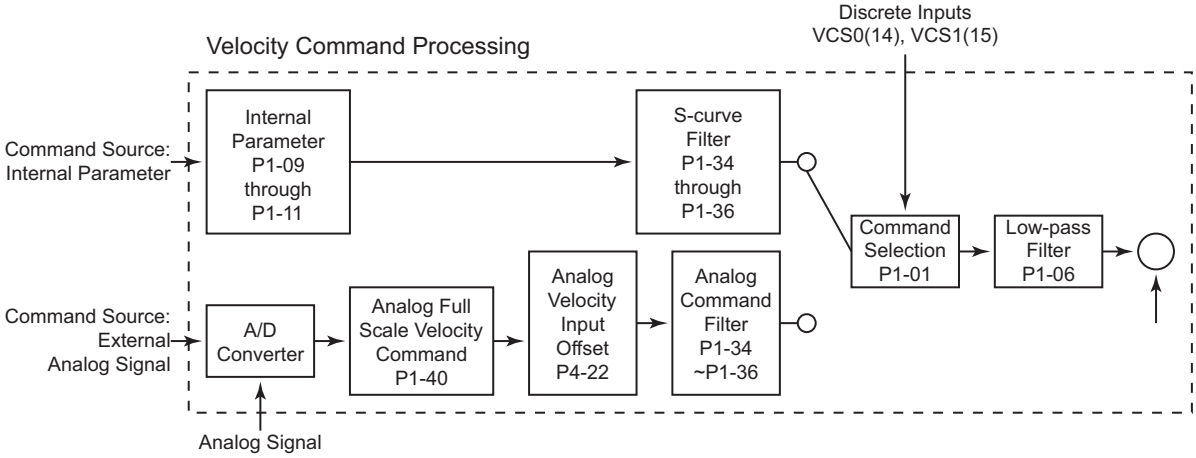

The command source is selected according to the state of VCS0, VCS1 and parameter P1-01 (V or Vz). The S-curve and low-pass filters smooth the transition from one velocity setpoint to another.

Smoothing Strategy of Velocity Control Mode

S-curve Filter and Analog Command Filter

The **S-curve Filter** is a combination of three parameters that can smooth the effects of sudden changes in velocity when a new internal Velocity Command is selected. Using the S-curve filter allows a more gradual output response to sudden command changes. This reduces the mechanical resonance and noise that would otherwise be caused by friction and inertia during sudden velocity changes, and improves the servo motor performance during acceleration, operation, and deceleration.

The parameters that compose the S-curve filter are the Accel/Decel S-curve constant (P1-36), Acceleration Time constant (P1-34), and Deceleration Time constant (P1-35).

If P1-36 is set to zero, the Accel/Decel S-curve function is disabled.

S-curve Characteristics and Time Relationship

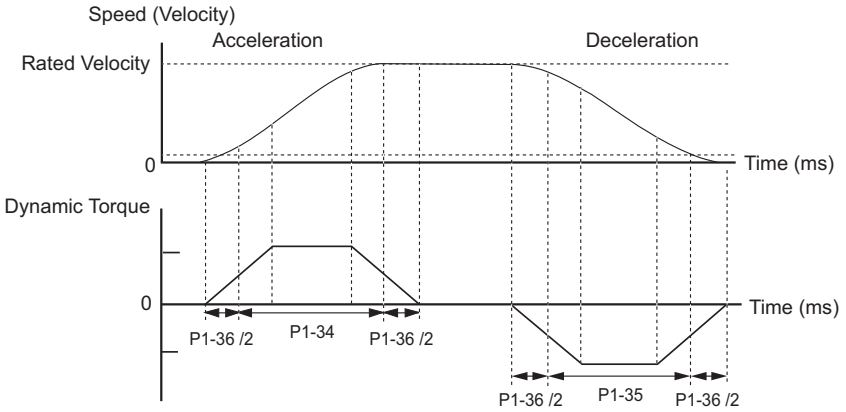

S-curve Characteristics and Time Relationship

Analog Velocity Command Low-pass Filter (AVCLF)

The Analog Velocity Command Low-pass Filter is used to eliminate high frequency response and electrical interference from the analog input signal, and it smoothes the output response regardless of whether the command source is internal or external. The AVCLF consists of the same three parameters as does the S-curve Filter (P1-34, P1-35, P1-36), and also functions similarly to the S-curve Filter.

If P1-06 is set to zero (0), the Analog Velocity Command Low-pass Filter is disabled.

The P1-06 filter smoothes the output response from internal parameter and from analog input command sources.

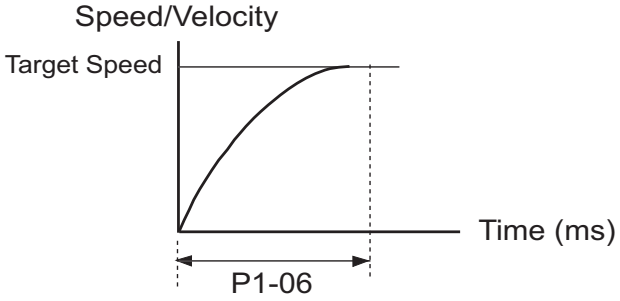

Analog Velocity Input Scaling

The analog voltage between V_REF (analog Velocity Command input) and GND (CN1 pins 12, 13, 19, 44) determines the motor Velocity Command. Parameter P1-40 (Analog Full Scale Velocity Command/Limit) adjusts the velocity control range and the slope of its ramp. For example, when P1-40 is set to 3000, the maximum rotation speed of the analog velocity command (10V) is 3000 rpm, as shown below.

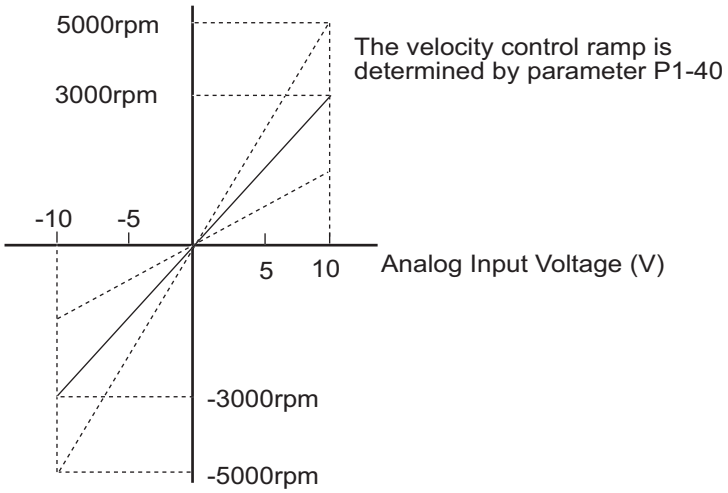

- Velocity Command = ((P1-40)/10) [(Input V) - ((P4-22)/1000)]; Limit ±(P1-40)

P4-22 (Analog Velocity Input Offset) can be used to establish an offset so that zero velocity does not occur at zero input voltage. A 0~10V input can be used for bidirectional control.

Timing Chart of Velocity Control Mode

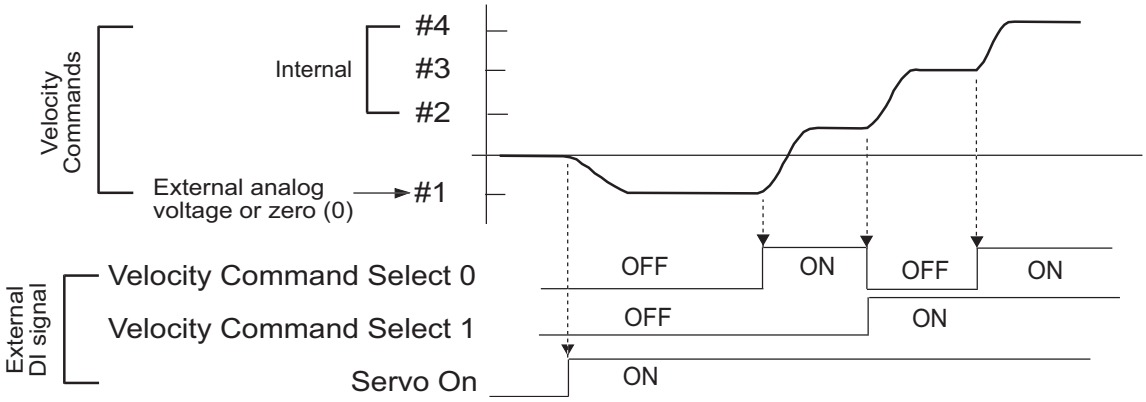

1) When Velocity Control Mode is Vz, the velocity command #1=0.
2) When velocity control mode is V, the velocity command #1 is external analog voltage input.

Velocity Loop Gain Adjustment

The function and structure of velocity control mode is shown below:

Velocity Control Block Diagram

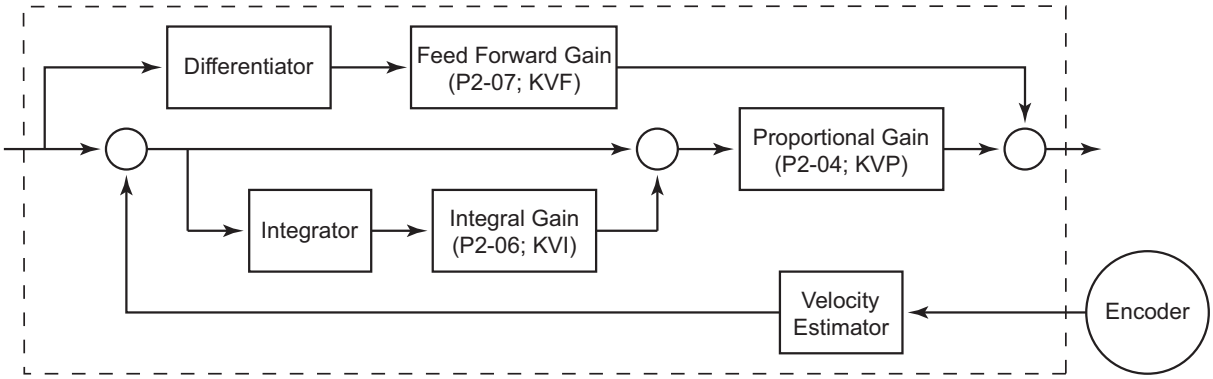

The gain of *Sure*Servo drives can be adjusted using any one of three tuning modes: 1) Manual, 2) Auto, or 3) Easy. Refer to the "Tuning Modes" section of this chapter for more details on these tuning modes.

Resonance Suppression

Resonance of the mechanical system may occur due to excessive system stiffness or frequency response. However, this kind of resonance condition can be improved, suppressed, or even eliminated by using the Low-pass Filter (P2-25) and the Notch Filter (P2-23 & P2-24).

Resonance Suppression Block Diagram

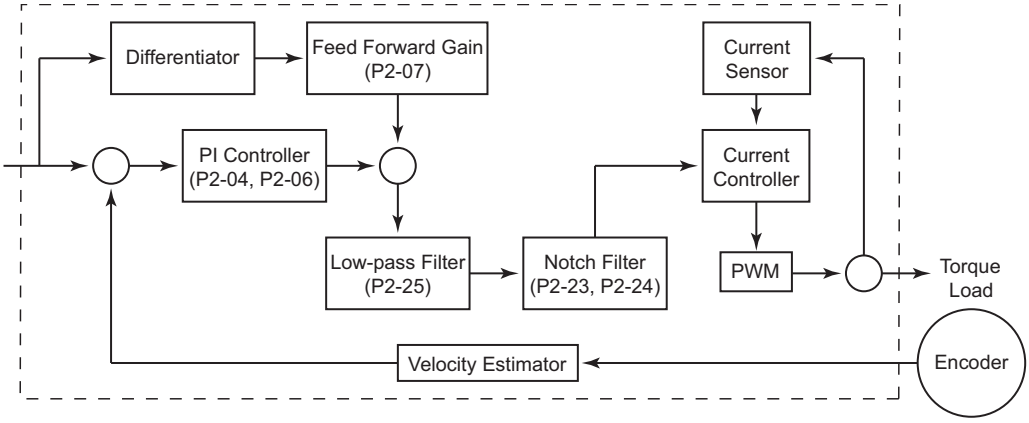

Low-pass Filter

The Low-pass Filter reduces resonance effects which can cause motor vibration. The figure below shows the resonant open loop gain.

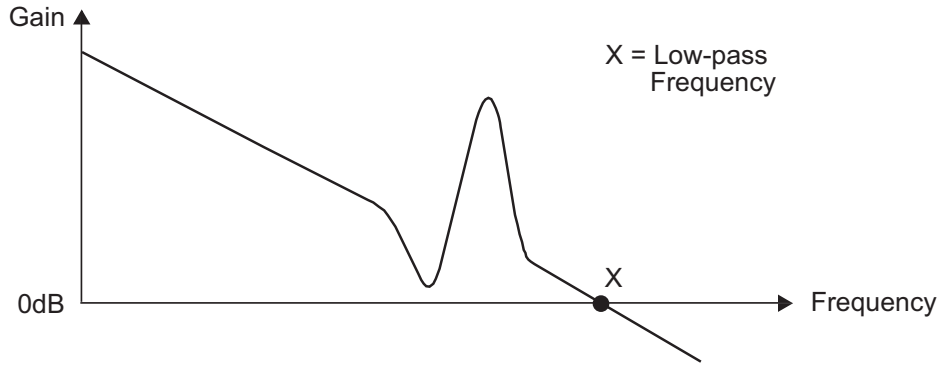

The Low-pass Filter eliminates any response from frequencies above the low-pass frequency. Since the low-pass frequency (X) is inversely proportional to the Low-pass Filter (parameter P2-25), the value of X becomes smaller as P2-25 is increased (see the figure below). The vibration causing resonant condition improves; however, the frequency response and phase margin decrease.

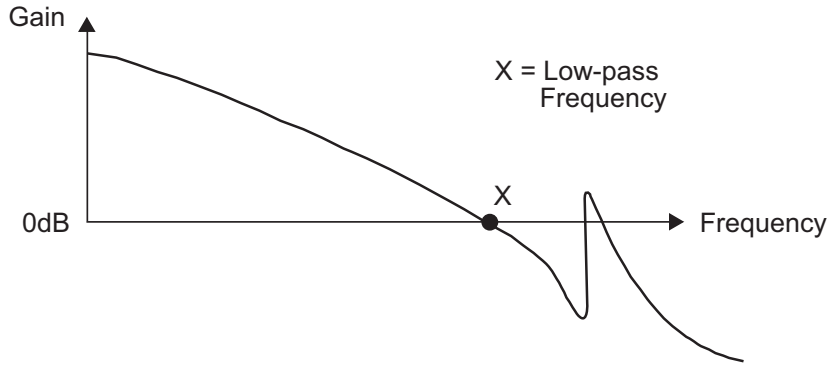

Notch Filter

If the resonant frequency can be determined, then use the Notch Filter (parameters P2-23 & P2-24) to eliminate the resonance, and reduce motor vibration. However, if the resonant frequency is outside of the Notch Filter range (50~1000Hz & 0~32dB), then use the Low-pass Filter to improve the resonance.

To use the Notch Filter, first determine the resonant frequency of the system, and then set P2-23 to that frequency. Then adjust P2-24 upward until resonance is suppressed.

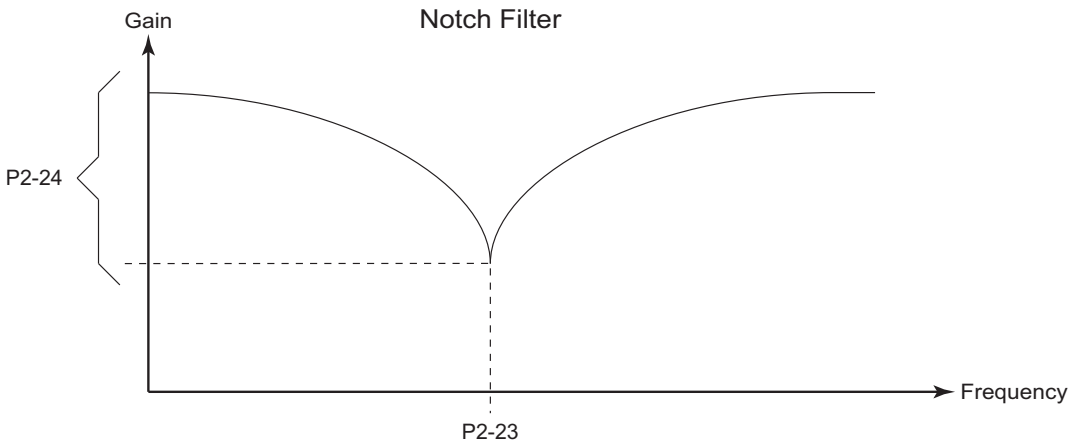

P2-24 should be adjusted only as high as needed to suppress the resonance. An excessive attenuation setting will result in degraded system performance.

Torque Control Mode

The Torque Control Modes (T or Tz) are useful for applications of torque control, such as printing machines, spinning machines, twisters, etc. The *Sure*Servo drive supports two types of command sources in the Torque Control mode: (1) external analog signal, and (2) internal parameters. The external analog signal is from an external voltage input on the CN1 connector, and the internal parameters are P1-12 through P1-14.

Command Source of Torque Control Mode

Torque command Source:

1) External analog signal: External analog voltage input, -10V to +10V.
2) Internal parameter: P1-12 through P1-14.

Selection of the torque command source is determined by the CN1 connector digital inputs that are configured as “Torque Command Select 0” (TCS0) and “Torque Command Select 1” (TCS1) as shown below:

Torque Control Mode Command Source

Torque Command	DI Signal		Command Source			Content	Range
	[1] TCS1(17)	[1] TCS0(16)					
Torque #1	0	0	Mode	T	[2] External AI	Voltage T_{ref} to GND	±10V
				Tz	None	Torque Command is 0	0
Torque #2	0	1	Internal parameters			P1-12	±300%
Torque #3	1	0				P1-13	±300%
Torque #4	1	1				P1-14	±300%

Note 1: TCS = “Torque Command Select” DI function; P2-10~P2-17 settings 16 (TCS0) and 17 (TCS1).

Note 2: When using AI torque command, set P4-23 (Analog Torque Input Offset) to trim the signal so that a 0V command results in no motor rotation.

If TCS0=TCS1=0 (OFF), and the control mode is Tz, then the torque command is zero. Therefore, if the analog voltage input is not to be used as the torque command, then the Tz control mode can be used to avoid the zero point drift problem with analog voltage signals. If TCS0 = TCS1 = 0, and the control mode is T, then the torque command is the analog voltage between the T_REF analog input and GND (CN1 pins 12, 13, 19, 44). The setting range of the input voltage is from -10V to +10V, and the corresponding torque is adjustable using parameter P1-41.

1) *When TCS0 and TCS1 change, the new torque command takes affect immediately.*
2) *The P1-12~P1-14 Torque Commands are used as Torque Limit commands in both position and velocity control modes (Pr, Pt, V, and Vz).*

Structure of Torque Control Mode

Basic Structure:

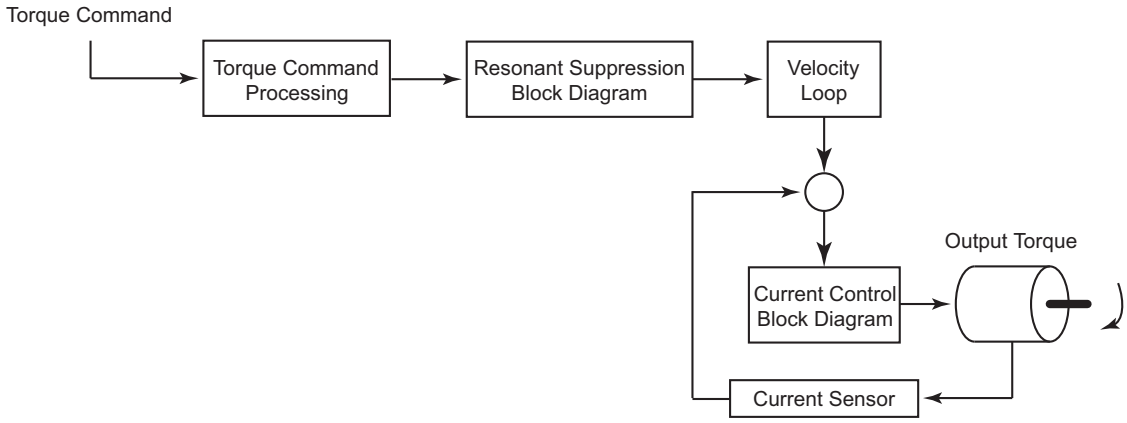

In the figure above, the Torque Command processor is used to select the command source of torque control as described in the previous and following sections, including the Analog Full Scale Torque Command (P1-41), and the smoothing strategy of the torque control mode. The current control block diagram is used to manage the gain parameters of the servo drive and to instantaneously calculate the current input provided to motor.

The function and structure of torque command processing is shown below:

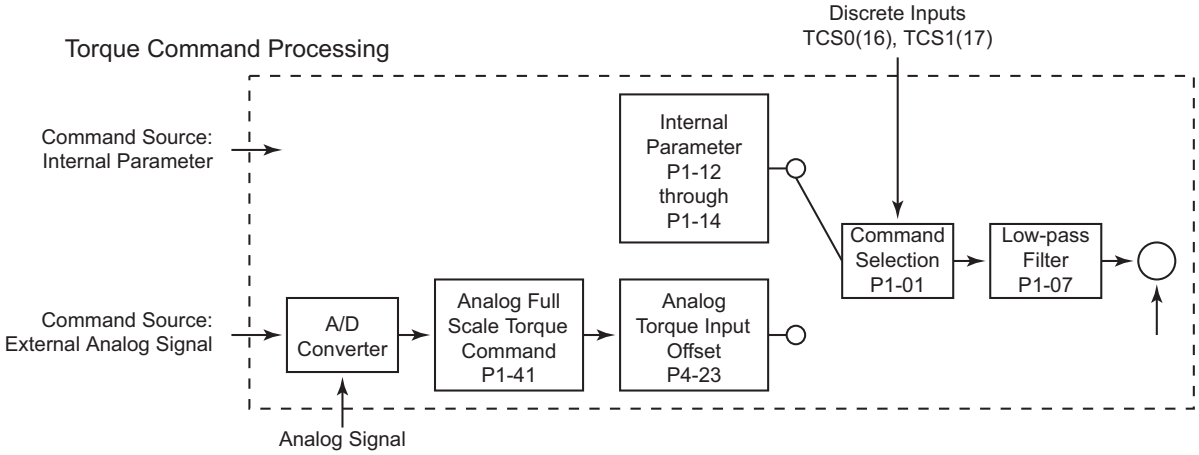

Smoothing Strategy of Torque Control Mode

The P1-07 Analog Torque Command Low-pass Filter smoothes the incoming analog torque command.

If P1-07 is set to zero, the smoothing function is disabled.

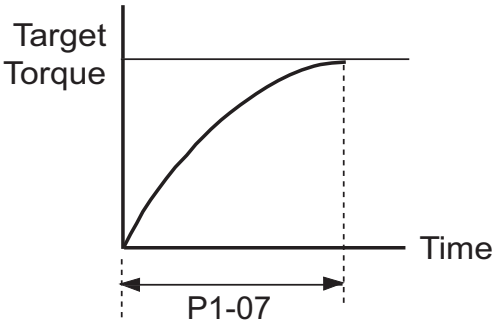

Analog Torque Input Scaling

The analog voltage between the T_REF terminal (analog Torque Command input) and GND (CN1 pins 12, 13, 19, 44) determines the motor Torque Command. Parameter P1-41 (Analog Full Scale Torque Command/Limit) adjusts the torque control ramp and its range. For example, when P1-41 is set to 100, the maximum torque of the analog torque command (10V) is 100% of rated torque, as shown below. If the input voltage decreases to 5V, then the analog torque command decreases to 50% of rated torque.

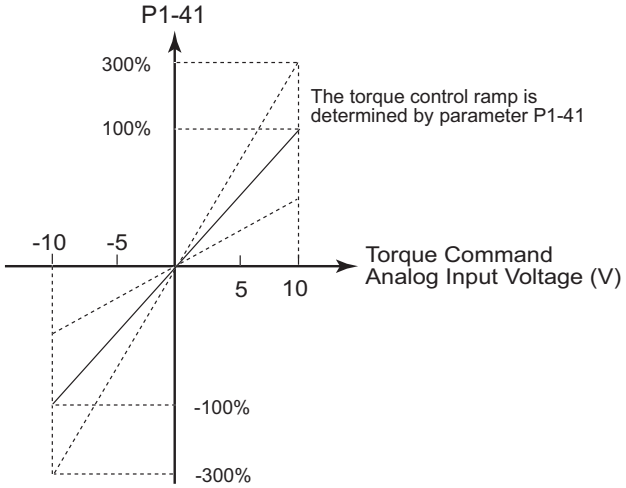

- Torque Command = ((P1-41)/10) [(Input V) - ((P4-23)/1000)]; Limit ±(P1-41)

P4-23 (Analog Torque Input Offset) can be used to establish an offset so that zero torque does not occur at zero input voltage. A 0~10V input can be used for bidirectional control.

Timing Chart of Torque Control Mode

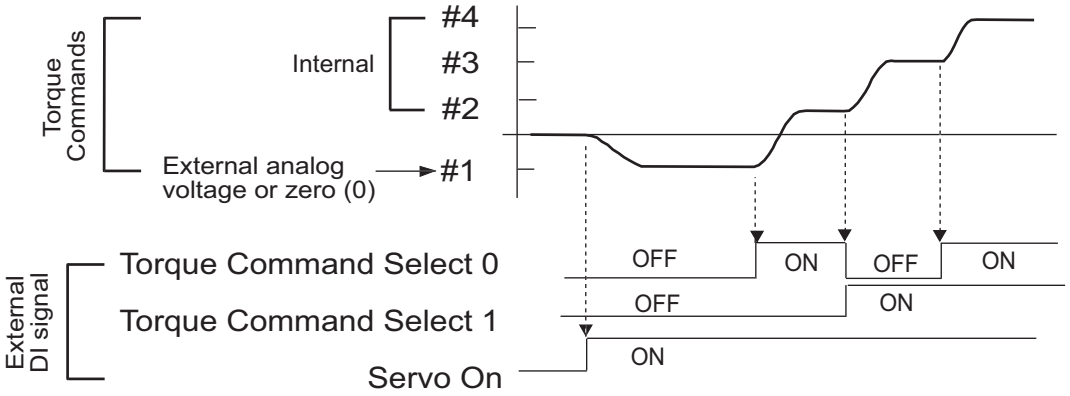

1) When Torque Control Mode is Tz, the torque command #1=0.
2) When Torque Control Mode is T, the torque command #1 is external analog voltage input.

Dual Control Modes Selection

The dual control modes allow *Sure*Servo systems to switch between pre-determined control modes while the servo is enabled. For example, if an application requires both Velocity control and Torque control, P1-01 can be set to 10 to allow a digital input to select between these two control modes. The available dual modes are shown below:

Selection of Dual Control Modes				
	Modes Available	P1-01 Setting	DI Setting P2-10~P2-17	Description
Dual Mode	Pt-V	06	18	Either V or Pt control mode selected by DI (0=V; 1=Pt)
	Pt-T	07	20	Either T or Pt control mode selected by DI (0=T; 1=Pt)
	Pr-V	08	18	Either V or Pr control mode selected by DI (0=V; 1=Pr)
	Pr-T	09	20	Either T or Pr control mode selected by DI (0=T; 1=Pr)
	V-T	10	19	Either V or T control mode selected by DI (0=V; 1=T)
Note: If a digital input is not configured for the Mode Select function, the default mode (0) in each dual mode will be used.				

Position / Velocity Control Mode Selection

Pt-V Mode / Pr-V Mode:

The command source of Pt-V mode is defined from external digital inputs. The command source of Pr-V mode is from the internal Position Command parameters P1-15 through P1-30. The velocity command can be the external analog voltage input (AI) or the internal Velocity Command parameters P1-09 to P1-11.

The velocity and position mode switching is controlled by the Position/Velocity Mode Select (PVMS) DI signal. The selection will be more complicated when the position of Pr-V mode and velocity command are both selected through DI signals.

The timing chart of position/velocity control mode selection is shown below:

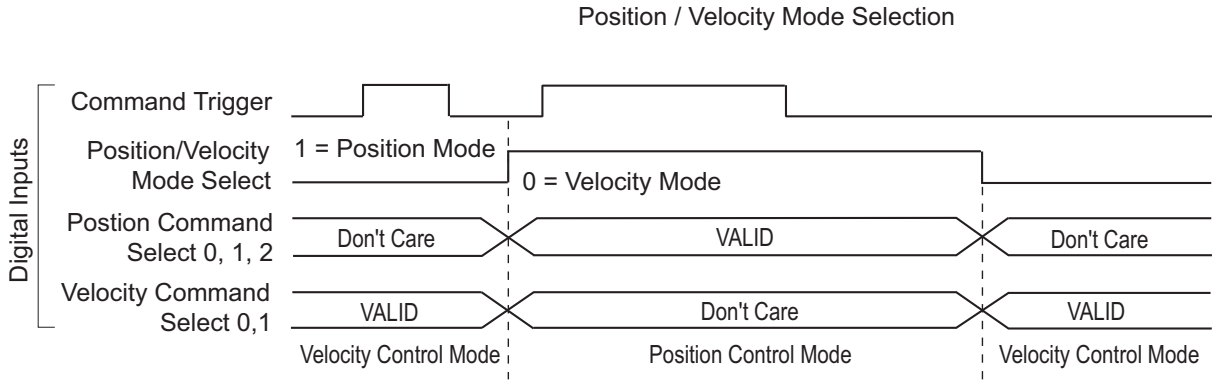

When the PVMS DI is OFF, the drive is in Velocity Mode. The velocity command is then selected by the Velocity Command Select DI, and the Command Trigger is ignored.

When the PVMS DI switches to ON, the drive switches to Position Mode. In this mode, the position command is not determined until there is a rising edge of the Command Trigger DI, so the motor stops running. When the drive receives a rising edge of the Command Trigger DI, the Position Command is selected by the Position Command Select DI, and the motor immediately moves to the determined position.

When the PVMS DI switches back to OFF, the drive immediately switches back to Velocity Mode. For more information regarding the relationships between the DI signals and selected commands in each mode, refer to the particular single mode sections of this chapter.

Position / Torque Control Mode Selection

Pt-T Mode / Pr-T Mode:

The position command source of Pt-T mode is from external digital inputs. The position command source of Pr-T mode is from the internal Position Command parameters P1-15 through P1-30. In both modes, the torque command can be the external analog Torque Command signal, or the internal Torque Command parameters P1-12 through P1-14.

The position and torque mode switching is controlled by the Position/Torque Mode Select (PTMS) DI signal. The selection will be more complicated when the position of Pr-T mode and torque command are both selected through DI signals.

The timing chart of position/torque control mode selection is shown below:

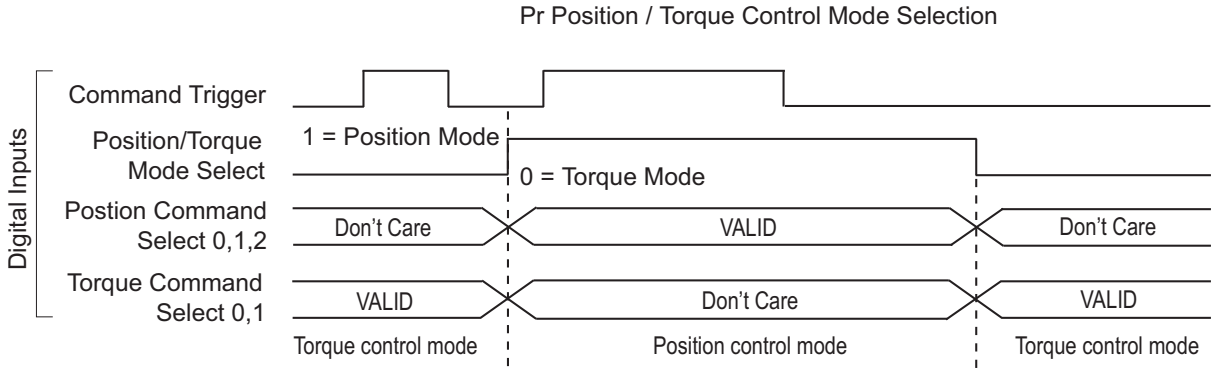

When the PTMS DI is OFF, the drive is in Torque Mode. The torque command is then selected by the Torque Command Select DI, and the Command Trigger is disabled.

When the PTMS DI switches to ON, the drive switches to Position Mode. In Pr-T mode, the position command is not determined until there is a rising edge of the Command Trigger DI, so the motor stops running. When the drive receives a rising edge of the Command Trigger DI, the Position Command is selected by the Position Command Select DI, and the motor immediately moves to the determined position. In the Pt-T mode, the drive immediately responds to any high speed pulse inputs.

When the PTMS DI switches back to OFF, the drive immediately switches back to Torque Mode. For more information regarding the relationships between the DI signals and selected commands in each mode, refer to the particular single mode sections of this chapter.

Velocity / Torque Control Mode Selection

V-T Mode:

In the Velocity Mode, the velocity command can be the external analog voltage input (AI), or it can be the internal Velocity Command parameters (P1-09 to P1-11) combined with the Velocity Command Select DI.

Similarly, in the Torque Mode, the torque command can be the external analog voltage input (AI), or it can be the internal Torque Command parameters (P1-12 to P1-14) combined with the Torque Command Select DI.

The Velocity/Torque Mode Select (VTMS) DI switches the drive between the velocity and torque modes.

The timing chart of velocity/torque control mode selection is shown below:

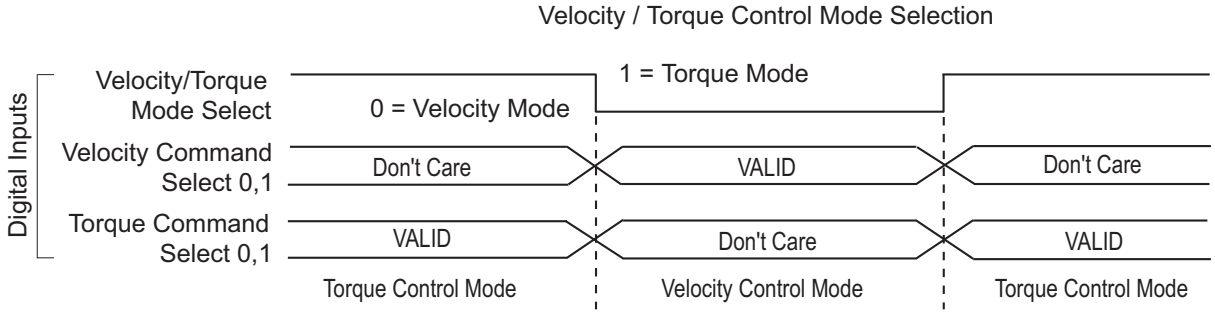

When the VTMS DI is ON, the drive is in Torque Mode, and the torque command is then selected by the Torque Command Select DI.

When the VTMS DI switches to OFF, the drive switches to Velocity Mode. In this mode, the velocity command is selected by the Velocity Command Select DI, and the motor rotates immediately following the command.

When the VTMS DI switches to back to ON, the drive immediately switches back to Torque Mode. For more information regarding the relationships between the DI signals and selected commands in each mode, refer to the particular single mode sections of this chapter.

Limits

Velocity Limit

The maximum velocity can be limited by using parameter P1-55 (Maximum Velocity Limit) in ALL control modes.

The velocity limit only can be used in torque mode (T mode) to limit the servo motor velocity. When the torque command is the external analog voltage input, there should be surplus DI signals that can be configured as Velocity Command Select inputs used to select Velocity Limits (P1-09~P1-11). If there are not enough DI signals, then the external voltage input can be used as Velocity Limit. When the setting value of the least significant digit in P1-02 is set to 1, the Velocity Limit function is activated.

The timing chart of Velocity Limit is shown below:

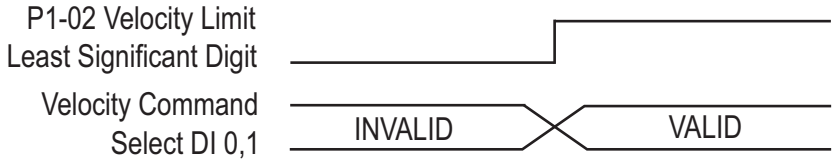

Command Source Selection of Velocity Limit

Torque Limit

The torque limit only can be used in Position Mode (Pt and Pr modes) and Velocity Mode (V mode) to limit the output torque of the servo motor. When the position and velocity commands are the external analog voltage input, there should be surplus DI signals that can be configured as Torque Command Select inputs used to select Torque Limits (P1-12~P1-14). If there are not enough DI signals, then the external voltage analog input can be used as Torque Limit. When the setting value of the second least significant digit in P1-02 is set to 1, the Torque Limit function is activated.

The timing chart of Torque Limit is shown below:

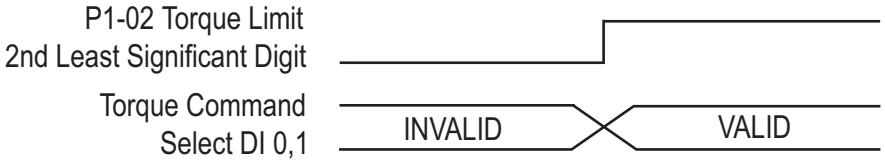

Command Source Selection of Torque Limit

Regenerative Resistor

Built-in Regenerative Resistor

At the point where the load starts driving the servo motor, instead of vice-versa, the motor becomes a generator instead of a motor. The servo systems needs to dissipate the extra energy that is being generated, and it does that through a regenerative resistor. *Sure*Servo drives provide a built-in regenerative resistor, and have the capability to connect an external resistor in case more regenerative capacity is needed.

The following table shows the specifications of the servo drive's built-in regenerative resistor and the amount of regenerative power (average value) that it can process.

Built-in Regenerative Resistor Specifications				
Drive Model	**Resistance (Ohm) [Set P1-52]**	**Capacity (Watt) [Set P1-53]**	**Regenerative Power * (Watt)**	**Min. Allowable Resistance (Ohm)**
SVA-2040	40	60	30	20
SVA-2100	40	60	30	20
SVA-2300	20	120	60	10

** Regenerative Power Calculation: The amount of regenerative power (average value) that can be processed is rated at 50% of the capacity of the servo drive's built-in regenerative resistor. The regenerative power calculation method of external regenerative resistor is the same.*

External Regenerative Resistor

When the regenerative power exceeds the processing capacity of the servo drive, install an external regenerative resistor. Please pay close attention on the following notes when using a regenerative resistor:

1) External resistors are available from AutomationDirect. Refer to next page for part #s.
2) Confirm that the settings of resistance (P1-52) and capacity (P1-53) are set correctly.
3) When installing an external regenerative resistor, ensure that its resistance value is the same as the resistance of built-in regenerative resistor. If combining multiple small-capacity regenerative resistors in parallel to increase the regenerative resistor capacity, make sure that the parallel resistance value of the regenerative resistors complies with the specifications listed in the table above.

WARNING: In general, when the amount of regenerative power (average value) that can be processed is used at or below the rated load ratio, the resistance temperature will increase to 120°C or higher (on condition that when the regeneration continuously occurred). For safety reasons, forced air cooling is good way to reduce the temperature of the regenerative resistors. We also recommend that you use regenerative resistors with thermal switches. For the load characteristics of the regenerative resistors, please check with the manufacturer.

External Regenerative Resistor (continued)

When using an external regenerative resistor, connect it to drive terminals P and C, and make sure that the circuit between P and D is open. (Refer to the "Installation and Wiring" chapter for basic wiring diagrams.) Use an external regenerative resistor that meets the specifications in the "Built-in Regenerative Resistor Specifications" table.

External Resistor Method Without Load:

Select the adequate regenerative resistors according to the allowable frequency required by actual operation, and the allowable frequency when the system is run without a load. The allowable frequency when the system is run without a load is the maximum number of times per minute during continuous operation that the servo motor can accelerate from a stop to rated speed and then decelerate back down to a stop. The allowable frequencies when the system is run without a load are summarized in the following table:

Allowable Frequencies for Servo Motor Running Without Load	
Drive Model	**Frequency of Accel & Decel Cycles (times/min)**
SVA-2040	1071
SVA-2100	140
SVA-2300	63

Select the adequate regenerative resistors according to the allowable frequencies by referring to the table below:

Allowable Frequencies for Servo Motor Running Without Load When Using External Regenerative Resistor		
Drive Model	**Automation Direct External Resistor**	**Frequency of Accel & Decel Cycles (times/min)**
SVA-2040	GS-25P0-BR	2247
SVA-2100	GS-2010-BR-ENC	1014
SVA-2300	GS-2010-BR-ENC	140

External Resistor Method With Load:

When the system is run with a load, the allowable frequencies will change according to the the load inertia and rotation speed. Use the following equation to calculate the allowable frequency:

- Allowable Frequency =
  [(Allow Freq w/o Load) / (m+1)] x [(Rated Speed) / (Operating Speed)] times/min

Where:
m = load/motor inertia ratio

Electromagnetic Brake

Some *Sure*Servo motors (part # SVx-xxxB) have an internal spring-loaded holding brake. These brake motors are generally used in applications where the load needs to be held up opposite the force of gravity, or needs to be held tight when power is removed from the system.

To control the brake in a brake motor, a digital output MUST be configured to control the brake (P2-18~P2-22 set to 08; Electromagnetic Brake Control), and that output should be used to activate an interposing 24 Vdc control relay with contacts rated to withstand at least 1A. Use a surge suppressor across the relay coil to protect the drive output. The servo drive VDD 24V power source can be used to power the relay coil, but do NOT use VDD to power the servo motor brake coil. For complete wiring information, refer to the electromagnetic brake diagrams in the "CN1 Input/Output Wiring Diagrams" section of the "Installation and Wiring" chapter of this manual.

There are two parameters that affect the brake operation. Parameter P1-42 is used to set the time window between when current is applied to the motor and when the brake releases. Parameter P1-43 is used to set the time window between when the brake is engaged and when the servo current is removed from the motor.

If users desire to control the electromagnetic brake by an external controller, instead of by the servo drive, users must execute the function of electromagnetic braking during the time when the servo motor is braking.

Timing chart for using servo motor with electromagnetic brake:

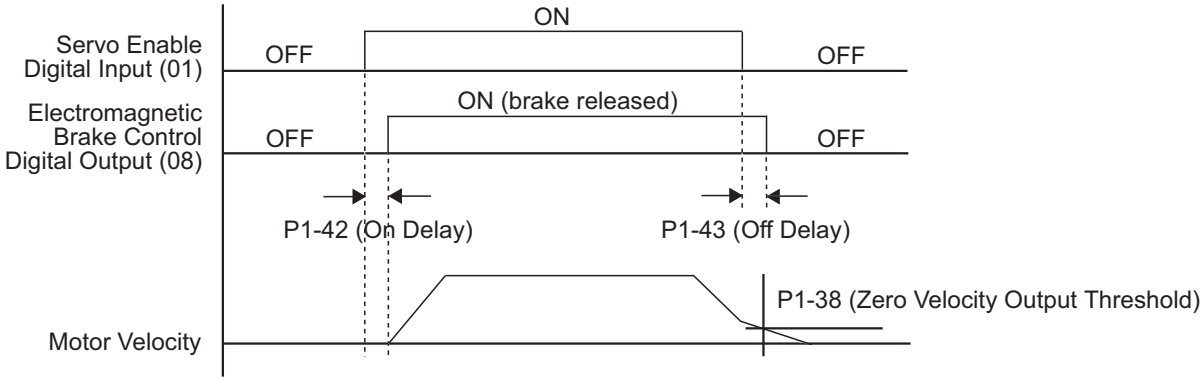

After the Servo Enable DI (P2-10~P2-17 set to 01) is OFF, and then the delay time set by P1-43 is reached, the EBC (Electromagnetic Brake Control) output goes OFF, even if the motor velocity is still higher than the setting value of P1-38.

After the Servo Enable DI (P2-10~P2-17 set to 01) is OFF, if the motor speed is lower than the setting value of P1-38, the EBC (Electromagnetic Brake Control) output goes OFF, even if the delay time set by P1-43 has not been reached.

Timing charts of control circuit power and main circuit power:

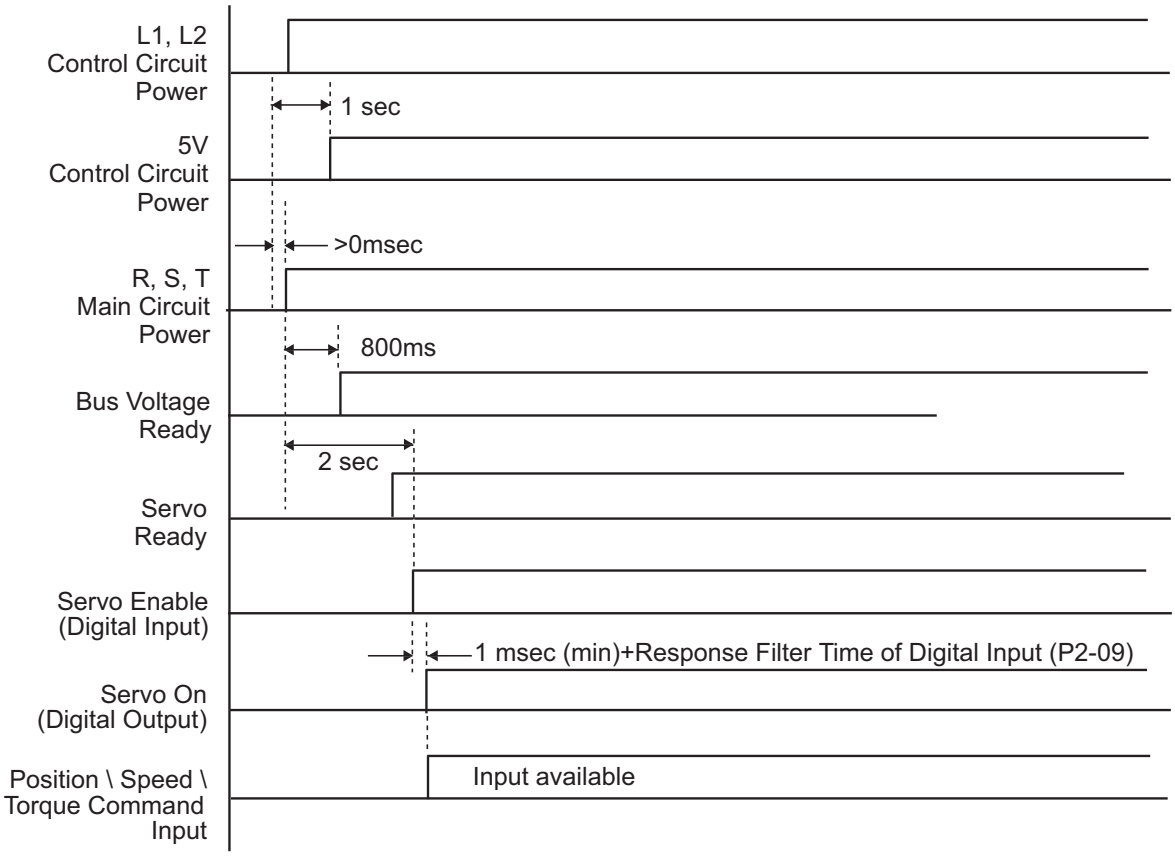

Tuning Modes Overview

Purpose of Tuning; Why and When it is Necessary

What is tuning and why is it necessary? Servo systems essentially operate by reducing the error between the command input and the output to zero. How hard it tries to make the error zero depends on how the system is tuned. Tuning is basically adjusting the servo system's reaction to any given error to achieve a desired response. Mostly in high performance servo system applications, the goals are to have a high **response rate** (also called **bandwidth**) to the error, and to keep the error as small as possible both when running and when at rest. There are, however, many applications that require a slower response, and that an amount of following error always exists while the system is moving. The key to a well tuned system is not that it closes the error margin as quickly as possible, but that it reacts to error as desired by the machine designer.

In general, before the servo system is installed on the machine, test it to make sure that the system runs smoothly when unloaded. If it is runs roughly before it is installed and loaded, there is very little chance that the desired performance will be achieved. Following are some procedures and hints on *Sure*Servo tuning methods.

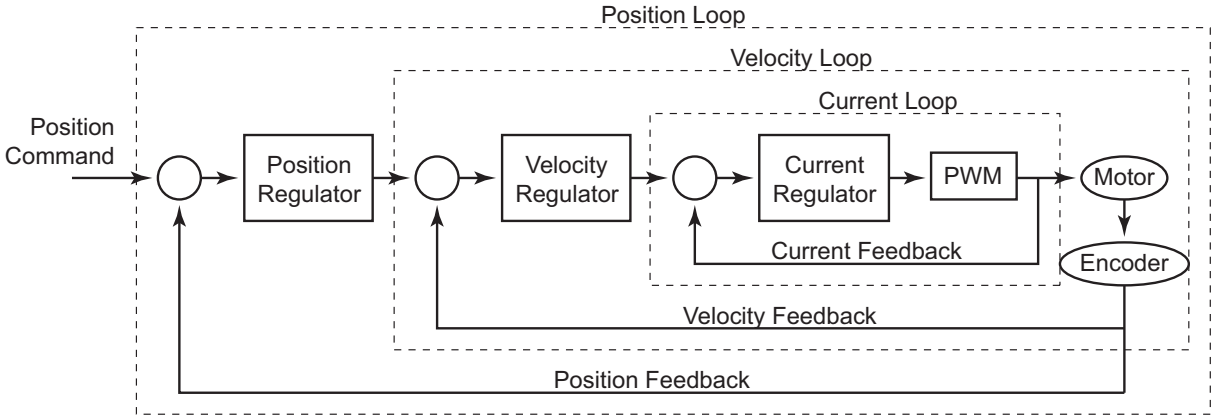

The control loop diagram (above) shows the basics of how the servo drive controls the load. As shown, there are three major parts to a servo control system: current loop, velocity loop, and position loop. **Tuning is required only on position and velocity control loops.** The current loop does not require any user interaction except to select the proper motor (P1-31), and is set at a fixed **bandwidth (BW)** of 1.8kHz. If the wrong motor is selected, then the performance of the current loop will not be optimal and could ultimately cause damage to the motor. The output of the velocity loop feeds the current loop. The bandwidth of the velocity loop is adjustable up to 450Hz. The position loop output feeds the velocity loop and the bandwidth is adjustable up to 300Hz. As you can see, the current loop is the most responsive in order to process and correct the error being fed by the velocity loop. With the velocity loop at the highest BW setting, the current loop is still four times faster in order to keep the system stable. The velocity should always be more responsive than the position loop as well. Think of it this way, if the position loop updated the velocity loop faster than the velocity loop could correct the error, then the system has no choice but to become unstable.

The inner loops MUST always be faster (higher BW) than the loop that is feeding it.

*Sure*Servo™ Tuning Modes Available

*Sure*Servo™ servo systems have a choice of three types of tuning modes to suit your application; manual, auto, and easy tuning modes. Parameter P2-32 selects the tuning mode, and a general description of each one can be found below:

Manual Tuning Mode (P2-32 = 0):
This is a common tuning mode available in most servo systems. It is intended for use by experienced users who are familiar with loop gains and their effects on the system. No automatic adjustments are made by the system.

Easy-Tune Mode (P2-32 = 1):
Although this mode is not common to other name brand systems, it is available in *Sure*Servo servo systems. This mode is used when the mismatch ratio J_{Load}/J_{Motor} is higher than the preferred ratio of 10:1 or lower, or when the mismatch ratio has a wide range. Easy-Tune is used primarily to keep the system stable under a wide range of inertia mismatches, and is recommended for loads with varying inertias. The user sets the required stiffness of the system based on the mismatch ratio, and the system makes adjustments to the tuning loops accordingly.

Adaptive Auto-Tune Modes (P2-32 = 2 or 4):
These modes should be used when the load inertia is not known. These modes allow the system to determine the load inertia and continuously monitor it for changes, and should be used only when the load varies over a small range. Users adjust the level of responsiveness based on the system requirements. Mode 2 (P2-32 = 2) uses a PI (Proportional-Integral) tuning method, and Mode 4 uses a PDFF (Pseudo-Derivative Feedback and Feedforward) tuning method.

Fixed Auto-Tune Modes (P2-32 = 3 or 5):
These modes are used when the load inertia is known and the mismatch ratio can be determined. These modes use the fixed inertia information and automatically adjust tuning loops, and should be used only when the load varies over a small range. Users adjust the level of responsiveness based on the system requirements. Mode 3 (P2-32 = 3) uses a PI (Proportional-Integral) tuning method, and Mode 5 uses a PDFF (Pseudo-Derivative Feedback and Feedforward) tuning method.

Using Multiple Tuning Modes:
A common method of tuning a new machine with a rigidly coupled fixed load is use the default tuning mode (P2-32 = 4) to let the system determine the load inertia. Then the tuning mode can be changed to one of the non-adaptive modes (P2-32 = 0, 2, or 5) to further tune the system manually, if required.

Tuning Modes and Their Relevant Parameters

Tuning Modes and Their Relevant Parameters (Table 6-1)				
Tuning Mode	**P2-32**	**Parameters Set by System**	**Parameters set by User**	**Gain Values**
Manual	0	None	P2-00 Proportional Position Loop Gain (KPP) P2-06 Velocity Loop Proportional Gain (KVP) P2-25 Low-pass Filter (Resonance Suppression)	Fixed
Easy-Tune	1	P2-04 P2-06 P2-26	P2-31 Stiffness Level P2-00 Proportional Position Loop Gain (KPP) P2-25 Low-pass Filter (Resonance Suppression)	Fixed
Auto-Tune PI (Adaptive)	2	P2-00 P2-04 P2-06	P2-31 Responsive Level P2-25 Low-pass Filter (Resonance Suppression)	Continuous Adjusting
Auto-Tune PI (Fixed Inertia)	3	P2-00 P2-04 P2-06	P1-37 Inertia Mismatch Ratio P2-31 Responsive Level P2-25 Low-pass Filter (Resonance Suppression)	Fixed
Auto-Tune PDFF (Adaptive)	4	P2-00 P2-04 P2-06 P2-25 P2-26	P2-31 Responsive Level	Continuous Adjusting
Auto-Tune PDFF (Fixed Inertia)	5	P2-00 P2-04 P2-06 P2-25 P2-26	P1-37 Inertia Mismatch Ratio P2-31 Responsive Level	Fixed

Monitoring System Performance

There are tools available to assist in examining system responses while tuning: two analog monitor outputs available on I/O terminal CN1, and *Sure*Servo Pro configuration software available for download. As you change tuning parameters, you can witness the effects in real time using one of these methods. The analog monitor outputs are used by connecting an oscilloscope and capturing the waveforms for review. (The “Installation and Wiring” chapter contains information regarding terminal CN1 and these analog outputs.) Use parameters P0-03, P1-03, P1-04, and P1-05 to configure the analog monitors. Refer to the “*Sure*Servo Drive Parameters” chapter for detailed information regarding the configuration of these parameters.

For example, to observe the analog voltage command signal in channel 1 scaled to 8V per 325kpps, set the value of P1-04 (Analog Monitor Output Scaling 1 (ch1)) to 50. Another related monitor parameter is P0-03 which is used to set the monitor polarity of both channels. These monitors have 10 bit resolution (approx 15.6 mV per bit).

*Sure*Servo Pro software has a real-time scope that displays data received from the drive. This software receives data from the drive via the serial link and compiles it in a scaled output display on your PC. You can print the results to your printer or store them to disk for review later.

Either monitoring method is a good tool to assist with the tuning process.

Tuning Modes Details

Auto-Tuning Modes

There are two modes of auto-tuning available for use in the *Sure*Servo systems: **Adaptive** and **Fixed**. The Adaptive modes continuously monitor the load and determine the inertia mismatch ratio so the system tunes itself based on a response level set by the user. The Fixed modes tune the system based on a fixed inertia mismatch ratio and response level entered by the user. The response level is adjusted using parameter P2-31.

There are two types of tuning methods in both Adaptive modes and Fixed modes of auto-tuning: **PI** method and **PDFF** method. The differences in the control methodology are shown below:

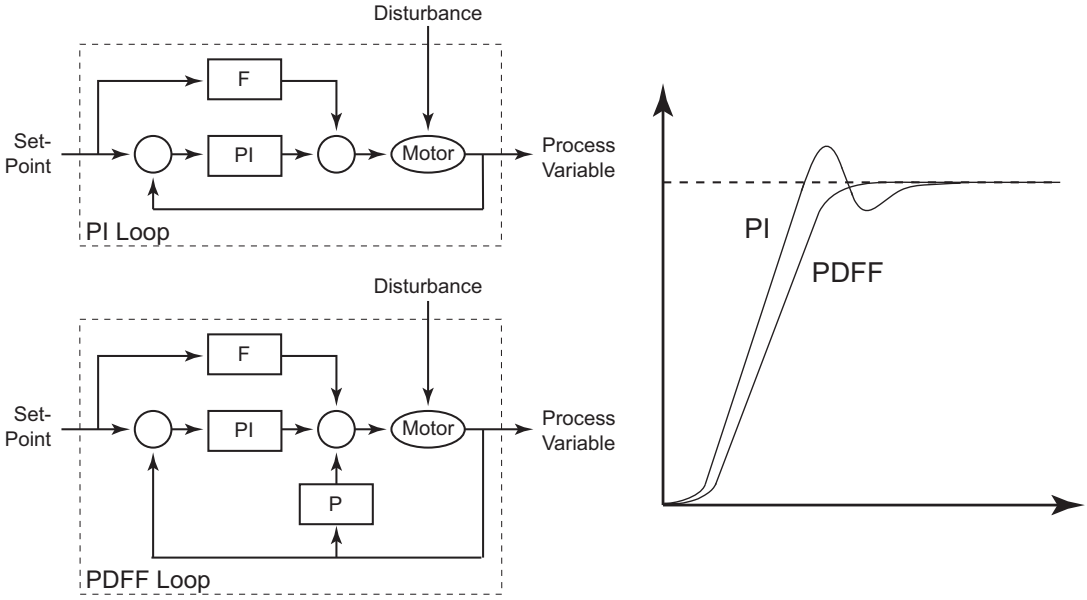

The graph shows a relative difference between PI and PDFF step responses given the same input. In general, the PDFF control method includes additional feedback into the system to reduce following error. The PI method has a few more adjustments available to the user than does the PDFF method

Table 6-2 shows the responsive level with respect to the settings in parameter P2-31. Essentially, the lower the setting in P2-31, the lower the bandwidth (less responsive), and the higher the setting, the higher the bandwidth (more responsive).

Velocity Loop Response Settings for Both Auto-Tune Modes (Table 6-2)		
P2-31 Auto-Tune Response	**Responsiveness in Auto-Tune PI Tuning Mode**	**Responsiveness in Auto-Tune PDFF Tuning Mode**
0	20Hz	20Hz
1	30Hz	30Hz
2	40Hz	40Hz
3	60Hz	50Hz
4	85Hz (Default setting)	60Hz (Default setting)
5	120Hz	70Hz
6	160Hz	80Hz
7	200Hz	100Hz
8	250Hz	120Hz
9	300Hz	140Hz
A	300Hz	160Hz
B	300Hz	180Hz
C	300Hz	200Hz
D	300Hz	220Hz
E	300Hz	260Hz
F	300Hz	300Hz
Note: The settings for the PI method is fixed at 300Hz for P2-31 values of 9~F(hex).		

Using Auto-Tune PI Mode

Below is a flowchart for use as a tuning guideline when using the PI Auto-Tune Mode. In general, increasing the setting of P2-31 increases the responsiveness of the system and reduces noise. Adjust P2-25 (refer to Table 6-3) along with the bandwidth setting of P2-31 to complete the response adjustment. Continuously adjust these two parameters until satisfactory performance is achieved.

Auto-Tune PI Method

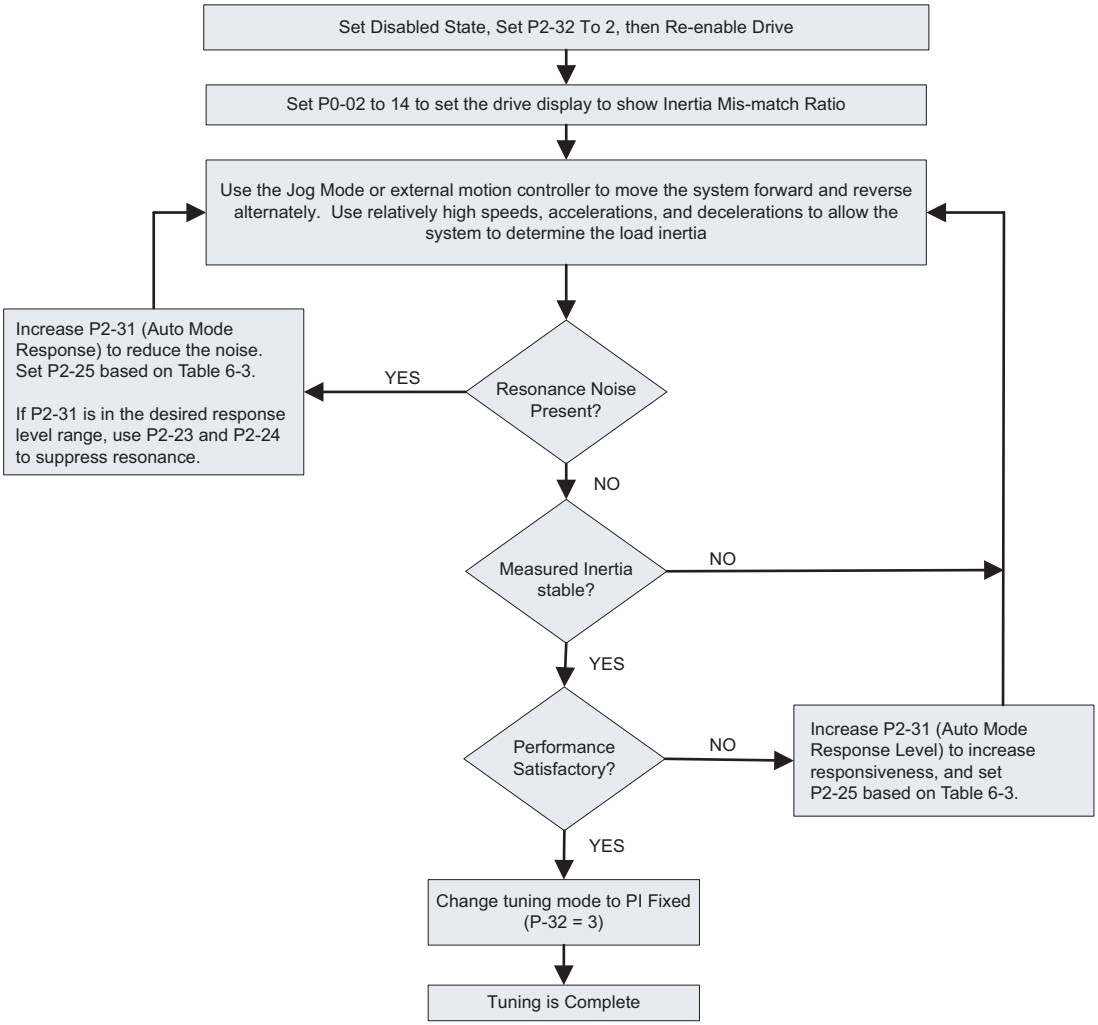

P2-25 Values with respect to Velocity Loop Gain (Auto-Tune PI Modes Only) (Table 6-3)		
P2-31 Auto-Tune Response Setting	**Velocity Loop Response**	**Recommended P2-25 Setting**
0	20Hz	13
1	30Hz	9
2	40Hz	6
3	60Hz	4
4	85Hz	3
5	120Hz	3
6	160Hz	2
7	200Hz	1
8	250Hz	1
9 and above	300Hz	0

Using Auto-Tune PDFF Mode

Below is a flowchart for use as a tuning guideline when using the PDFF Auto-Tune Mode. In general, increasing the setting of P2-31 increases the responsiveness of the system and reduces noise. Adjust this parameter until satisfactory performance is achieved. Table 6-4 (previous page) shows the velocity loop responsiveness for the various setting values of P2-31.

Auto-Tune PDFF Method

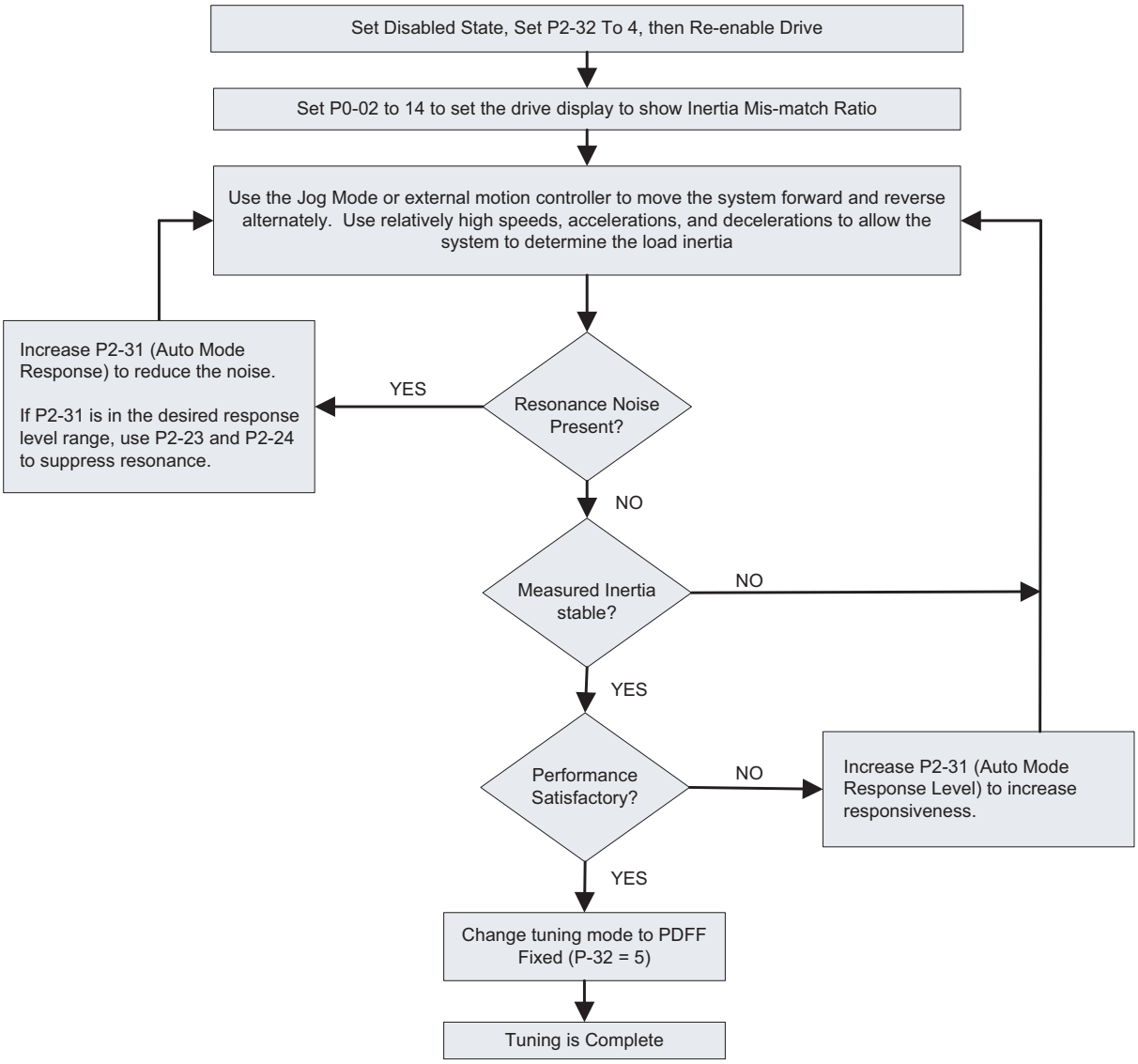

Velocity Loop Response to P2-31 (Auto-Tune PDFF Modes) (Table 6-4)			
P2-31 Auto-tune Response Setting	Velocity Loop Responsiveness	P2-31 Auto-tune Response Setting	Velocity Loop Responsiveness
0	20 Hz	8	120 Hz
1	30 Hz	9	140Hz
2	40 Hz	A	160 Hz
3	50 Hz	B	180 Hz
4	60 Hz	C	200 Hz
5	70 Hz	D	220 Hz
6	80 Hz	E	260 Hz
7	100 Hz	F	300 Hz

Using Easy-Tune Mode

Easy-Tune mode is used on systems that have loads that vary over a relatively wide range. The *Sure*Servo system automatically tunes the system based on a known mismatch ratio. Below is a flowchart for use as a tuning guideline when using the Easy-Tune Mode. The user can simply set the stiffness setting (P2-31 Easy-Tune Response) based on the load, enter a couple of recommended settings, and then fine tune the system based on actual system response. Table 6-5 shows the relationships between Easy-Tune Mode tuning parameters.

Easy-Tune Method

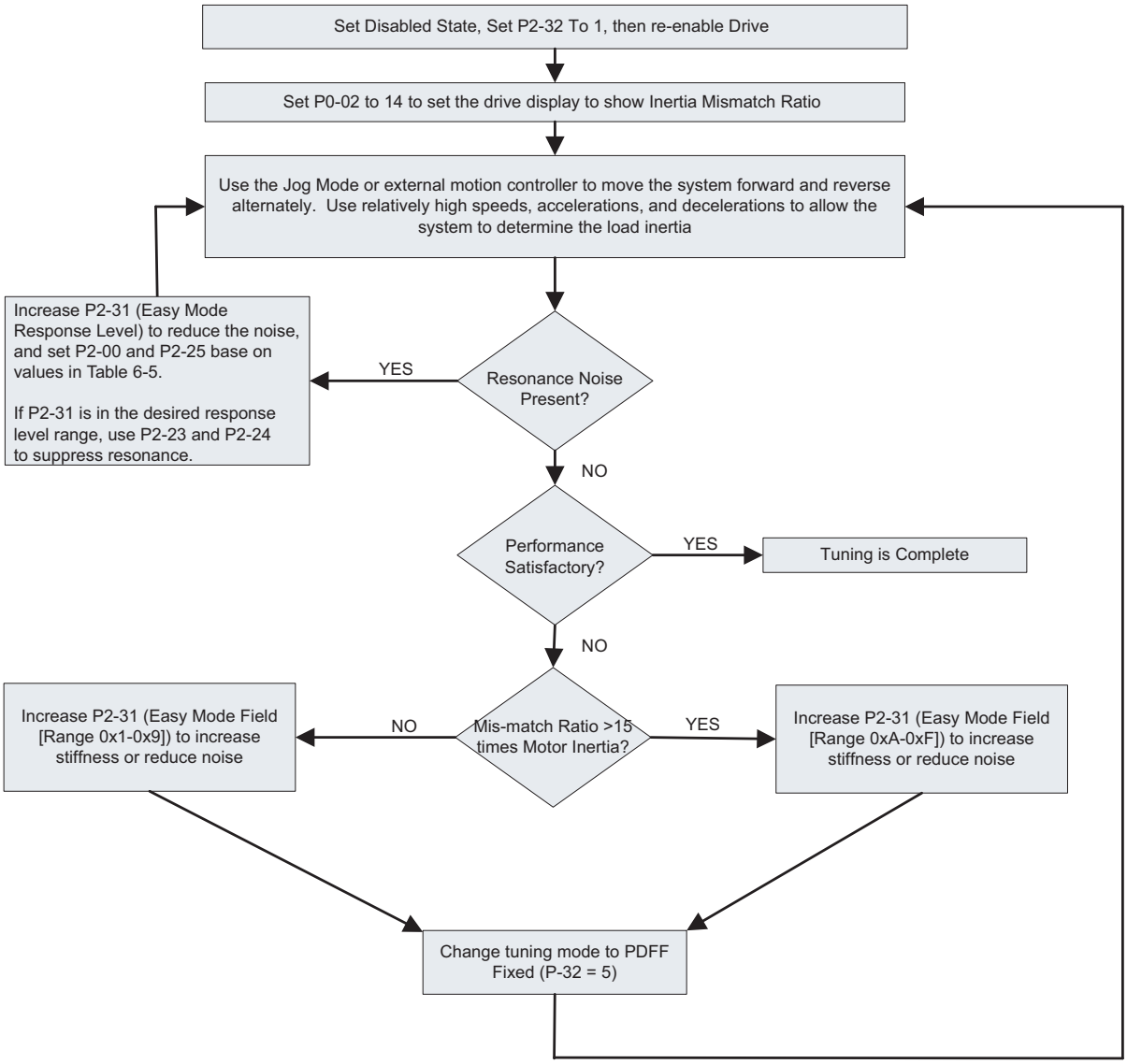

Easy-Tune Parameter Relationships (Table 6-5)					
Responsiveness Level	Easy-Tune Response P2-31	Inertia Mismatch Ratio P1-37	Max Load Corresponding Ratio	Recommended P2-00 Setting	Recommended P2-25 Setting
Low	1	50~100	5Hz	5	50
	2	30~50	8Hz	8	31
	3	20~30	11Hz	11	33
	4	16~20	15Hz	15	16
Medium	5	12~16	20Hz	20	12
	6	8~12	27Hz	27	9
	7	5~8	40Hz	40	6
	8	2~5	60Hz	60	4
	9	0~2	115Hz	115	2
High	A	0~2	127Hz	127	1
	B	2~8	103Hz	103	2
	C	8~15	76Hz	76	3
	D	15~25	62Hz	62	4
	E	25~50	45Hz	45	5
	F	50~100	36Hz	36	6
Note: The values of P2-00 and P2-25 must be entered manually.					

Using Manual Tuning Mode

Manual tuning mode is generally used when fine tuning of the system is required. This mode should be used only by experienced users familiar with general servo system theories. The *Sure*Servo system does not automatically change any parameters in this mode. Below is a flowchart for use as a guideline when using the Manual Tuning Mode for both Position and Velocity control modes.

Manual Position Mode

Manual Tuning - Position Mode

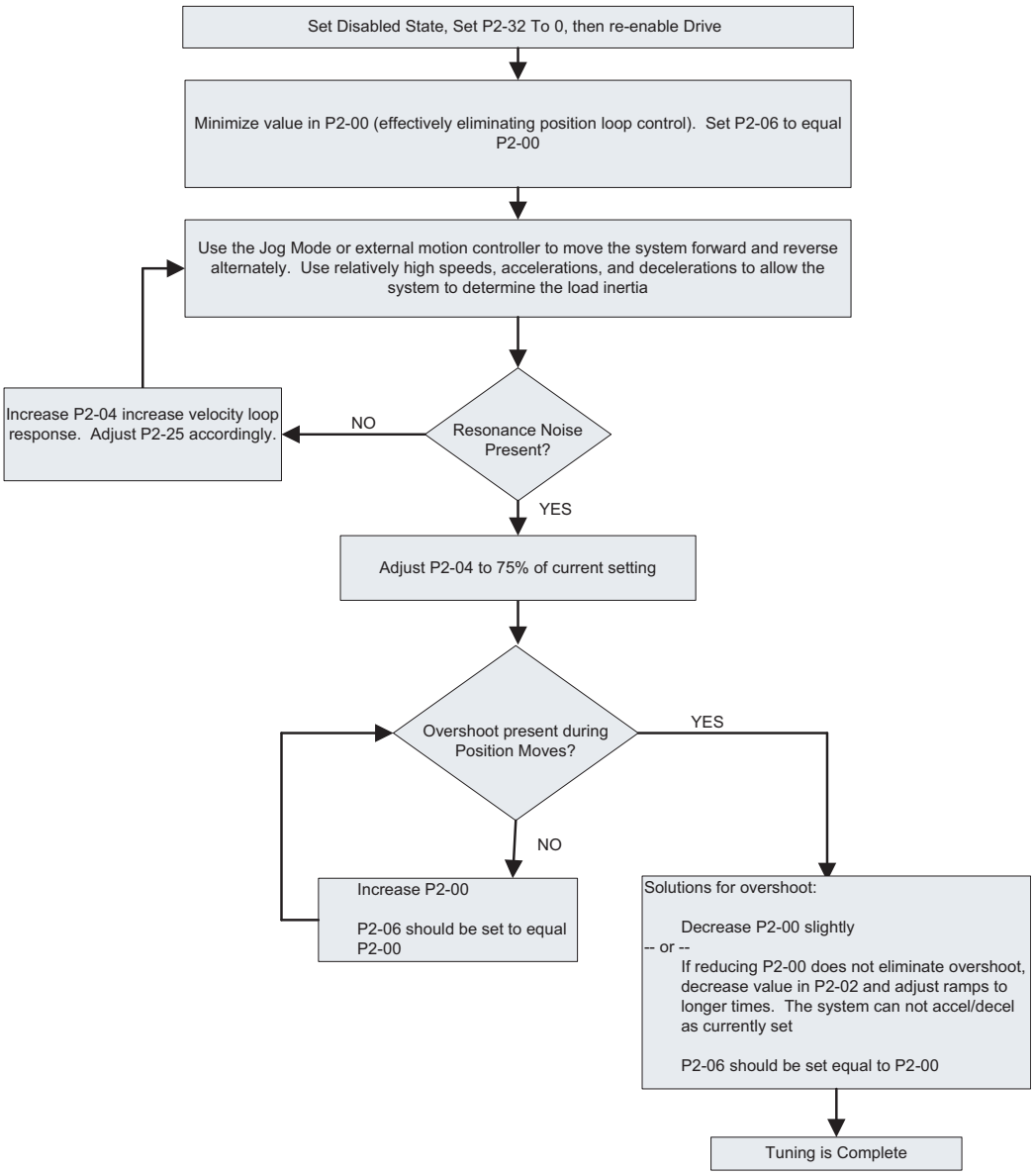

Manual Velocity Mode

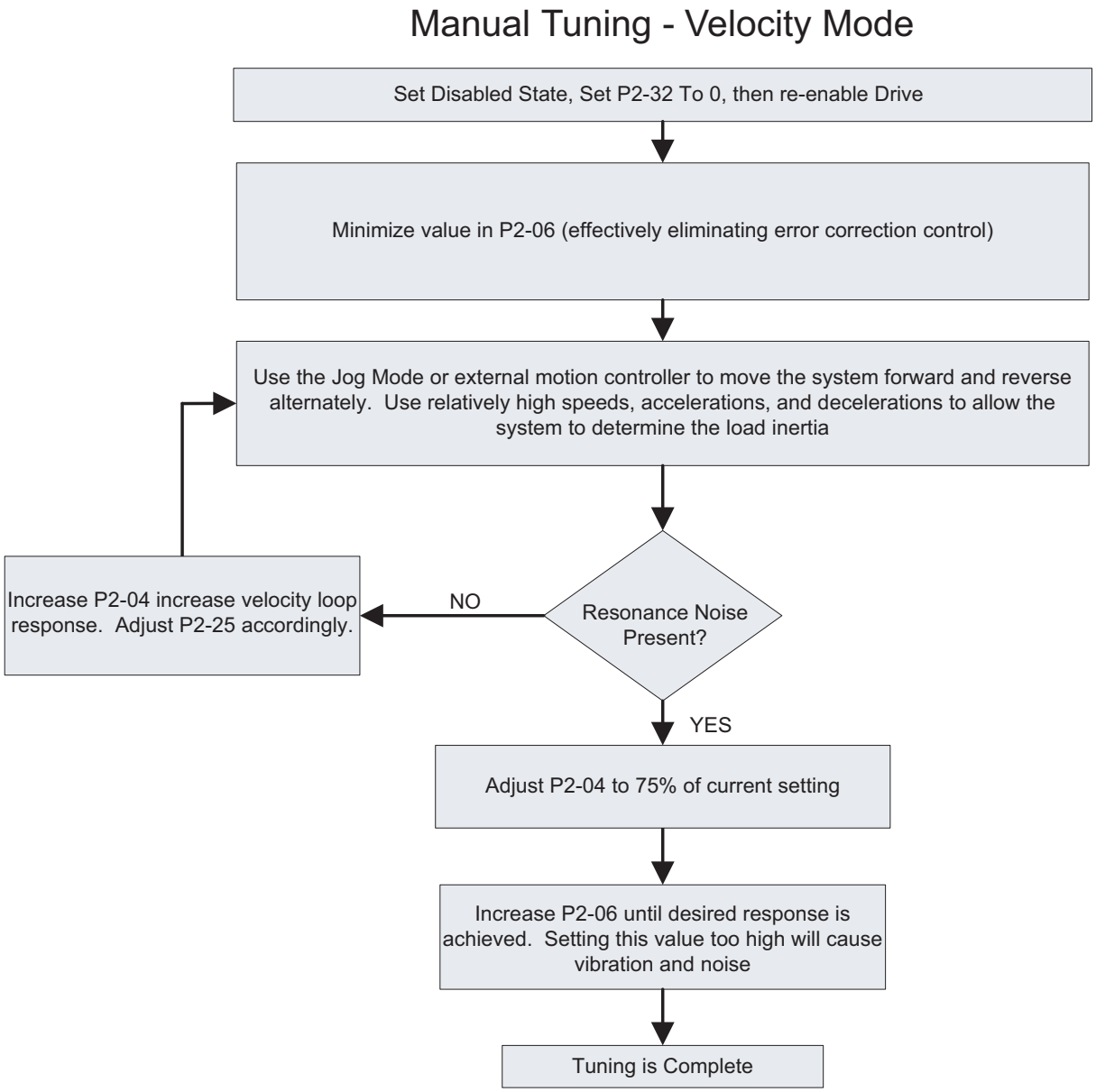

Manual Tuning Mode Details

Tuning a new system for the first time has its challenges. Sometimes it is necessary to address a difficult tuning application using the manual mode. This mode requires the user be an expert in servo system architecture and system tuning. In general the Auto-Tune and Easy-Tune modes will address a majority of the applications that *Sure*Servo systems are applied.

Gain Adjustment in Manual Tuning Mode

The position and speed responsiveness setting is depends on, and is determined by, the desired control stiffness of machinery and conditions of applications. Generally, high responsiveness is essential for the high frequency positioning control of mechanical facilities and the applications of high precision process systems. However, the higher responsiveness may easily result in the resonance of the machinery. When adjusting the responsiveness of unfamiliar loads, the user can gradually increase the gain setting value to improve responsiveness until the resonance occurs then decrease the gain setting value slightly. The relevant parameters and gain adjusting methods are described as follows:

- **P2-00: Position Loop Proportional Gain (KPP)**

This parameter is used to determine the responsiveness of position loop (position loop gain) and is used to increase stiffness and reduce position error. With higher values of KPP, the response to the position command is quicker, the position error is less, and the settling time is shorter. However, if the setting is too high, the machinery system may generate vibration or noise, or even overshoot during positioning.

Position Loop Bandwidth (Hz) = KPP ÷ 2π

- **P2-02: Position Feed Forward Gain (KFF)**

This parameter is used to reduce position error and shorten the positioning settling time. However, if the value is set too high, it may easily lead to the overshoot of the machinery system. If the value of electronic gear ratio (i.e. P1-44 / P1-45) is higher than 10, the machinery system may also easily generate vibration or noise. Determine an appropriate value for P2-02 (KFF) by trial and error.

- **P2-04: Velocity Loop Proportional Gain (KVP)**

This parameter is used to determine the responsiveness of velocity loop (velocity loop gain) and it used to set the velocity loop response (BW). With higher values of KVP, the response to the velocity command is quicker. However, if the setting is too high, it may result in unwanted mechanical resonance of the system. The velocity loop must be 4~6 times the responsiveness of position loop. If the position loop gain is nearly the same or higher than the velocity loop, the servo system may generate vibration or noise, overshoot during positioning, and become unstable.

Velocity Loop Bandwidth (Hz) = KVP ÷ [(1 + 2π) (P1-37)]

- **P2-06: Velocity Loop Integral Compensation (KVI)**

Higher setting values of KVI improve the capability of decreasing the speed control deviation. However, if the setting value is too high, it may easily result in the vibration of the machinery system.

The recommended setting value is as follows:

P2-06 ≤ (1.5) (Velocity Loop Bandwidth)

- **P2-25: Low-pass Filter (Resonance Suppression)**

Use this parameter to suppress or eliminate the noise or resonance. As the inertia mismatch ratio increases, the velocity loop bandwidth (KVP) may be increased to maintain the responsiveness of system. However, increasing KVP may easily result in the vibration of the machinery system. Increasing P2-25 should reduce the noise or resonance. Setting P2-25 too high will lead to the instability of the velocity loop and overshoot of the machinery system.

The recommended setting value is as follows:

P2-25 ≤ 1000 ÷ [(4) (Velocity Loop Bandwidth)]

- **P2-26: External Anti-Interference Gain (used in PDFF modes)**

This parameter is used to enhance the anti-interference capability and reduce the occurrence of overshoot. The default setting is 0 (Disabled). It is not recommended to be used in Manual Mode unless its value is determined by the adaptive fixed Auto-Tune PDFF mode (P2-32 = 5). Once the value is determined in mode 5, it can be left when the tuning mode is set to Manual (P2-32 = 0).

MODBUS COMMUNICATIONS

CHAPTER 6

In This Chapter ...

*Sure*Servo™ Communication Parameters 6–2

*Sure*Servo™ Parameter Memory Addresses 6–3

Connecting to *Direct*Logic PLCs 6–8

Step 1: Modbus RTU Master PLCs 6–8

Step 2: Make the Connections 6–8

Step 3: Confirm/Set Servo Communication Parameters 6–10

Step 4: Configure the *Direct*LOGIC CPU Port 2 6–10

*Sure*Servo™ / *Direct*LOGIC PLC Control Example .6–13

*Direct*LOGIC Ladder Programming Example – Multiple Drives . .6–22

Communicating with Third-party Devices 6–24

Common Modbus RTU Masters 6–24

Modbus Protocol Modes 6–25

Modbus ASCII and RTU Data Format 6–25

Communication Protocol 6–27

*Sure*Servo™ Communication Parameters

The *Sure*Servo™ drives support the Modbus RTU/ASCII communications protocols as a slave device only. Drive serial port CN3 can be connected to a Modbus master using RS-232, RS-422 or RS-485 communications (port pin-outs and wiring diagrams are shown later in this chapter). This chapter lists all of the drive's parameters along with the corresponding Modbus addresses. Network masters, such as ***Direct***Logic PLCs, can be used to read/write drive(s) parameters.
The *Sure*Servo drive Communications Parameters listed below must be set using the *Sure*Servo Pro software or the drive keypad unless the defaults are appropriate for your application. For a detailed explanation of all *Sure*Servo Parameters, refer to CHAPTER 4.

Communications Parameters			
Parameter	**Description**	**Range**	**Default**
P3-00	Communication Address	01 to 254	01
P3-01	Transmission Speed	00: 4800 baud 01: 9600 baud 02: 19200 baud 03: 38400 baud 04: 57600 baud 05: 115200 baud	02
P3-02	Communication Protocol	00: Modbus ASCII mode 7 data bits, no parity, 2 stop bits 01: Modbus ASCII mode 7 data bits, even parity, 1 stop bit 02: Modbus ASCII mode 7 data bits, odd parity, 1 stop bit 03: Modbus ASCII mode 8 data bits, no parity, 2 stop bits 04: Modbus ASCII mode 8 data bits, even parity, 1 stop bit 05: Modbus ASCII mode 8 data bits, odd parity, 1 stop bit 06: Modbus RTU mode 8 data bits, no parity, 2 stop bits 07: Modbus RTU mode 8 data bits, even parity, 1 stop bit 08: Modbus RTU mode 8 data bits, odd parity, 1 stop bit	08
P3-03	Transmission Fault Action	00: Display fault and continue operating 01: Display fault and RAMP to stop	00
P3-04	Communication Watchdog Time Out	0 to 20.0 seconds	00
P3-05	Communication Selection	00: RS-232 01: RS-422 02: RS-485	00
P3-06	Reserved	-	-
P3-07	Communication Response Delay Time	00 to 255ms (increments of 0.5 ms)	00

*Sure*Servo™ Parameter Memory Addresses

Parameter Memory Addresses				
Parameter	**Description**	**Hexadecimal**	**Modbus Decimal**	**Octal**
Group 0: Monitor Parameters				
P0-00	Software Version	0000	40001	0
P0-01	Drive Fault Code	0001	40002	1
P0-02	Drive Status (Front Panel Display)	0002	40003	2
P0-03	Analog Monitor Outputs	0003	40004	3
P0-04	Status Monitor 1	0004	40005	4
P0-05	Status Monitor 2	0005	40006	5
P0-06	Status Monitor 3	0006	40007	6
P0-07	Status Monitor 4	0007	40008	7
P0-08	Status Monitor 5	0008	40009	10
P0-09	Block Transfer Parameter 1	0009	40010	11
P0-10	Block Transfer Parameter 2	000A	40011	12
P0-11	Block Transfer Parameter 3	000B	40012	13
P0-12	Block Transfer Parameter 4	000C	40013	14
P0-13	Block Transfer Parameter 5	000D	40014	15
P0-14	Block Transfer Parameter 6	000E	40015	16
P0-15	Block Transfer Parameter 7	000F	40016	17
P0-16	Block Transfer Parameter 8	0010	40017	20
P0-17	Output Functions Status	0011	40018	21
P0-18	Servo On Time Record	0012	40019	22
Group 1: Basic Parameters				
P1-00	External Pulse Type Input	0100	40257	400
P1-01	Control Mode and Output Direction	0101	40258	401
P1-02	Speed and Torque Limit	0102	40259	402
P1-03	Output Polarity Setting	0103	40260	403
P1-04	Analog Monitor Output Scaling 1 (ch 1)	0104	40261	404
P1-05	Analog Monitor Output Scaling 2 (ch 2)	0105	40262	405
P1-06	Analog Speed Command Low-pass Filter	0106	40263	406
P1-07	Analog Torque Command Low-pass Filter	0107	40264	407
P1-08	Position Command Low-pass Filter	0108	40265	410
P1-09	Velocity Command 1 Speed Limit 1	0109	40266	411
P1-10	Velocity Command 2 Speed Limit 2	010A	40267	412
P1-11	Velocity Command 3 Speed Limit 3	010B	40268	413
P1-12	Torque Command 1 Torque Limit 1	010C	40269	414
P1-13	Torque Command 2 Torque Limit 2	010D	40270	415
P1-14	Torque Command 3 Torque Limit 3	010E	40271	416

Parameter Memory Addresses (continued)				
Parameter	**Description**	**Hexadecimal**	**Modbus Decimal**	**Octal**
Group 1: Basic Parameters (continued)				
P1-15	Position Command 1- Revolutions	010F	40272	417
P1-16	Position Command 1- Pulse	0110	40273	420
P1-17	Position Command 2- Revolutions	0111	40274	421
P1-18	Position Command 2- Pulse	0112	40275	422
P1-19	Position Command 3- Revolutions	0113	40276	423
P1-20	Position Command 3- Pulse	0114	40277	424
P1-21	Position Command 4- Revolutions	0115	40278	425
P1-22	Position Command 4- Pulse	0116	40279	426
P1-23	Position Command 5- Revolutions	0117	40280	427
P1-24	Position Command 5- Pulse	0118	40281	430
P1-25	Position Command 6- Revolutions	0119	40282	431
P1-26	Position Command 6- Pulse	011A	40283	432
P1-27	Position Command 7- Revolutions	011B	40284	433
P1-28	Position Command 7- Pulse	011C	40285	434
P1-29	Position Command 8- Revolutions	011D	40286	435
P1-30	Position Command 8- Pulse	011E	40287	436
P1-31	Motor Code	011F	40288	437
P1-32	Motor Stop Code	0120	40289	440
P1-33	Position Control Mode	0121	40290	441
P1-34	Acceleration Time	0122	40291	442
P1-35	Deceleration Time	0123	40292	443
P1-36	Acceleration/Deceleration S-curve	0124	40293	444
P1-37	Inertia Mismatch Ratio	0125	40294	445
P1-38	Zero Speed Output Threshold	0126	40295	446
P1-39	Target Speed Output Threshold	0127	40296	447
P1-40	Analog Full Scale Velocity Command/Limit	0128	40297	450
P1-41	Analog Full Scale Torque Command/Limit	0129	40298	451
P1-42	On Delay Time of Electromagnetic Brake	012A	40299	452
P1-43	Off Delay Time of Electromagnetic Brake	012B	40300	453
P1-44	Electronic Gear Numerator 1	012C	40301	454
P1-45	Electronic Gear Denominator	012D	40302	455
P1-46	Encoder Output Scaling Factor	012E	40303	456
P1-47	Homing Mode	012F	40304	457
P1-48	Homing Speed 1 - Fast Search Speed	0130	40305	460
P1-49	Homing Speed 2 - Creep Speed	0131	40306	461
P1-50	Home Position Offset (revolutions)	0132	40307	462

Parameter Memory Addresses (continued)				
Parameter	**Description**	**Hexadecimal**	**Modbus Decimal**	**Octal**
Group 1: Basic Parameters (continued)				
P1-51	Home Position Offset (counts)	0133	40308	463
P1-52	Regenerative Resistor Value	0134	40309	464
P1-53	Regenerative Resistor Capacity	0135	40310	465
P1-54	In Position Window	0136	40311	466
P1-55	Maximum Speed Limit	0137	40312	467
P1-56	Overload Output Warning Threshold	0138	40313	470

Group 2: Extended Parameters				
P2-00	Position Loop Proportional Gain (KPP)	0200	40513	1000
P2-01	Position Loop Gain Boost	0201	40514	1001
P2-02	Position Feed Forward Gain (KFF)	0202	40515	1002
P2-03	Smooth Constant of Position Feed Forward Gain	0203	40516	1003
P2-04	Velocity Loop Proportional Gain (KVP)	0204	40517	1004
P2-05	Velocity Loop Gain Boost	0205	40518	1005
P2-06	Velocity Loop Integral Compensation	0206	40519	1006
P2-07	Velocity Feed Forward Gain	0207	40520	1007
P2-08	Factory Defaults and Security	0208	40521	1010
P2-09	Debounce Filter	0209	40522	1011
P2-10	Digital Input Terminal 1 (DI1)	020A	40523	1012
P2-11	Digital Input Terminal 2 (DI2)	020B	40524	1013
P2-12	Digital Input Terminal 3 (DI3)	020C	40525	1014
P2-13	Digital Input Terminal 4 (DI4)	020D	40526	1015
P2-14	Digital Input Terminal 5 (DI5)	020E	40527	1016
P2-15	Digital Input Terminal 6 (DI6)	020F	40528	1017
P2-16	Digital Input Terminal 7 (DI7)	0210	40529	1020
P2-17	Digital Input Terminal 8 (DI8)	0211	40530	1021
P2-18	Digital Output Terminal 1 (DO1)	0212	40531	1022
P2-19	Digital Output Terminal 2 (DO2)	0213	40532	1023
P2-20	Digital Output Terminal 3 (DO3)	0214	40533	1024
P2-21	Digital Output Terminal 4 (DO4)	0215	40534	1025
P2-22	Digital Output Terminal 5 (DO5)	0216	40535	1026
P2-23	Notch Filter (resonance suppression)	0217	40536	1027
P2-24	Notch Filter Attenuation (resonance suppress.)	0218	40537	1030
P2-25	Low-pass Filter (resonance suppression)	0219	40538	1031
P2-26	External Anti-Interference Gain	021A	40539	1032
P2-27	Gain Boost Control	021B	40540	1033
P2-28	Gain Boost Switching Time	021C	40541	1034

Parameter Memory Addresses (continued)				
Parameter	**Description**	**Hexadecimal**	**Modbus Decimal**	**Octal**
Group 2: Extended Parameters (continued)				
P2-29	Gain Boost Switching Condition	021D	40542	1035
P2-30	Auxiliary Function	021E	40543	1036
P2-31	Auto and Easy Mode Response Level	021F	40544	1037
P2-32	Tuning Mode	0220	40545	1040
P2-34	Overspeed Fault Threshold	0222	40547	1042
P2-35	Position Deviation Fault Window	0223	40548	1043
P2-36	Position 1 Velocity	0224	40549	1044
P2-37	Position 2 Velocity	0225	40550	1045
P2-38	Position 3 Velocity	0226	40551	1046
P2-39	Position 4 Velocity	0227	40552	1047
P2-40	Position 5 Velocity	0228	40553	1050
P2-41	Position 6 Velocity	0229	40554	1051
P2-42	Position 7 Velocity	022A	40555	1052
P2-43	Position 8 Velocity	022B	40556	1053
P2-44	Digital Output Mode	022C	40557	1054
P2-45	Index Mode Output Signal Delay Time	022D	40558	1055
P2-46	Index Mode - Stations	022E	40559	1056
P2-47	Position Deviation Clear Delay Time	022F	40560	1057
P2-48	Backlash Compensation (index mode)	0230	40561	1060
P2-49	Jitter Suppression	0231	40562	1061
P2-50	Clear Position Mode	0232	40563	1062
P2-51	Servo On Command	0233	40564	1063
P2-52	Dwell Time 1 (auto index mode)	0234	40565	1064
P2-53	Dwell Time 2 (auto index mode)	0235	40566	1065
P2-54	Dwell Time 3 (auto index mode)	0236	40567	1066
P2-55	Dwell Time 4 (auto index mode)	0237	40568	1067
P2-56	Dwell Time 5 (auto index mode)	0238	40569	1070
P2-57	Dwell Time 6 (auto index mode)	0239	40570	1071
P2-58	Dwell Time 7 (auto index mode)	023A	40571	1072
P2-59	Dwell Time 8 (auto index mode)	023B	40572	1073
P2-60	Electronic Gear Numerator 2	023C	40573	1074
P2-61	Electronic Gear Numerator 3	023D	40574	1075
P2-62	Electronic Gear Numerator 4	023E	40575	1076
P2-63	Velocity and Position Deviation Scaling Factor	023F	40576	1077
P2-64	Advanced Torque Limit Mode	0240	40577	1100
P2-65	Special Input Functions	0241	40578	1101

Parameter Memory Addresses (continued)				
Parameter	**Description**	**Hexadecimal**	**Modbus Decimal**	**Octal**
Group 3: Communication Parameters				
P3-00	Communication Address	0300	40769	1400
P3-01	Transmission Speed	0301	40770	1401
P3-02	Communication Protocol	0302	40771	1402
P3-03	Communication Fault Action	0303	40772	1403
P3-04	Communication Watchdog Time Out	0304	40773	1404
P3-05	Communication Selection	0305	40774	1405
P3-07	Communication Response Delay Time	0307	40776	1407
P3-08	Digital Input Software Control Mask	0308	40777	1410

Group 4: Diagnostic Parameters				
P4-00	Fault Record (N) (most recent)	0400	41025	2000
P4-01	Fault Record (N-1)	0401	41026	2001
P4-02	Fault Record (N-2)	0402	41027	2002
P4-03	Fault Record (N-3)	0403	41028	2003
P4-04	Fault Record (N-4)	0404	41029	2004
P4-05	Jog Function	0405	41030	2005
P4-06	Force Outputs Command	0406	41031	2006
P4-07	Input Status	0407	41032	2007
P4-09	Output Status	0409	41034	2011
P4-20	Analog Monitor 1 Offset (ch 1)	0414	41045	2024
P4-21	Analog Monitor 2 Offset (ch 2)	0415	41046	2025
P4-22	Analog Velocity Input Offset	0416	41047	2026
P4-23	Analog Torque Input Offset	0417	41048	2027

Connecting to *Direct*LOGIC PLCs

The following steps explain how to connect and communicate with the *Sure*Servo drives using ***Direct***LOGIC PLCs.

Step 1: Modbus RTU Master PLCs

The *Sure*Servo™ servo drives will communicate with the following ***Direct***LOGIC CPUs using the Modbus RTU protocol.

Modbus RTU Master Support	
MRX/MWX Instructions	DL06 or DL-260 CPU port 2
RX/WX Instructions	DL05, DL06, DL250-1 or DL260 CPU port 2

Step 2: Make the Connections

There are several means of communicating serially from a ***Direct***logic PLC.

CPU Connections	
RS-232	DL05/DL06/DL250-1/DL260 port 2
RS-485	DL06/DL260 port 2
RS-422	DL06/DL250-1/DL260 port 2

DL06/DL250-1/DL260: RS-232 Connection Wiring

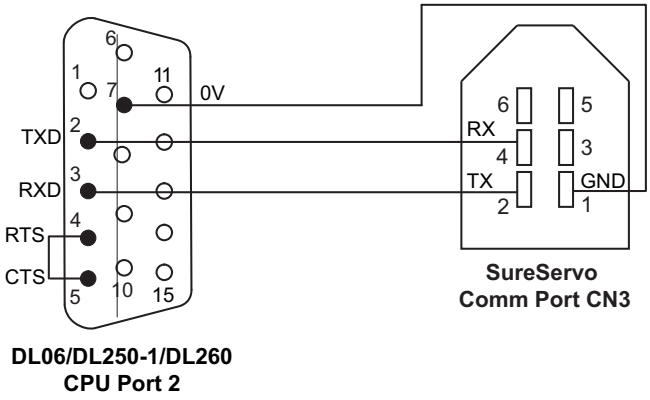

DL05: RS-232 Connection Wiring

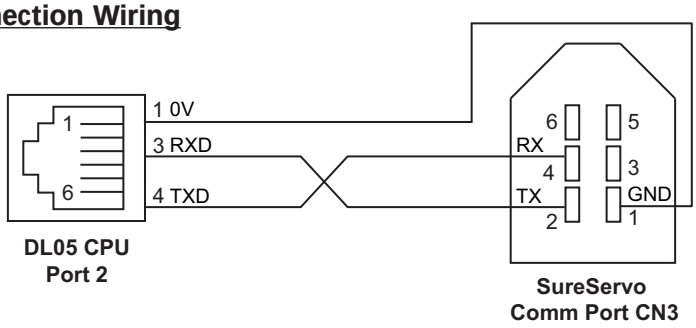

DL06/DL260: RS-485 Connection Wiring

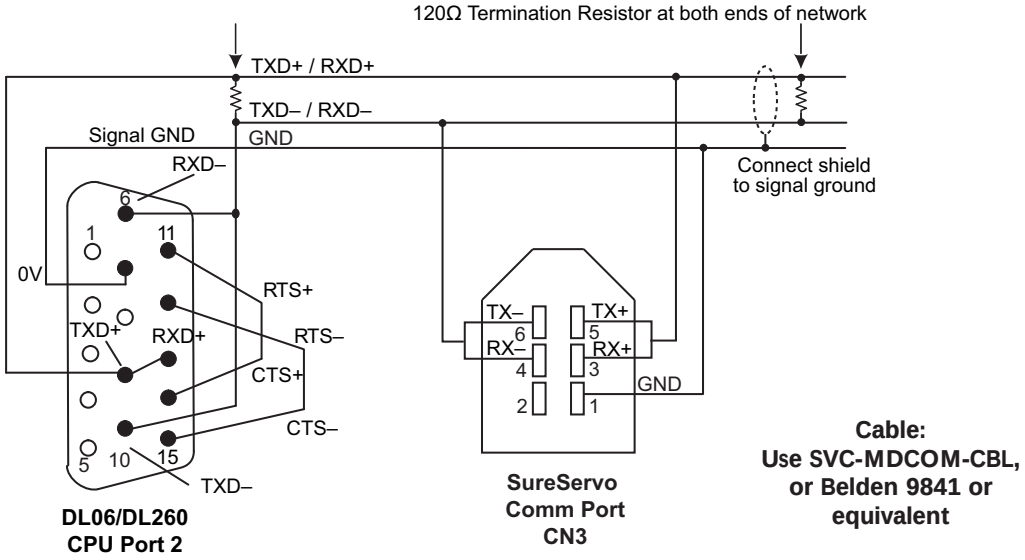

DL06/DL250-1/DL260: RS-422 Connection Wiring

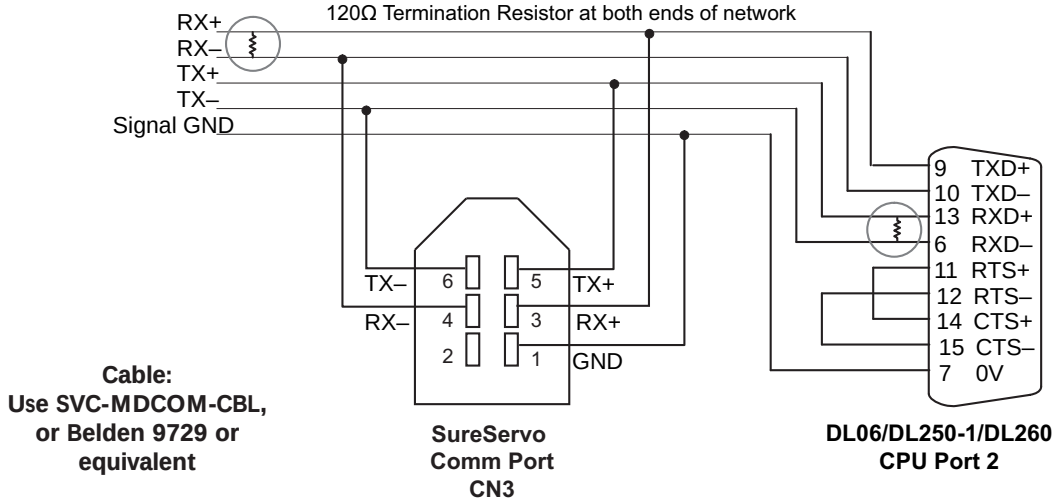

Termination Resistors are required at both ends of RS-422/485 networks. It is necessary to select resistors that match the impedance rating of the cable (between 100 and 500 Ohms.)

*Sure*Servo *drives have a provision for shutting down control or power to the drive in the event of a communications timeout. This is set up using drive parameters P3-03 and P3-04 along with a digital output configured for servo fault alarm.*

Step 3: Confirm/Set Servo Communication Parameters

Most drive parameters can be written to or updated from a master controller using Modbus communications. However, the drive's operational "run" commands (i.e Servo On, Command Trigger, RESET, etc) can only be executed by controlling the drive's physical digital inputs.

The following *Sure*Servo™ communications parameters must match the ***Direct***LOGIC CPU port settings in order to establish communications. Refer to the servo Communication parameters (P3-**) for available settings.

P3-00: Communication address (default 1) - PLC read/write instructions use comm address to target a specific drive

P3-01: Communication baud rate (default 19200 bps)

P3-02: Communication protocol (default Modbus RTU mode <8 data bits, odd parity, 1 stop bit>

P3-05: Communication Selection (default RS-232)

Other related Parameters to note:

P2-30: Aux Function - setting this parameter to (5) will disable "parameter write to EEPROM" each time communications is attempted with the drive (default 0). This parameter setting is not retained when power is disconnected from the drive.

*The previous list of parameter settings is the minimum required to establish communications with a **Direct**LOGIC PLC. There are several other parameters that must be set through the drive keypad to configure the drive up for your application.*

Step 4: Configure the *Direct*LOGIC CPU Port 2

The ***Direct***LOGIC CPUs must be configured as a Modbus RTU master PLC to communicate with the *Sure*Servo drives. This includes setting up the PLC communication port parameters and creating ladder logic programming code that uses read/write instructions to communicate with the drive(s).

The set up for all of the ***Direct***LOGIC CPUs is very similar. Refer to the appropriate CPU User Manual for the specifics on your ***Direct***LOGIC CPU.

*Direct*LOGIC Modbus RTU Master Port Configuration for DL06/DL260

The following configuration example is specific to the DL06/DL260 CPU. Refer to the appropriate CPU User Manual for the specifics on your ***Direct***LOGIC CPU.

- In ***Direct***SOFT, select the PLC menu, then Setup, then "Secondary Comm Port"
- From the Port list box, select **"Port 2"**
- For the Protocol, select **"Modbus"**
- In the Timeout list box, select **"800 ms"**
- Response Delay Time should be **"0 ms"**
- The Station Number should be set to **"1"** to allow the CPU to function as network master
- The Baud Rate should be set at **"19200"**
- In the Stop Bits list box, select **"1"**
- In the Parity list box, select **"Odd"**
- In the Echo Suppression box, select the wiring method used in the application

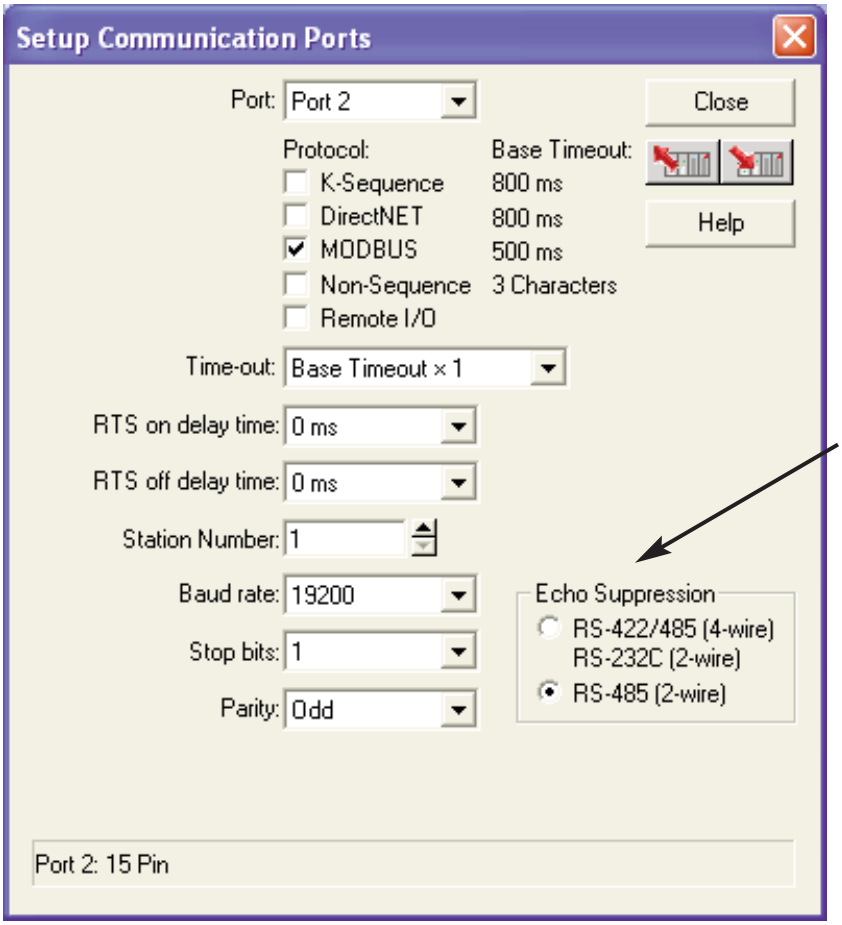

Select the appropriate button based on the comm wiring

*Direct*LOGIC Modbus RTU Master Port Configuration for DL05/DL250-1

The following configuration example is specific to the DL05 or DL250-1 CPU. Refer to the appropriate CPU User Manual for the specifics on your ***Direct***LOGIC CPU.

- In ***Direct***SOFT, select the PLC menu, then Setup, then "Secondary Comm Port"
- From the Port list box, select **"Port 2"**
- For the Protocol, select **"Modbus"**
- In the Timeout list box, select **"800 ms"**
- Response Delay Time should be **"0 ms"**
- The Station Number should be set to **"1"** to allow the CPU to function as network master
- The Baud Rate should be set at **"19200"**
- In the Stop Bits list box, select **"1"**
- In the Parity list box, select **"Odd"**

The DL05/DL250-1 network instructions used in Master mode will access only slaves 1 to 90. Each slave must have a unique number.

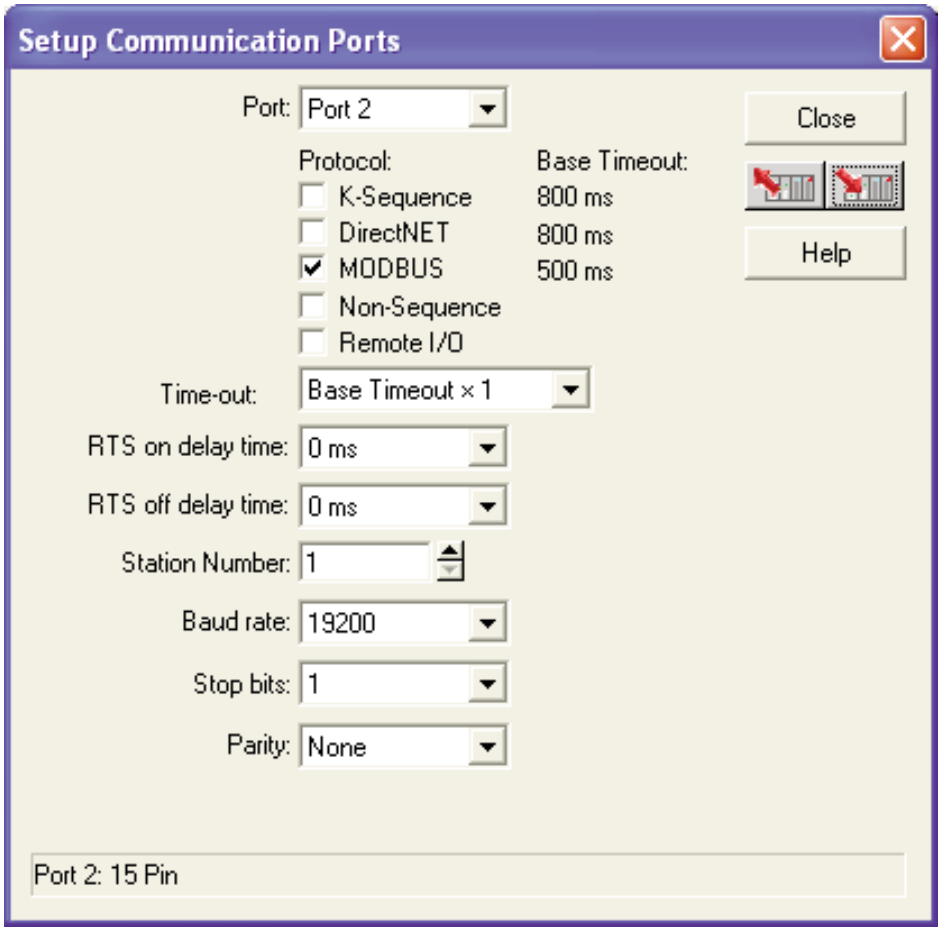

*Sure*Servo™ / *Direct*LOGIC PLC Control Example

*Sure*Servo™ *Block* Transfer Function

A group of Status Monitor Registers (P0-04 to P0-08) and a group of Block Data Registers (P0-09 to P0-16) are available in the *Sure*Servo drive. These continuous blocks of registers can be used to "group" miscellaneous drive parameters together allowing you to read/write the desired parameters in one block instead of having to use a Read/Write command for each parameter.

*Sure*Servo™ Drive Parameter Settings Example - Position Mode

The parameters listed below must be entered through the drive keypad or *Sure*Servo™ Pro software in order for the provided ladder logic example to function properly. (Parameters marked with * must be entered from the drive keypad only.) Prior to configuring a new *Sure*Servo drive or re-configuring an existing drive for a new application, it is recommended to set P2-08 = 10, then cycle drive power. This will reset drive parameters to factory defaults.

P1-01 = 101: sets drive to **position mode** with internal control
P1-33 = 1: sets drive to incremental mode
P1-34 = 500: sets the accel time to 500ms
P1-35 = 500: sets the decel time to 500ms
P1-36 = 1000: >1 to allow the accel and decel to operate

Read transfer block from drive

P0-04 = 1: assigns motor feedback rotation to Status Monitor 1
P0-05 = 0: sets the motor feedback pulse to Status Monitor 2
P0-06 = 6: assigns motor rpm to Status Monitor 3
P0-07 = 11: assigns current % load to Status Monitor 4
P0-08 = 12: assigns peak % load to Status Monitor 5
***** P0-09 = 409: assigns the digital output word to Block Transfer 1
***** P0-10 = 407: assigns the digital input word to Block Transfer 2

Write transfer block to drive

***** P0-11 = 21E: assigns Aux Function EEPROM write control to Block Transfer 3
***** P0-12 = 10F: assigns the 1st position command revolution word to Block Trans 4
***** P0-13 = 110: assigns the 1st position command pulse word to Block Transfer 5
***** P0-14 = 224: assigns the 1st position velocity reference to Block Transfer 6
P2-10 = 101: assigns digital input 1 to Servo On bit
P2-11 = 108: assigns digital input 2 to Command Trigger bit
P2-12 = 104: assigns digital input 3 Pulse Clear
P2-13 = 111: assigns digital input 4 Position Zero
P2-14 = 102: assigns digital input 5 to Reset bit
P2-15 = 22: assigns digital input 6 to CWL limit (NC)
P2-16 = 23: assigns digital input 7 to CCWL limit (NC)
P2-17 = 21: assigns digital input 8 to External Fault (NC)
P2-18 = 101: assigns digital output 1 to Servo Ready
P2-19 = 103: assigns digital output 2 to Low Speed
P2-20 = 109: assigns digital output 3 to Home Search
P2-21 = 105: assigns digital output 4 to In Position
P2-22 = 7: assigns digital output 5 to Servo Fault (NC)

*** These parameters *must* be entered using the drive keypad.**

The following list provides the ***Direct***LOGIC PLC V-memory locations and control bits along with the associated *Sure*Servo parameters used in the following ladder logic drive control example.

Parameters Read from drive (RX) and Placed in PLC V-memory

V3000 - P0-00: Firmware Version
V3001 - P0-01: Drive fault
V3002 - P0-02: Drive Status
V3003 - P0-03: Analog Monitor Output
V3004 - P0-04: Motor Feedback Rotation
V3005 - P0-05: Motor Feedback Pulse
V3006 - P0-06: Motor RPM
V3007 - P0-07: Current Load (% of rated torque)
V3010 - P0-08: Peak Load (% of rated torque since powerup)
V3011 - P0-09: Digital Output Word
V3012 - P0-10: Digital Input Word
V3013 - P0-11: Read drive EEPROM control value

Parameters/Values Written to drive (WX) from PLC V-memory

V2000 - P0-11: Drive write to EEPROM control
V2001 - P0-12: Position Command Revolutions
V2002 - P0-13: Position Command pulse
V2003 - P0-14: Velocity Reference (rpm)
V2013 - User memory location to compare velocity reference and update

Drive's digital outputs mapped from V3011 to VC120

C120 - P2-18: Digital output 1 - Servo Ready
C121 - P2-19: Digital output 2 - Low Speed
C122 - P2-20: Digital output 3 - Home Search
C123 - P2-21: Digital output 4 - In position
C124 - P2-22: Digital output 5 - Servo Fault (normally closed)

Drive's digital input terminals connected to PLC discrete outputs

Digital Input 1 - SERVO ENABLE
Digital Input 2 - CMD TRIGGER
Digital Input 3 - Pulse Clear
Digital Input 4 - Position Zero
Digital Input 5 - RESET
Digital Input 6 - CWL Limit (normally closed)
Digital Input 7 - CCWL Limit (normally closed)
Digital Input 8 - External Fault (normally closed)

*Direct*LOGIC Ladder Logic Programming Example

The setup for all of the ***Direct***LOGIC CPUs is very similar. **Refer to the appropriate CPU User Manual for the specifics on your particular *Direct*LOGIC CPU model.**

The following ladder program shows an example of how to control the *Sure*Servo drive (configured for Position Mode) using communications instructions via the Modbus RTU protocol. The drive should be set up and tested for communications before it is connected to a load.

WARNING: A drive should never be connected to a load until any applicable communication programs have been proven.

This program is for example purposes only and not intended for a specific application. The drive parameters listed on the previous pages are required for the following example program to function properly.

Rung 1 initializes the drive on first scan. The motor pulse and revolutions registers are set to zero and the motor velocity reference is set to 3000rpm.

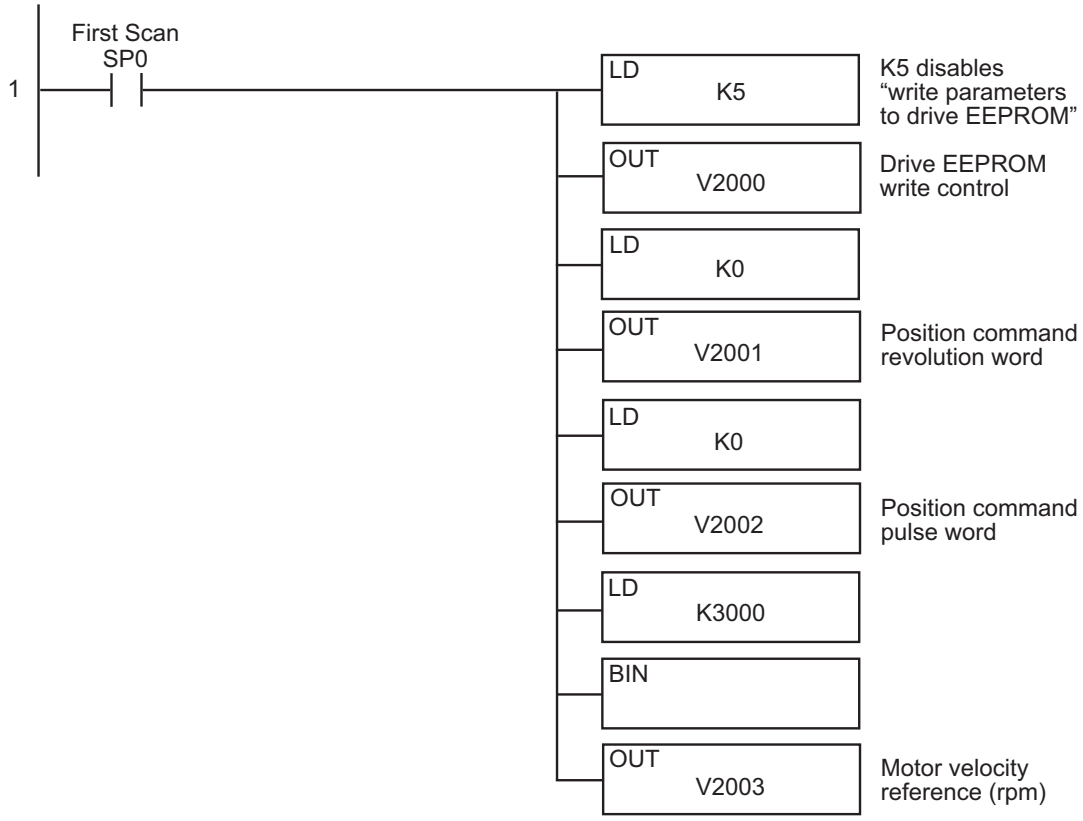

(example program cont. on next page)

*Direct*LOGIC Ladder Programming Example (continued)

In many drive applications, electromagnetic interference can at times cause frequent, short duration, communication errors. Unless the application environment is perfect, an occasional communication error will occur. In order to distinguish between these non-fatal transients and a genuine communication failure, you may want to use the instructions as shown in Rungs 2 and 3.

Rung 2 monitors the number of times that the PLC attempts to communicate with the drive. When the PLC's communication attempts are successful, SP116 (port busy) will count up and SP117 (comm error) will not count. Once the count reaches 9999, the counter will reset and resume counting.

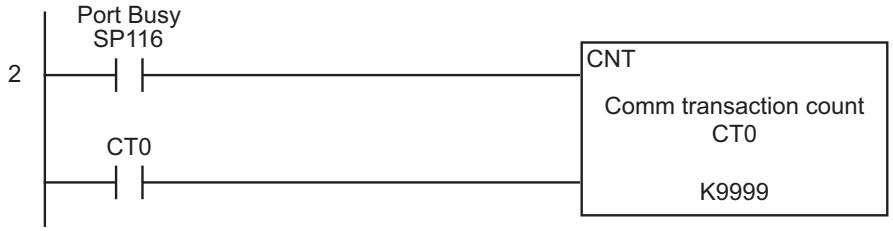

Rung 3 monitors the number of times the PLC fails in communicating with the drive.

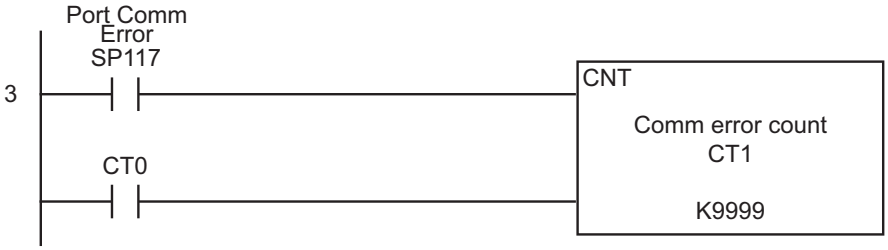

Alternative resets/control bits can be used in your application program.

(example program cont. on next page)

*Direct*LOGIC Ladder Programming Example (continued)

The Read(RX) and Write(WX) commands are supported in the DL05/06/250-1/260 *Direct*LOGIC CPUs. These instructions use octal addressing only, so the octal equivalent of the Parameter's Modbus addresses must be used.

Rung 4 reads the first 12 Monitor Parameters (P0-00 to P0-11) in the drive and places the values in V3000 - V3013 in the PLC. (Octal V0 - V13 equals Modbus 40001 - 40012).

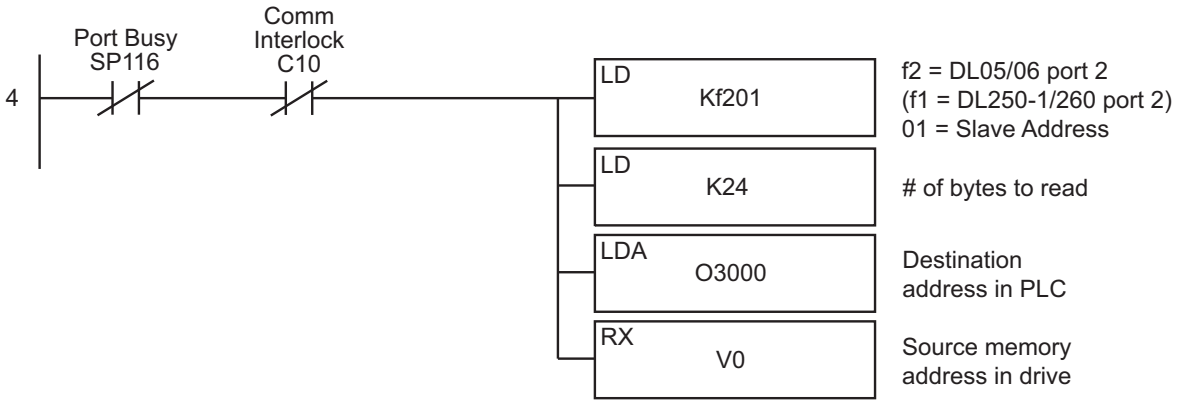

Rung 5 writes 4 words (V2000 - V2003) from the PLC to drive Block Read/Write registers P0-11 to P0-14 (Octal V13 - V16 equals Modbus 40012 - 40015).

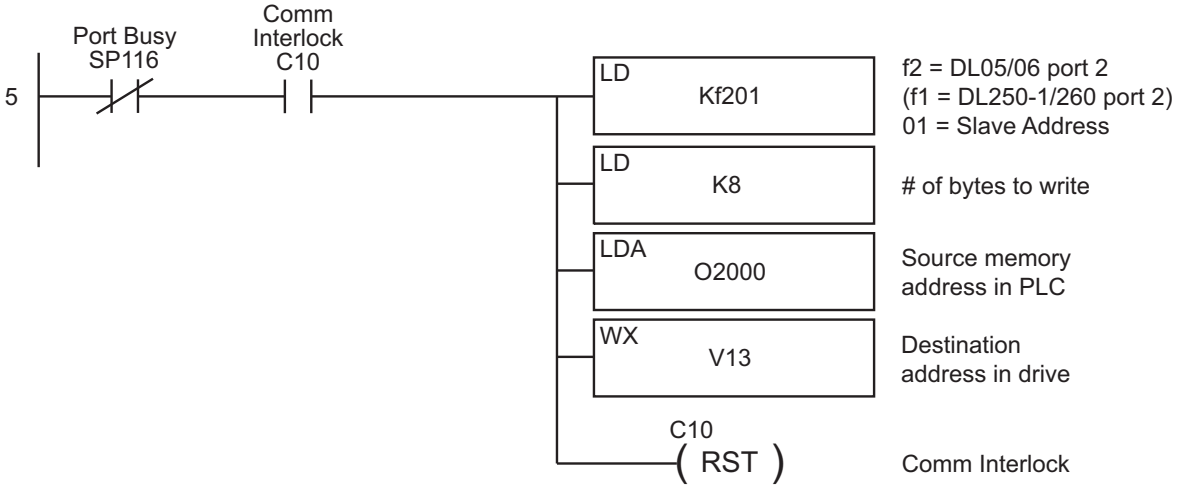

(example program cont. on next page)

Alternate Rungs 4 and 5 for use with DL06/DL260 PLC

The DL06/260 CPUs support the Modbus Read (MRX) and Modbus Write (MWX) instructions. These instructions allow you to enter Modbus Slave Memory Addresses (no need to use octal addressing conversions to communicate with the drive).

Rung 4 reads the first 12 (P0-00 to P0-11) Monitor Parameters from the drive and places the values in V3000 - V3013 in the PLC.

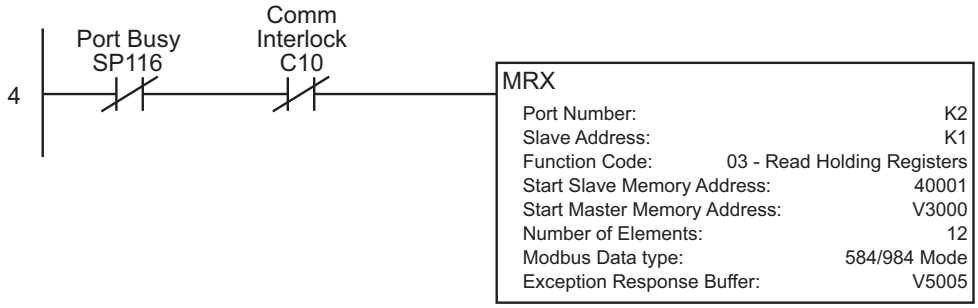

Rung 5 writes 4 words (V2000 - V2003) from the PLC to drive Block Transfer Registers P0-11 - P0-14 (Modbus 40012 - 40015).

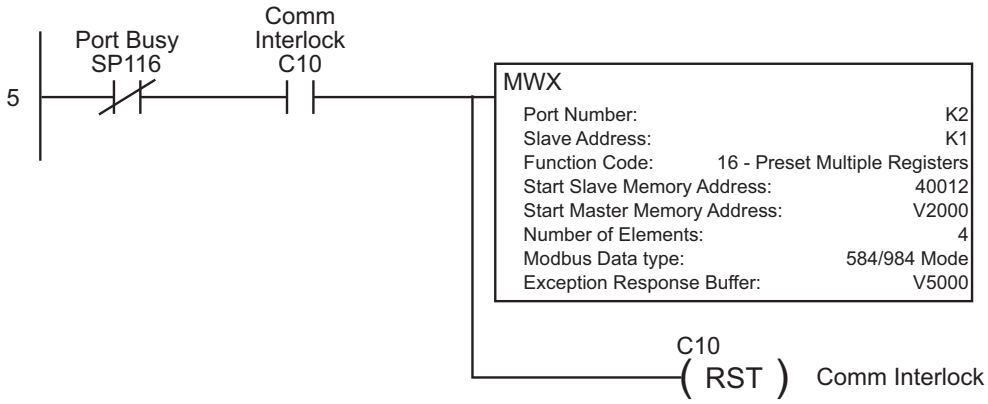

(example program cont. on next page)

*Direct*LOGIC Ladder Programming Example (continued)

Rung 6 maps the drive's digital output word that was read using the RX or MRX instruction from V3011 to C120 - C124 for bit level use.

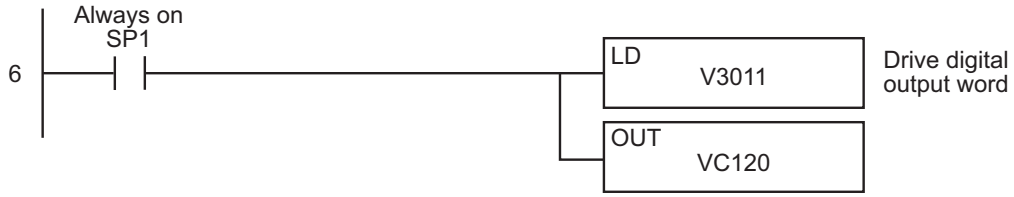

Rung 7 enables the drive (digital input 1 = Servo Enable) when C1 is turned on. Y0 is connected to drive digital input 1.

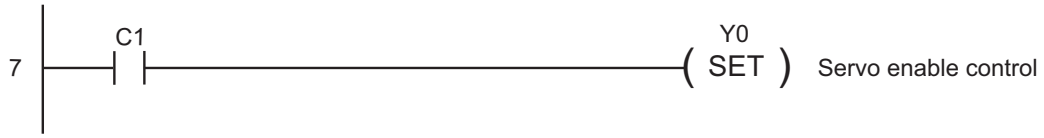

Rungs 8 loads the position (revolutions and pulse) counts to the drive when C2 is turned on. The registers are written by the WX or MWX instruction.

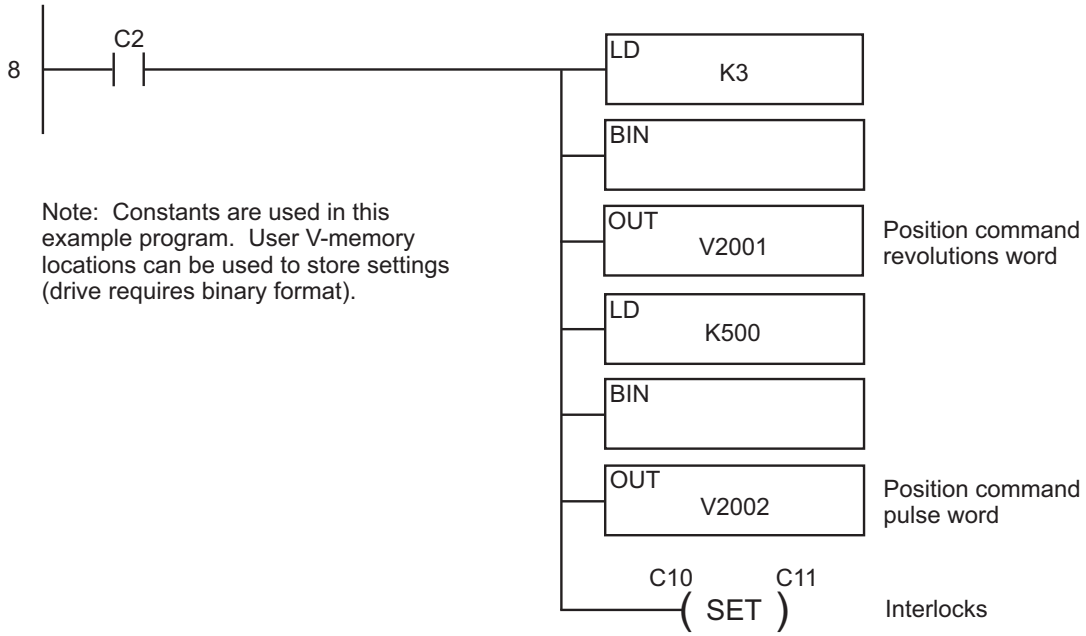

(example program cont. on next page)

*Direct*LOGIC Ladder Programming Example (continued)

Rung 9: C12 is triggered once the Position is loaded into the drive.

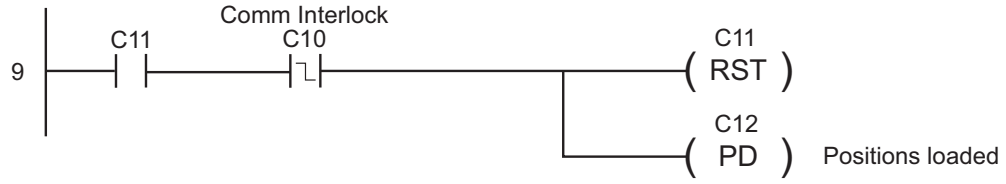

Rung 10 sets the drive's Command Trigger input to begin the motor position movement and sets C13, the drive triggered bit. Y1 is connected to drive digital input 2.

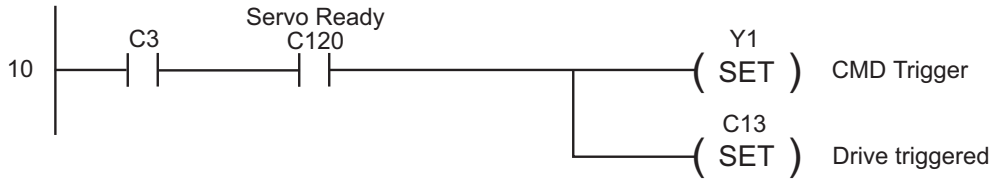

Rung 11: If the drive has been triggered and is not in position (motor is moving), the drive input CMD trigger and drive triggered flag are reset.

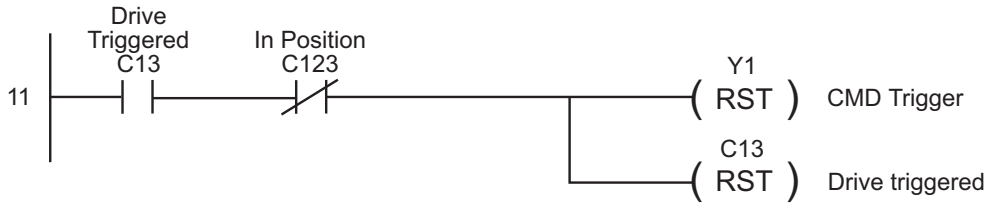

Rung 12: If C4 is turned on, drive faults and the ladder logic is reset.
Y2 is connected to drive input 3. Y4 is connected to drive input 5.

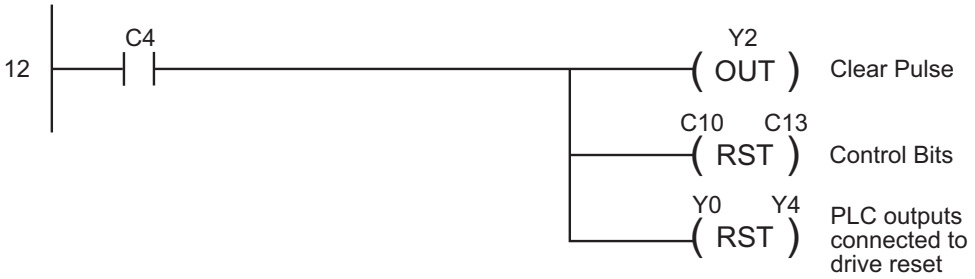

(example program cont. on next page)

*Direct*LOGIC Ladder Programming Example (continued)

Rung 13: If the EEPROM write control register (V2000) is not equal to the value read (RX or MWX) and stored in V3013, C10 will be set to enable the WX or MWX command (rung 4). This will update the drive with the value in V2000.
For example, drive parameter P2-30 (write to EEPROM control) is not retentive during drive power cycle, so the read value stored in V3013 will be 0 (zero) and the value in V2000 may be (5). This will enable the rung 13 and cause rung 4 to execute the write to drive transfer block.

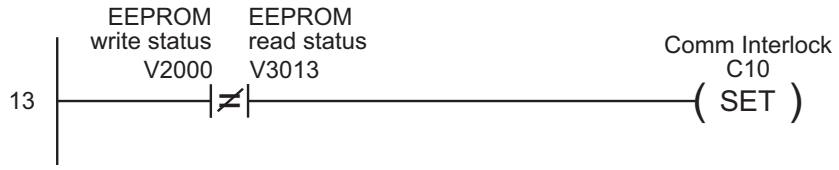

Rung 14: If the motor velocity reference register (V2003) is not equal to the previous velocity value stored in V2013 (user V-memory location), the WX command (rung 4) will execute and write the new velocity reference to the drive and will map the current value (V2003) to user V-memory location V2013.

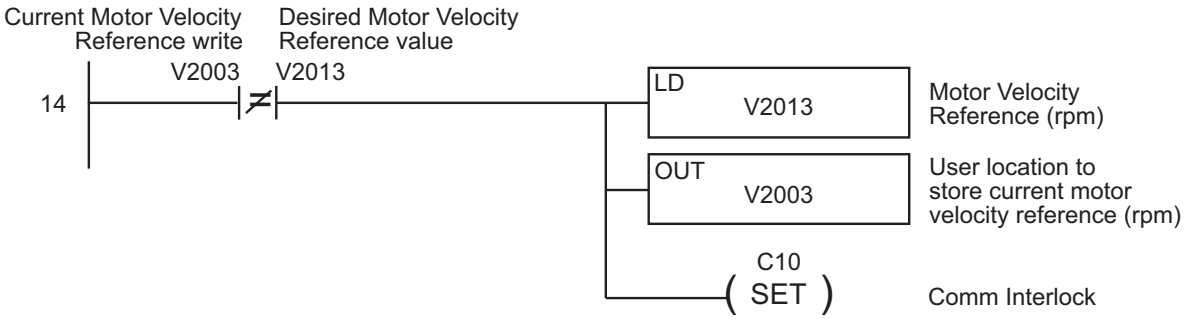

Rung 15: All ladder logic programs must be terminated with an (END) command.

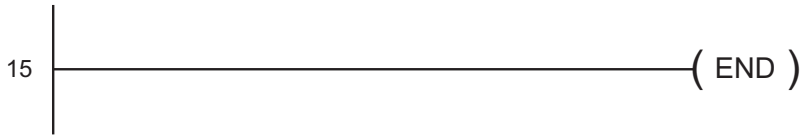

*Direct*LOGIC Ladder Programming Example – Multiple Drives

The set up for all of the ***Direct***LOGIC CPUs is very similar. Refer to the appropriate CPU User Manual for the specifics on your ***Direct***LOGIC CPU.

The following ladder program shows an example of a DL06 or DL260 CPU port 2 controlling two *Sure*Servo™ drives using MRX/MWX instructions. The drive must be set up and tested for communications before it is connected to a load. See the previous ladder example for rung instruction explanations.

WARNING: A drive should never be connected to a load until any applicable communication programs have been proven.

This program is for example purposes only and not intended for a specific application.

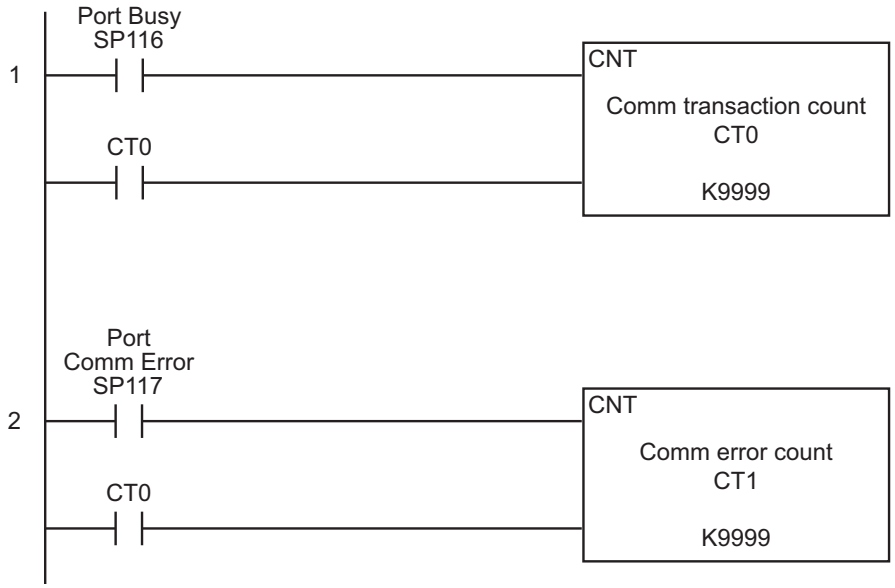

Rung 3 contains a counter which is used to determine which MRX or MWX instruction to execute. Its purpose is to prevent multiple MRX/MWX rungs being active at the same time. Since the counter may only have one value at any particular time, only a single rung may be executed.

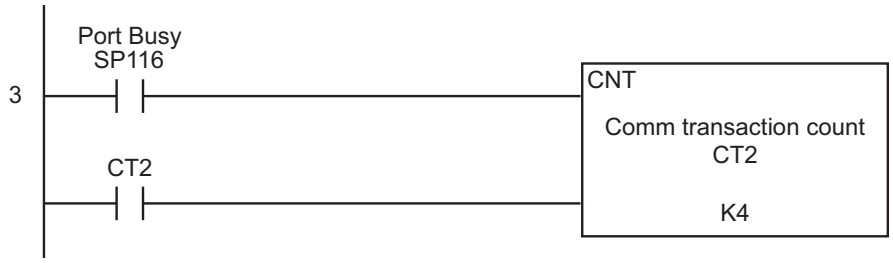

(example program cont. on next page)

*Direct*LOGIC Modbus Ladder Programming -Multiple Drives, cont.

Please also note that adding additional MRX/MWX rungs would be accomplished simply by increasing the K4 value to the new total number of MRX and MWX instructions needed. SP116 is used to increment the counter so that each time an MRX or MWX is executed, the counter then enables the next MRX or MWX once the current MRX or MWX is complete.

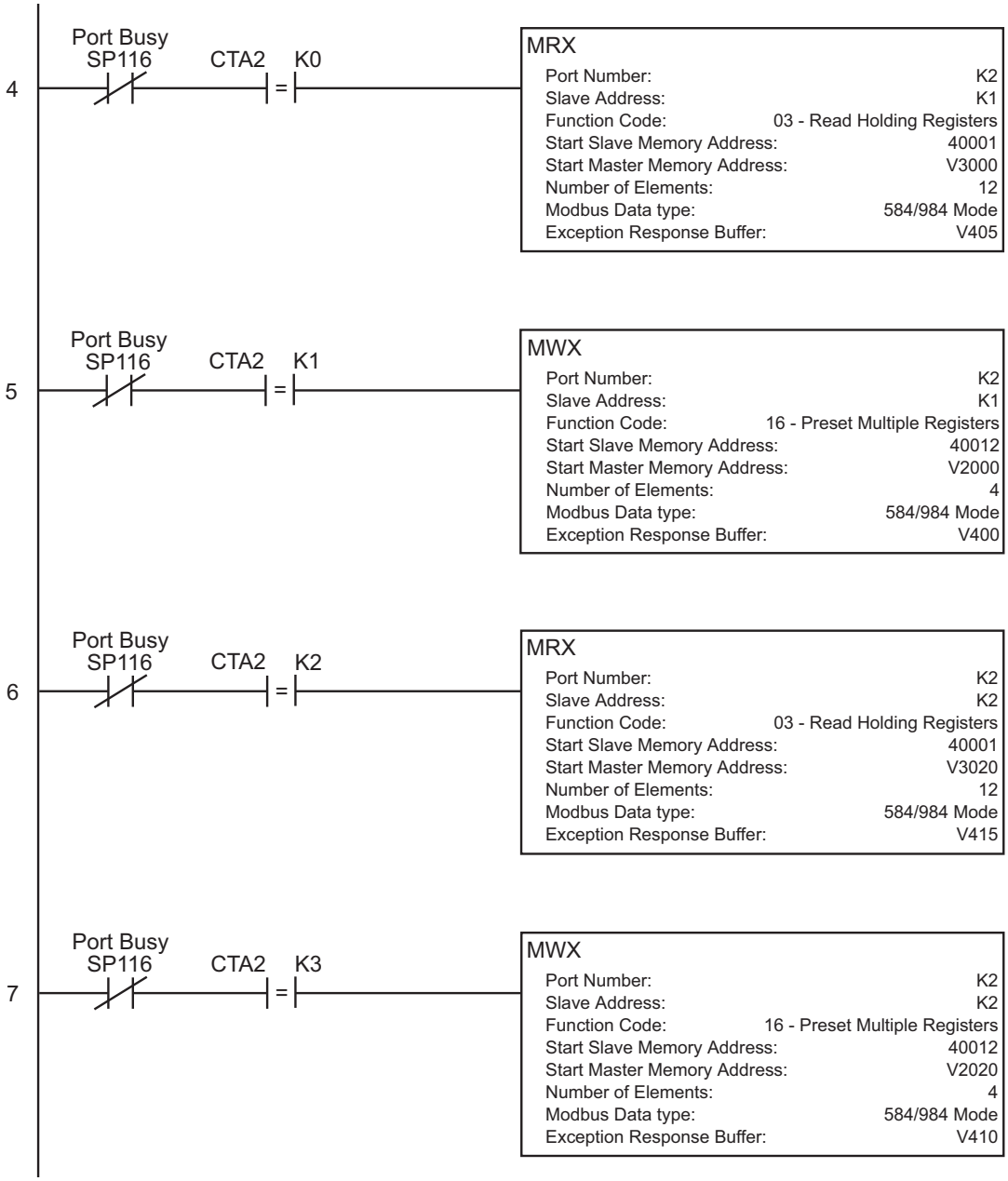

Communicating with Third-party Devices

The *Sure*Servo™ Serial Comm Port supports RS-232/422/485 communications. The drive can be set up to communicate on standard Modbus networks using ASCII or RTU transmission modes. Using the drive's Communication Protocol parameters, you can select the desired mode, data bits, parity, and stop bits. The communication parameters must be the same for all devices on a Modbus network.

Most drive parameters can be written to or updated from a master controller using Modbus communications. However, the drive's operational "run" commands (i.e Servo On, Command Trigger, RESET, etc) can only be executed by controlling the drive's physical digital inputs.

IEEE 1394 Plug Connector

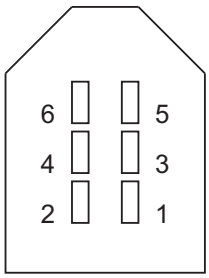

Serial Comm Port

RS-232/422/485 Interface

1: GND (0V)
2: RS-232 TX
3: RS-422 RX+
4: RS-232 RX, RS-422 RX-
5: RS-422 TX+
6: RS-422 TX-

*Sure*Servo™ Block Transfer Function

A group of Status Monitor Registers (P0-04 to P0-08) and a group of Block Data Registers (P0-09 to P0-16) are available in the *Sure*Servo drive. These continuous block of registers can be used to "group" miscellaneous drive parameters together allowing you to read/write the desired parameters in one block instead of having to use a Read/Write command for each parameter.

P2-30 – setting this parameter to (5) will disable "parameter write to EEPROM" each time communications is attempted with the drive (default 0). This parameter setting is not retained when power is disconnected from the drive.

*Sure*Servo *drives have a provision for shutting down control power to the output of the drive in the event of a communications timeout. This is set up using drive parameters P3-03 and P3-04, along with a digital output configured for servo fault alarm.*

Common Modbus RTU Masters

- KEP***Direc***t for PLCs (serial communications only)
- Think & Do Live 5.6, Studio 7.2.1 (serial communications only)
- MODSCAN from www.wintech.com

For additional technical assistance, go to our Technical support home page at: http://support.automationdirect.com/technotes.html

Modbus Protocol Modes

This section explains the specifics of the Modbus protocols. It is not necessary to use this information if your drive control is capable of serving as a Modbus master controller.

ASCII Mode:

Each 8-bit data is the combination of two ASCII characters. For example, a 1-byte data: 64 Hex, shown as '64' in ASCII, consists of '6' (36Hex) and '4' (34Hex).

The following table shows the available hexadecimal characters and their corresponding ASCII codes.

Character	‘0’	‘1’	‘2’	‘3’	‘4’	‘5’	‘6’	‘7’
ASCII Code	30H	31H	32H	33H	34H	35H	36H	37H
Character	‘8’	‘9’	‘A’	‘B’	‘C’	‘D’	‘E’	‘F’
ASCII Code	38H	38H	41H	42H	43H	44H	45H	46H

RTU Mode:

Each 8-bit data is the combination of two 4-bit hexadecimal characters. For example, a 1-byte data: 64 Hex.

Modbus ASCII and RTU Data Format

10-bit character frame (For 7-bit character):

P3-02 = 00: ASCII mode (**7** data bits, no parity, 2 stop bits)

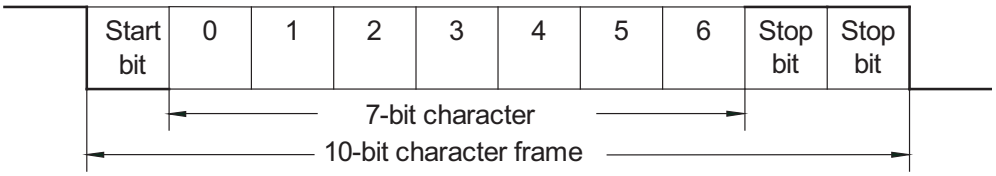

P3-02 = 01: ASCII mode (7 data bits, even parity, 1 stop bit)

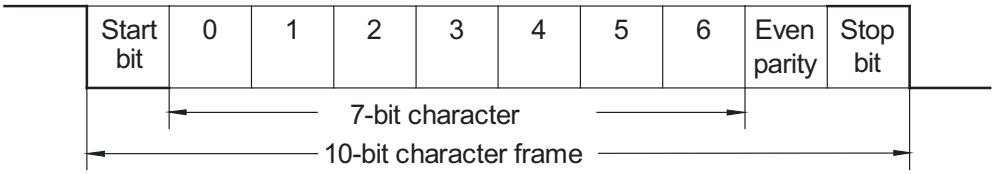

P3-02 = 02: ASCII mode (**7** data bits, odd parity, 1 stop bit)

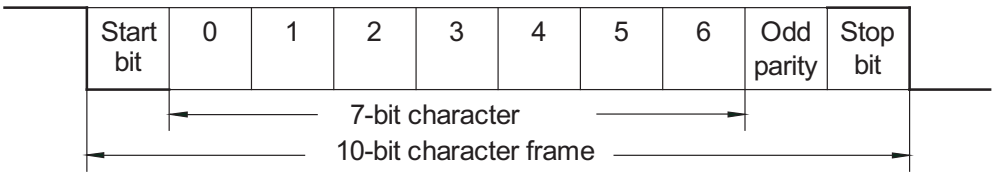

Data Formats (Cont.)

11-bit character frame (For 8-bit character):

P3-02 = 03: ASCII mode (**8** data bits, no parity, 2 stop bits)
P3-02 = 06: RTU mode (**8** data bits, no parity, 2 stop bits)

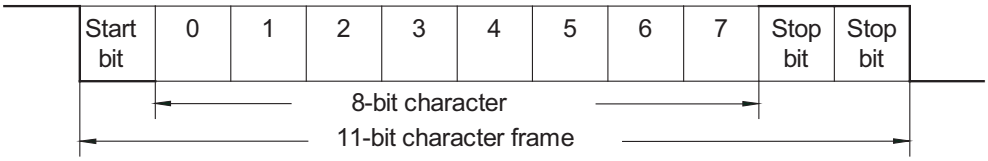

P3-02 = 04: ASCII mode (**8** data bits, even parity, 1 stop bit)
P3-02 = 07: RTU mode (**8** data bits, even parity, 1 stop bit)

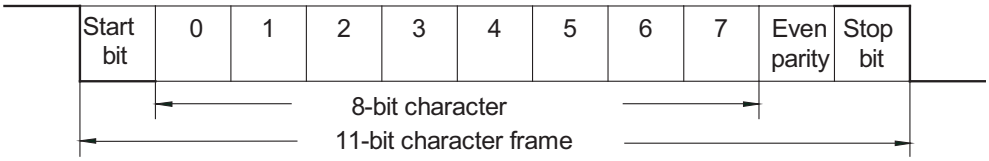

P3-02 = 05: ASCII mode (**8** data bits, odd parity, 1 stop bit)
P3-02 = 08: RTU mode (**8** data bits, odd parity, 1 stop bit)

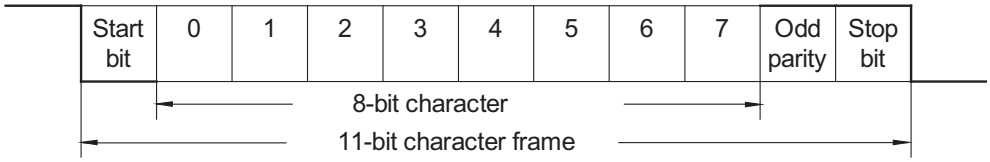

Communication Protocol

Modbus ASCII Mode:

STX	Start Character: (3AH)
ADR 1	Communication Address: 8-bit address consists of 2 ASCII codes
ADR 0	
CMD 1	
CMD 0	
DATA (n-1)	Contents of data: n x 8-bit data consists of 2n ASCII codes. n[]25 maximum of 50 ASCII codes
.....	
DATA 0	
LRC CHK 1	LRC check sum: 8-bit check sum consists of 2 ASCII codes
LRC CHK 0	
END 1	END characters: END 1=CR (0DH), END 0 =LF (0AH)
END-0	

Modbus RTU Mode:

START	A silent interval of more than 10 ms
ADR	Communication Address: 8-bit address
CMD	
DATA (n-1)	Contents of data: n x 8-bit data,n<=25
.....	
DATA 0	
CRC CHK Low	CRC check sum: 16-bit check sum consists of 2 8-bit characters
CRC CHK High	
END	A silent interval of more than 10 ms

ADR (Communication Address)

Valid communication addresses are in the range of 0 to 254. A communication address equal to 0 means broadcast to all *Sure*Servo drives. In this case, the drive will not reply any message to the master device.

For example, communication to drive with address 16 decimal:

Modbus ASCII mode: (ADR 1, ADR 0)='1','0' => '1'=31H, '0'=30H
Modbus RTU mode: (ADR)=10H

CMD (Command) and DATA (data characters)

The format of data characters depends on the command code. The available command codes are described as follows: Command code: 03H, read N words. The maximum value of N is 10. For example, reading continuous 2 words from starting address 0200H of drive with address 01H.

Modbus ASCII mode:

Command Message	
STX	':'
ADR 1	'0'
ADR 0	'1'
CMD 1	'0'
CMD 0	'3'
Starting data address	'0'
	'2'
	'0'
	'0'
Number of data (Count by word)	'0'
	'0'
	'0'
	'2'
LRC CHK 1	'F'
LRC CHK 0	'8'
END 1	CR
END 0	LF

Response Message	
STX ':'	':'
ADR 1	'0'
ADR 0	'1'
CMD 1	'0'
CMD 0	'3'
Number of data (Count by byte)	'0'
	'4'
Content of starting data address 0200H	'0'
	'0'
	'B'
	'1'
Content data address 0201H	'1'
	'F'
	'4'
	'0'
LRC CHK 1	'E'
LRC CHK 0	'8'
END 1	CR
END 0	LF

Modbus RTU mode:

Command Message	
ADR	01H
CMD	03H
Starting data address	02H
	00H
Number of data (Count by word)	00H
	02H
CRC CHK Low	C5H
CRC CHK High	B3H

Response Message	
ADR	01H
CMD	03H
Number of data (Count by byte)	04H
	'0'
Content of data address 0200H	00H
	B1H
Content of data address 0201H	1FH
	40H
CRC CHK Low	A3H
CRC CHK High	D4H

Command code: 06H, write 1 word

For example, writing 100(0064H) to address 0200H of drive with address 01H.

Modbus ASCII mode:

Command Message	
STX	':'
ADR 1	'0'
ADR 0	'1'
CMD 1	'0'
CMD 0	'6'
Data Address	'0'
	'2'
	'0'
	'0'
	'0'
	'0'
	'6'
	'4'
LRC CHK 1	'9'
LRC CHK 0	'3'
END 1	CR
END 0	LF

Response Message	
STX ':'	':'
ADR 1	'0'
ADR 0	'1'
CMD 1	'0'
CMD 0	'6'
Data Address	'0'
	'2'
	'0'
	'0'
Data Content	'0'
	'0'
	'6'
	'4'
LRC CHK 1	'9'
LRC CHK 0	'3'
END 1	CR
END 0	LF

Modbus RTU mode:

This is an example of using function code 16 for writing to multiple registers.

Command Message	
ADR	01H
CMD	10H
Starting data address	02H
	00H
Number of data (Count by byte)	04H
Content of data address 0200H	00H
	02H
Content of data address 0201H	02H
	58H
CRC CHK Low	CBH
CRC CHK High	34H

Response Message	
ADR	01H
CMD	10H
Starting data address	02H
	00H
Number of data (Count by word)	00H
	02H
CRC CHK Low	4AH
CRC CHK High	08H

CHK (check sum)

Modbus ASCII Mode:

LRC (Longitudinal Redundancy Check) is calculated by summing up module 256, the values of the bytes from ADR1 to last data character, then calculating the hexadecimal representation of the 2's-complement negation of the sum.

For example, reading 1 word from address 0201H of the drive with address 01H.

Command Message	
STX	':'
ADR 1	'0'
ADR 0	'1'
CMD 1	'0'
CMD 0	'3'
Starting data address	'0'
	'2'
	'0'
	'1'
Number of data (Count by word)	'0'
	'0'
	'0'
	'1'
LRC CHK 1	'F'
LRC CHK 0	'8'
END 1	CR
END 0	LF

01H+03H+02H+01H+00H+01H=08H,
the 2's complement negation of 08H is F8H.

Modbus RTU Mode:

Response Message	
ADR	01H
CMD	03H
Starting data address	02H
	01H
Number of data (Count by word)	00H
	02H
CRC CHK Low	6FH
CRC CHK High	F7H

CRC (Cyclical Redundancy Check) is calculated by the following steps:

Step 1: Load a 16-bit register (called CRC register) with FFFFH.

Step 2: Exclusive OR the first 8-bit byte of the command message with the low order byte of the 16-bit CRC register, putting the result in the CRC register.

Step 3: Shift the CRC register one bit to the right with MSB zero filling. Extract and examine the LSB.

Step 4: If the LSB of CRC register is 0, repeat step 3, else Exclusive or the CRC register with the polynomial value A001H.

Step 5: Repeat step 3 and 4 until eight shifts have been performed. When this is done, a complete 8-bit byte will have been processed

.Step 6: Repeat steps 2 to 5 for the next 8-bit byte of the command message.

Continue doing this until all bytes have been processed. The final contents of the CRC register equal the CRC value.

When transmitting the CRC value in the message, the upper and lower bytes of the CRC value must be swapped, i.e. the lower order byte will be transmitted first.

The following is an example of CRC generation using C language. The function takes two arguments:

Unsigned char* data ← a pointer to the message buffer
Unsigned char length ← the quantity of bytes in the message buffer

The function returns the CRC value as a type of unsigned integer.

```
Unsigned int crc_chk(unsigned char* data, unsigned char length){
  int j;
  unsigned int reg_crc=0xFFFF;
  while(length--){
     reg_crc ^= *data++;
     for(j=0;j<8;j++){
        if(reg_crc & 0x01){  /* LSB(b0)=1 */
           reg_crc=(reg_crc>>1) ^ 0xA001;
      }else{
           reg_crc=reg_crc >>1;
      }
    }
  }
 return reg_crc;
}
```

Modbus RTU mode is preferred. Limited support is available to Modbus ASCII users.

BLANK
PAGE

Maintenance and Troubleshooting

Chapter 7

In This Chapter ...

Maintenance and Inspection 7–2

Basic Inspection 7–2

Maintenance 7–3

Expected Life of Replacement Components 7–3

Troubleshooting 7–4

Fault & Warning Message Table 7–4

Fault Message Potential Causes and Corrective Actions 7–5

Warning Message Potential Causes and Corrective Actions 7–9

Clearing Faults 7–10

Maintenance and Inspection

*Sure*Servo™ AC servo drives are based on solid state electronics technology. Preventive maintenance is required to make sure the drive functions properly and has a long life. We recommend that periodic maintenance and inspection of the servo drive be performed by a qualified technician. Always turn off the AC input power to the unit before any maintenance and inspection.

WARNING: AC input power must be disconnected before performing any maintenance. Do not connect or disconnect wires or connectors to the servo drive or motor while power is applied to the circuit. Make sure that the internal capacitors have fully discharged (wait for the Charge LED to go off) before performing the maintenance and inspection! Maintenance must be performed by a qualified technician only.

WARNING: A charge with hazardous voltages may still remain in the DC-link capacitor even if the power has been turned off. To avoid personal injury, do not remove the cover of the AC servo drive. There are no user serviceable parts inside the drive.

Basic Inspection

Item	Inspection Content
General Inspection	Periodically inspect the mounting screws for the servo drive, motor shaft, terminal block, and the connection to mechanical system. Tighten screws as necessary; they may loosen due to vibration and temperature variation.
	Make sure that oil, water, metallic particles, or any foreign objects do not fall inside the servo drive, motor, control panel, or ventilation slots and holes.
	Make sure that the servo drive control panel has been installed correctly, and that it is free from airborne dust, harmful gases, or liquids.
	Make sure that all wiring instructions and recommendations are followed to prevent damage to the drive and/or motor.
Inspection before operation (Control power not applied)	Make sure control switch is OFF.
	Make sure that all wiring terminals are correctly insulated.
	Make sure that all wiring is correct to prevent damage and/or malfunction.
	Visually check to make sure that there are no unused screws, metal strips, or any conductive or flammable materials inside the drive.
	To avoid electric shock, be sure to connect the servo drive ground terminal to the control panel ground terminal. Before making any connection, wait 10 minutes for internal capacitors to discharge after power is disconnected.
	Never put flammable objects on servo drive or close to the external regenerative resistor.
	If the electromagnetic brake is being used, make sure that it is correctly wired.
	If required, use an appropriate electrical filter to eliminate noise to the servo drive.
	Make sure that the external applied voltage to the drive is correct and matched to the controller.
	Make sure that the cables are not damaged, stressed excessively, or loaded heavily. When the motor is *not* running, check the cables and connections for damage, fraying, or over extension.
Inspection during operation (Control power applied)	Check for abnormal vibrations and sounds during operation. If the servo motor is vibrating or there are unusual noises while the motor is running, shut the motor down. Disconnect input power before troubleshooting the motor.
	Make sure that all user-defined parameters are set correctly.
	Reset parameters when the servo drive is off to prevent servo system malfunction.
	Check the power indicators and LED display for abnormal conditions.

Maintenance

- Use and store servo system in a clean, dry, and normal-temperature environment.
- Periodically clean the surfaces and panel of servo drive and motor.
- Periodically check the resistance of the insulation with Meg-ohmmeter. The insulation resistance should measure at least 100 Meg-Ohms at 500 VDC and should be tested with a power cable connector properly connected to the motor.
- Periodically check the DC BUS filter capacitors and precharge relays after the warranty period, and replace if necessary.
- Periodically check the conductors or insulators for corrosion and/or damage.
- Do not disassemble or damage any mechanical part when performing maintenance.
- Periodically clean off any dust and dirt with a vacuum cleaner, especially the ventilation ports and printed circuit boards. Always keep these areas clean; accumulation of dust and dirt can cause overheating and component failures.

WARNING: To prevent serious injury or equipment damage, inspection and replacement of board-level components should be performed by qualified repair technicians experienced in board-level maintenance and repair.

Expected Life of Replacement Components

DC BUS Filter Capacitor

DC BUS filter capacitor life varies according to ambient temperature and operating conditions. Excessive ripple currents will shorten capacitor life. The expected life is ten years when properly used in a clean, dry, air-conditioned environment.

Precharge Relay

The contacts will wear due to switching current; the common expected relay life is 100,000 operations.

Cooling fan (SVA-2100 and SVA-2300 Models Only)

The cooling fan should be checked periodically for adequate air flow, which is essential to prevent damage to the power stage. Replace fan immediately if it is vibrating or making unusual noises.

Troubleshooting

Fault & Warning Message Table

Once a fault or error is detected, the corresponding protective fault functions will be activated and the fault messages will be displayed.

Fault/Warning Messages			
Display	**Fault/Warning Name**	**TYPE**	**Fault/Warning Description**
ALE 01	Overcurrent	Fault	Main circuit current is higher than 1.5 multiple of motor's instantaneous maximum current value.
ALE 02	Overvoltage	Fault	Main circuit voltage has exceeded its maximum allowable value. (Main circuit voltage is higher than specification.)
ALE 03	Undervoltage	Fault	Main circuit voltage has fallen below its minimum value. (Main circuit voltage is lower than specification.)
ALE 04	Motor overheated	Fault	The motor's operating temperature is higher than the upper-limit of the specification.
ALE 05	Regeneration error	Fault	Regeneration control operation is in error.
ALE 06	Overload	Fault	Servo motor and drive are overloaded.
ALE 07	Overspeed	Fault	Motor's control speed exceeds the limit set in P1-55.
ALE 08	Abnormal pulse control command	Fault	Input frequency of pulse command exceeds the limit of its allowable set value.
ALE 09	Excessive deviation	Fault	Position control deviation value exceeds the limit of its allowable set value.
ALE 10	Watch dog execution time out	Fault	Watch dog execution time out.
ALE 11	Position detector error	Fault	Pulse signal is in error.
ALE 12	Internal Components Require Calibration	Fault	Internal Components Require Calibration
ALE 13	Fault stop	Fault	Fault stop switch is activated.
ALE 14	Reverse limit error	Fault	DI setting 22 reverse limit switch is activated.
ALE 15	Forward limit error	Fault	DI setting 23 forward limit switch is activated.
ALE 16	IGBT temperature error	Fault	IGBT is overheated.
ALE 17	Memory error	Fault	EE-PROM write-in and read-out is in error.
ALE 18	DSP communication error	Fault	DSP communication is in error.
ALE 19	Serial communication error	Fault	RS232/422/485 communication is in error.
ALE 20	Serial communication time out	Fault	RS232/422/485 communication time out.
ALE 21	Command write-in error	Fault	Control command write-in error.
ALE 22	Input power phase loss	Fault	One phase of the input power is lost.
ALE 23	At Overload Output Warning Threshold	Warn	Motor overload exceeds the time % set in P1-56.

Fault Message Potential Causes and Corrective Actions

ALE 01: Overcurrent		
Potential Cause	**Checking Method**	**Corrective Actions**
Short-circuit at drive output	Check the wiring connections between drive and motor, and check cables for shorts.	Repair short-circuit.
Motor wiring error	Make sure the connections between the motor and drive are correct.	Follow the wiring steps in the user manual to reconnect wiring.
Control parameter setting error	Check if the set value exceeds the factory default setting.	Change the setting back to factory default, reset, and adjust the parameter setting again.
Control command setting error	Check if the control input command is unstable (fluctuating too much).	Make sure that input command frequency is stable and activate filter function.
IGBT error	Heat sink overheated.	Call Technical Support: 770-844-4200

ALE 02: Overvoltage		
Potential Cause	**Checking Method**	**Corrective Actions**
The main circuit voltage has exceeded its maximum allowable value (incorrect power input).	Use voltmeter to check whether the input voltage falls within the rated input voltage.	Use correct power supply.

ALE 03: Undervoltage		
Potential Cause	**Checking Method**	**Corrective Actions**
The main circuit voltage has fallen below its minimum value.	Check for proper input voltage wiring.	Correct input wiring as needed.
No input voltage at main circuit.	Use voltmeter to check whether input voltage at main circuit is normal.	Check input power supply, including switches and fuses.
Input power error (Incorrect power input)	Use voltmeter to check whether the input voltage is within the specified limit.	Use correct power supply.

ALE 04: Motor Overheated		
Potential Cause	**Checking Method**	**Corrective Actions**
Servo system is overloaded.	Use thermometer to check the motor temperature (motor external temperature should not be above 158°F), and check if servo system is overloaded.	Re-size the capacity of motor and drive or reduce system demands (decrease speed, increase accel/decel time).

ALE 05: Regeneration Error		
Potential Cause	**Checking Method**	**Corrective Actions**
Regenerative resistor is not connected.	Check the regenerative resistor wiring connections.	Connect regenerative resistor as needed.
Parameter setting error	Confirm the parameter setting and specifications of regenerative resistor.	Correctly reset parameter again.

ALE 06: Overload		
Potential Cause	**Checking Method**	**Corrective Actions**
The drive has exceeded its rated load during continuous operation.	Check for drive overloading.	Increase motor capacity or reduce load.
Control system parameter setting is incorrect.	Check for mechanical vibration.	Adjust gain value of control circuit.
	Accel/decel time setting is too fast.	Increase accel/decel time setting.
Motor and encoder wiring error.	Check the wiring of U, V, W and encoder.	Make sure all motor wiring is correct.

ALE 07: Overspeed		
Potential Cause	**Checking Method**	**Corrective Actions**
Speed input command is not stable (too much fluctuation).	Use signal detector to detect if input signal is abnormal.	Make sure that input command frequency is stable and activate filter function.
Over-speed parameter setting is defective.	Check if over-speed parameter setting value is too low.	Correctly set over-speed parameter setting.

ALE 08: Abnormal Pulse Control Command		
Potential Cause	**Checking Method**	**Corrective Actions**
Pulse command frequency is higher than rated input frequency.	Use pulse frequency detector to measure input frequency.	Correctly set the input pulse frequency.
Incorrect pulse stream for quadrature input.	Use oscilloscope to view incoming pulse stream.	Correct incoming pulse stream.

ALE 09: Excessive Deviation		
Potential Cause	**Checking Method**	**Corrective Actions**
Maximum deviation parameter setting is too small.	Check the maximum deviation parameter setting.	Increase parameter setting value.
Gain value is too small.	Check if the setting value is correct.	Correctly adjust gain value.
Torque limit is too low.	Check torque limit value.	Correctly adjust torque limit value.
There is an overload.	Check for overload condition.	Reduce external applied load or re-size the motor capacity.
Profile is too demanding.	Increase Accel/Decel times to see if ramp is too steep.	Increase Accel/Decel or resize motor capacity.
One or more Position Velocity parameter is set greater than the Maximum Velocity Limit parameter.	Check whether the value of any P2-36 ~ P2-43 is greater than the value of P1-55.	Set all of the Position Velocity parameters less than or equal to the Maximum Velocity LImit.

ALE 10: Watch Dog Execution Time Out		
Potential Cause	**Checking Method**	**Corrective Actions**
Watchdog execution error.	Check and reset the power supply.	If there are any abnormal conditions after resetting the power supply, call Technical Support: 770-844-4200

ALE 11: Position Dectector Error		
Potential Cause	**Checking Method**	**Corrective Actions**
Encoder wiring error.	Check to make sure the wiring is correct and that all connections are tight; refer to the wiring information in this user manual.	Correct any wiring errors.
Encoder is damaged.	Using oscilloscope, check encoder for damage.	Repair or replace motor.

ALE 12: Internal Components Require Calibration		
Potential Cause	**Checking Method**	**Corrective Actions**
Internal component calibration	Restore to default configuration.	If the error does not clear after restoring the drive to default settings, contact Technical Support: 770-844-4200

ALE 13: External Fault Stop		
Potential Cause	**Checking Method**	**Corrective Actions**
Fault stop input is activated.	Check if fault stop switch is On or Off.	Clear and reset fault input.

ALE 14: Reverse Limit Error		
Potential Cause	**Checking Method**	**Corrective Actions**
Reverse limit switch is activated.	Check if reverse limit switch is On or Off.	Move load in forward direction to deactivate limit switch, and reset fault.
Servo system is not stable.	Check the value of control parameter setting and load inertia.	Modify parameter setting and re-size motor capacity.

ALE 15: Forward Limit Error		
Potential Cause	**Checking Method**	**Corrective Actions**
Forward limit switch is activated	Check if forward limit switch is On or Off.	Move load in reverse direction to deactivate limit switch, and reset fault.
Servo system is not stable.	Check the value of control parameter setting and load inertia.	Modify parameter setting and re-size motor capacity.

ALE 16: IGBT Temperature Error		
Potential Cause	**Checking Method**	**Corrective Actions**
The drive has exceeded its rated load during continuous operation.	Check for an overload, or if the motor current is too high.	Increase motor capacity or reduce load.
Short-circuit at drive output	Check the drive input wiring.	Make sure it is wired correctly.

ALE 17: Memory Error		
Potential Cause	**Checking Method**	**Corrective Actions**
Data error in Memory read-out / write-in.	Reset parameter or power supply.	If the error does not clear after resetting the parameter or power supply, contact Technical Support: 770-844-4200.

ALE 18: DSP Communication Error		
Potential Cause	**Checking Method**	**Corrective Actions**
Control power error.	Check and reset control power.	If the error does not clear after resetting the power supply, contact Technical Support: 770-844-4200.

ALE 19: Serial Communication Error		
Potential Cause	**Checking Method**	**Corrective Actions**
Communication parameter setting is not correct.	Check communication parameter setting.	Set parameter setting to correct value.
Communication address is not correct.	Check communication address.	Set communication address to correct value.
Communication setting value is not correct.	Check read-out and write-in value.	Set communication setting to correct value.

ALE 20: Serial Communication Time Out		
Potential Cause	**Checking Method**	**Corrective Actions**
Set value in time out parameter is not correct.	Check the time out parameter setting.	Set parameter to correct value.
Not receiving communication command.	Check whether communication cable is loose or broken	Tighten or repair communication cable.

ALE 21: Command Write-in Error		
Potential Cause	**Checking Method**	**Corrective Actions**
Control power supply error.	Check and reset control power supply.	If the error does not clear after resetting the power supply, contact Technical Support: 770-844-4200.

ALE 22: Input Power Phase Loss		
Potential Cause	**Checking Method**	**Corrective Actions**
Input power error.	Check for poor input power line connection, or for possible loss of phase on input power line.	Correctly connect three-phase power.

Warning Message Potential Causes and Corrective Actions

ALE 23 (Warning): At Overload Output Warning Threshold		
Potential Cause	**Checking Method**	**Corrective Actions**
Overload time exceeds the Overload Output Warning Treshold.	Check value of P1-56 overload time.	This ALE is a warning, rather than a fault. It does not have to be cleared.

Clearing Faults

Display	Fault Name	How to Clear Fault
ALE 05	Regeneration error	Turn Alarm Reset (DI signal) ON to clear the fault.
ALE 06	Overload	Turn Alarm Reset (DI signal) ON to clear the fault.
ALE 07	Overspeed	Turn Alarm Reset (DI signal) ON to clear the fault.
ALE 08	Abnormal pulse control command	Turn Alarm Reset (DI signal) ON to clear the fault.
ALE 09	Excessive deviation	Turn Alarm Reset (DI signal) ON to clear the fault.
ALE 10	Watch dog execution time out	This fault information cannot be cleared.
ALE 11	Position detector error	This fault condition can be removed (or reset) only by cycling control power to the servo drive.
ALE 12	Internal Components Require Calibration	Restore to default configuration.
ALE 13	Fault stop	This fault information can be removed automatically by resetting Fault Stop Input (DI signal).
ALE 14	Forward limit error	Move load in forward direction to deactivate limit switch. Turn Alarm Reset (DI signal) ON or turn off the servo drive to clear the fault.
ALE 15	Reverse limit error	Move load in forward direction to deactivate limit switch. Turn Alarm Reset (DI signal) ON or turn off the servo drive to clear the fault.
ALE 16	IGBT temperature error	Turn Alarm Reset (DI signal) ON to clear the fault.
ALE 17	Memory error	Turn Alarm Reset (DI signal) ON to clear the fault.
ALE 18	DSP communication error	Turn Alarm Reset (DI signal) ON to clear the fault.
ALE 19	Serial communication error	Turn Alarm Reset (DI signal) ON to clear the fault.
ALE 20	Serial communication time out	Turn Alarm Reset (DI signal) ON to clear the fault.
ALE 21	Command write-in error	Turn Alarm Reset (DI signal) ON to clear the fault.
ALE 22	Input power phase loss	Turn Alarm Reset (DI signal) ON to clear the fault.
ALE 23	At Overload Output Warning Threshold	This ALE is a warning rather than a fault, and therefore does not have to be cleared.
For drive firmware v2.10 and higher, active faults can be **reset** from the keypad. Press and hold the UP and DOWN Arrow Keys simultaneously for two seconds to clear the fault.		

*Sure*Servo™ Quick Start Guide

Appendix A

In This Appendix ...

Quick Start for *Sure*Servo™ Drives A–2

Spin the Motor A–2

Position Mode Quick Start (Pt & Pr) A–4

Velocity Mode Quick Start (V & Vz) A–8

Torque Mode Quick Start (T & Tz) A–10

Tuning Quick Start for *Sure*Servo™ Drives A–12

Tuning Overview A–12

PDFF Adaptive Auto-Tune Mode Adjustments A–12

Quick Start for *Sure*Servo™ Drives

This guide allows you to get your *Sure*Servo motor and drive up and running as quickly as possible. This is not a substitute for reviewing the entire manual. You will need to familiarize yourself with the complete feature set of the drive. This quick start guide will serve as initial setup only.

WARNING: To prevent serious injury or damage to equipment, always start any new servo setup with the motor shaft disconnected from the load. The quick start will bypass mechanical overtravels and overrides. DISCONNECT THE LOAD. Always wire an E-Stop circuit into the power feed for the drive. Always drop the main incoming power for E-Stop conditions; control power can remain ON.

The Quick Start Guide is divided into four sections:

- Spin the Motor
- Position Mode Quick Start
- Velocity Mode Quick Start
- Torque Mode Quick Start

Spin the Motor

The first thing you want to do with the *Sure*Servo is spin the motor. This section will verify that all the components and cabling are working properly by allowing you to JOG the motor. These simple steps will get your *Sure*Servo system up and moving:

1. **Disconnect the motor from any load**. Connect the motor cables to the motor and drive. Make sure to connect the motor ground. Do not connect CN1, the I/O connector.
2. **Wire the appropriate fusing and an E-stop contactor to the drive**. See Chapter 2 for wiring information. Make sure to connect an external ground to the drive (large, multi-strand conductors are recommended). Verify that the E-Stop contactor functions properly before plugging the power connector into the drive.
3. **Power up the drive.** There will be errors. ALE 14 and ALE 15 are Alarm Errors for the Overtravel Limit switches (see Chapter 7 for explanation; they are NC by default).
4. **Set Parameter P2-08 to 10.** This will reset the drive to factory defaults. Press **MODE,** then press **NEXT** until **P2-00** appears. Press **ARROW-UP** until **P2-08** appears. Press **ENTER**. Press **ARROW-UP** until you enter a value of 10. Press **ENTER** to accept. See Chapter 3 for additional keypad help. If using *Sure*Servo Pro software (recommended), the drive communication defaults to 19.2k, 8, 0, 1, MODBUS RTU, Node 1 (this is the software default, too).
   Note: For each parameter change in the software, you must download all settings to the drive.

P2-08	Password (and Factory Default)
10	Reset Drive to Factory Defaults

5. **Set the appropriate motor code in P1-31.**
   Refer to the "Servo Drive Parameters" chapter for details.

P1-31	Motor Code
10 = 100 W	21 = 1 kW (low inertia)
11 = 200 W	22 = 1 kW (medium inertia)
12 = 400 W	30 = 2 kW
20 = 750 W	31 = 3 kW

** For SureServo drives with firmware version 2.103, execute Step 6.
For previous firmware versions, skip Step 6 and proceed to Step 7.

6. (for **firmware v2.103 only**)
   Disable Digital Input 8 (DI8) by changing the value in **P2-17** to zero.
   Refer to "Servo Drive Parameters" chapter for details.
7. **Cycle Power to the Drive.**
8. **Set Parameter P2-30 to 1.** This temporarily overrides Servo Enable, CW Limit, and CCW Limit. Make sure the motor is disconnected from the load.

P2-30	Auxiliary Function
1	Force Servo to be Enable (regardless of input status)

9. **Jog the motor.** For Keypad operation: Go to **P4-05**, JOG Operation. Press **ENTER**. This is the JOG speed setpoint. Adjust this to the desired jogging speed. (**NEXT** will move the cursor to the left.) Press **ENTER**. The LED display will show "JOG". Press the **UP-ARROW** or **DOWN-ARROW** to Jog the motor forward or reverse. Press **MODE** to exit the JOG operation.

P4-05	JOG Operation
100	Jog the motor at 100 rpm when the JOG signal is active

   If the motor run, stop, and direction behavior is not as expected, then recheck the motor power wiring at the drive U, V, W, and ground terminals. (Refer to Chapter 2 for wire color and terminal connection information.)
10. **Cycle Control Power to the drive.** This will reset **P2-30**, re-enabling the Servo Enable, CW Limit, and CCW Limit inputs.

Position Mode Quick Start (Pt & Pr)

This section explains the basic procedures necessary to control the *Sure*Servo drive in Position Mode; both pulse input (Pt) and internal positioning (Pr). In Pt mode, positioning commands come from high-speed pulse trains from the terminals. In Pr mode, positioning commands are held in internal registers.

Pt Mode - High-Speed Pulse Input (Position - terminals)

1. **Spin the Motor.** Follow the instructions in the previous section to verify that the motor and drive are functioning properly. Cycle power to the drive. At this point, power, fusing, and an E-stop contactor should all be wired appropriately (see Chapter 2 for wiring information). The motor code in **P1-31** should be set to the correct motor type.

2. **Set the Pulse Type and Control Mode. P1-00** selects the type of pulse stream that will come into the drive. **P1-01** selects the actual control mode: 0000 will result in Pt mode with the motor spinning CCW as forward. The second MSB selects direction. Note: 0101 will result in Pt mode with motor spinning CW as forward.

P1-00	External Input Pulse Type (See Chapter 2 and Appendix C for encoder wiring details.)
000	Quadrature Input - A, /A, B, /B (typical encoder input signals)
001	CW + CCW pulse input
002	Pulse + Direction
See the "Servo Drive Parameters" chapter for more information regarding Positive vs. Negative signals, forward/reverse, etc.	

P1-01	Control Mode and Output Direction
0000	Drive accepts Position Control via external pulse inputs with CW direction.
0100	Drive accepts Position Control via external pulse inputs with CCW direction.
See the "Servo Drive Parameters" chapter for more information regarding changing directions, dual modes, etc.	

3. **Configure the Digital Inputs.** Select which DI (digital inputs) your system will require. See **P2-10** through **P2-17** to select the correct configuration (these parameters set NO/NC and the functionality of each input). A minimum configuration should contain at least Servo Enable, Alarm Reset, Fault Stop, and CW/CCW limits (if your system has overtravels). Once these settings are configured, cycle power to the drive for them to take effect. The motor should now follow the incoming pulses when the servo is enabled, so when you turn the encoder shaft the servo motor will follow the movement.

P2-10 Through P2-17		Digital Input Definition	
P2-10	101	DI1 = Servo Enable	Normally Open
P2-14	102	DI5 = Alarm Reset	Normally Open
P2-15	022	DI6 = Reverse Overtravel (set to 000 to disable this input)	Normally Closed
P2-16	023	DI7 = Forward Overtravel (set to 000 to disable this input)	Normally Closed
P2-17	121	DI8 = Fault Stop	Normally Open
See the "Servo Drive Parameters" chapter for more information regarding normally open vs. normally closed, additional functions, etc.			

4. **Gearing.** Electronic Gearing can be set in **P1-44** (Numerator) and **P1-45** (Denominator). Default setting is 1/1 (1 incoming pulse = motor movement of 1 count). Note: One revolution of a 2500ppr quadrature encoder (A, /A, B, /B) will actually cause the motor to rotate one entire revolution since the *Sure*Servo treats each transitional edge as an input (2500ppr x 4 = 10,000 = 1 motor rev).

Pr Mode - Internal Indexing (Position - registers)

1. **Spin the Motor.** Follow the instructions in the previous section to verify that the motor and drive are functioning properly. Cycle power to the drive. At this point, power, fusing, and an E-stop contactor should all be wired appropriately according to Chapter 2. The motor code in **P1-31** should be set to the correct motor type.
2. **Set the Control Mode. P1-01** selects the actual control mode: 0001 will result in Pr mode with the motor spinning CCW as forward. The second MSB selects direction. Note: 0101 will result in Pr mode with motor spinning CW as forward.

P1-01	Control Mode and Output Direction
0001	Drive is in Internal Indexing Mode. Setpoints are internal registers selected via Digital Inputs with CCW direction.
0101	Drive is in Internal Indexing Mode. Setpoints are internal registers selected via Digital Inputs with CW direction.
See the "Servo Drive Parameters" chapter for more information regarding changing directions, dual modes, etc.	

3. **Configure the Basic Digital Inputs.** Select which digital inputs your system will require. See **P2-10** through **P2-17** to select the correct configuration (these parameters set NO/NC and the functionality of each input). A minimum configuration should contain at least Servo Enable, Alarm Reset, and CW/CCW limits (if your system has overtravel limits).

P2-10 Through P2-17		Digital Input Definition	
P2-10	101	DI1 = Servos On	Normally Open
P2-14	102	DI5 = Alarm Reset	Normally Open
P2-15	022	DI6 = Reverse Overtravel (set to 000 to disable this input)	Normally Closed
P2-16	023	DI7 = Forward Overtravel (set to 000 to disable this input)	Normally Closed
P2-17	121	DI8 = Fault Stop	Normally Open
See the "Servo Drive Parameters" chapter for more information regarding normally open vs. normally closed, additional functions, etc.			

4. **Configure the position selection.** The drive can be configured to select the internal Position setpoint by 3 digital inputs; POS0, POS1, and POS2. Any of the digital inputs can be set as POS0 (code 11), POS1 (code 12), or POS2 (code 13) in **P2-10** through **P2-17**. By configuring all 3 inputs, all of the 8 internal presets can be selected via external signals.

   To save digital inputs for other uses, not all POSx's have to be configured. If only two setpoints are needed (for example: the motor needs to move and then return), then only one POSx needs to be configured. Configuring only input POS2 (POS0 and POS1 not assigned) would allow the selection of Position 1 and Position 5.

   Or, if you will be writing to the Modbus address of Position 0 to change the setpoint after each index, no digital inputs have to be used at all. Disabling the inputs causes them to act as if they were inactive, so when all POSx inputs are disabled = Position 1. One input, however, should be selected as the Command Trigger (code 08). When pulsed, this input will cause the drive to move to the selected setpoint position.

P2-10 Through P2-17		Digital Input Definition	
P2-11	111	DI2 = POS0 (bit 0 of the binary code to select internal setpoints)	Normally Open
P2-12	112	DI3 = POS1 (bit 1 of the binary code to select internal setpoints)	Normally Open
P2-13	108	DI4 = Command Trigger	Normally Open
Defining POS0 and POS1 will allow selection of Positions 1-4. See the "Servo Drive Parameters" chapter for more information regarding normally open vs. normally closed, additional functions, etc.			

5. **Configure the Position Setpoints.** Parameter **P1-33** selects Incremental or Absolute mode. Enter a value of "0" for Absolute Mode or enter "1" for Incremental mode. Parameters (**P1-15** through **P1-30**) determine the setpoints of Positions 1 through 8. Each setpoint has 2 parts; motor revolutions and pulses. One motor revolution consists of 10,000 counts. So, to move the motor Incrementally 3-½ turns (or to Absolute position 3-½ revs from home), place a 3 in the first position parameter and a 5000 into the second.

P1-33	Position Control Mode
0	Absolute Mode - Each index will cause the motor to move to (or stay at) an absolute position.
1	Incremental Mode - Each index will cause the motor to advance by the commanded amount.
See the "Servo Drive Parameters" chapter for more information regarding different modes, resolution, etc.	

P1-15 Through P1-30		Position Setpoints
P1-15	3	Index #1 - Motor Revolutions
P1-16	5000	Index #1 - Motor Counts (out of 10,000 counts per 1 revolution.
The above settings will cause the motor to move 3-1/2 revolutions when POSx inputs are OFF and the Command Trigger is pulsed. See the "Servo Drive Parameters" chapter for more information regarding different modes, resolution, etc.		

6. **Configure Accel, Decel, and Speeds. P1-34** and **P1-35** are the Acceleration and Deceleration parameters (accel time in ms from 0 rpm to P1-55 max velocity limit, and decel time from max velocity limit to 0 rpm). **P1-36**, Accel/Decel S-Curve Time (ms), must be set to a non-zero number for accel and decel to take effect. *Without adjusting the 3 acc/dec parameters, the drive may fault when first moved.* Parameters **P2-36** through **P2-43** are the 8 speed settings that correspond to the 8 position setpoints. Their default is 1000 rpm. Once all of the above parameters are configured, cycle power to the drive. The drive should now respond to the Command Trigger Input.

P1-34 Through P1-36		Acceleration, Deceleration, and S-Curve
P1-34	200	Acceleration Time (in ms)
P1-35	200	Deceleration Time (in ms)
P1-36	50	S-Curve Time (in ms) - This setting must be non-zero for Acceleration/Deceleration to take effect.
See the "Servo Drive Parameters" chapter for more information regarding ranges, etc.		

P2-36 Through P2-43		Index Speeds
P2-36	1000	Speed for Index #1 (in rpm). All speed settings are 1000 rpm default.
See the "Servo Drive Parameters" chapter for more information regarding ranges, etc.		

POS2	POS1	POS0	Position Setpoint	Velocity
0	0	0	Position 1 = P1-15, P1-16	Velocity 1 = P2-36
0	0	1	Position 2 = P1-17, P1-18	Velocity 2 = P2-37
0	1	0	Position 3 = P1-19, P1-20	Velocity 3 = P2-38
0	1	1	Position 4 = P1-21, P1-22	Velocity 4 = P2-39
1	0	0	Position 5 = P1-23, P1-24	Velocity 5 = P2-40
1	0	1	Position 6 = P1-25, P1-26	Velocity 6 = P2-41
1	1	0	Position 7 = P1-27, P1-28	Velocity 7 = P2-42
1	1	1	Position 8 = P1-29, P1-30	Velocity 8 = P2-43
NOTE: If a POSx selector is not defined, it has a value of 0 (off).				

Velocity Mode Quick Start (V & Vz)

1. **Spin the Motor.** Follow the instructions in the previous section to verify that the motor and drive are functioning properly. Cycle power to the drive. At this point, power, fusing, and fault stop should all be wired appropriately; see Chapter 2 for wiring information. The **P1-31** motor code should be set to the correct motor type.
2. **Set the Control Mode. P1-01** selects the actual control mode; 0002 will result in analog/preset Velocity mode with the motor spinning CCW as forward. (The second MSB selects direction.) Vz Mode (internal velocity presets only) can be selected by entering 0004.

P1-01	Control Mode and Output Direction
xx02	Drive is in Velocity Mode V. Drive Speed is determined via analog signal or by internal presets.
xx04	Drive is in Velocity Mode Vz. Speed is determined by internal presets only.
See the "Servo Drive Parameters" chapter for more information regarding changing directions, dual modes, etc.	

3. **Configure the Digital Inputs.** Select which DI (digital inputs) your system will require. See **P2-10** through **P2-17** to select the correct configuration (these parameters set NO/NC and the functionality of each input). A minimum configuration should contain at least Servo Enable, Alarm Reset, Fault Stop, and CW/CCW limits (if your system has overtravels). If you want to be able to select Preset Speeds, you must also configure inputs for SPD0 and SPD1 (to be able to select the speed setpoints through binary code). Once these settings are configured, cycle power to the drive for them to take effect.

P2-10 Through P2-17		Digital Input Definition	
P2-10	101	DI1 = Servo Enable	Normally Open
P2-11	114	DI2 = SPD0 (bit 0 of the binary code to select the desired speed)	Normally Open
P2-12	115	DI3 = SPD1 (bit 1 of the binary code to select the desired speed)	Normally Open
P2-14	102	DI5 = Alarm Reset	Normally Open
P2-15	022	DI6 = Reverse Overtravel (set to 000 to disable this input)	Normally Closed
P2-16	023	DI7 = Forward Overtravel (set to 000 to disable this input)	Normally Closed
P2-17	121	DI8 = Fault Stop	Normally Open
See the "Servo Drive Parameters" chapter for more information regarding normally open vs. normally closed, additional functions, etc.			

4. **Configure the Velocity Setpoints (if using Preset Velocities). P1-09, P1-10,** and **P1-11** are the three Velocity Setpoints that can be selected via the digital inputs. When the digital inputs are both inactive, the speed command will be the +/-10V analog input command if in V mode. If the drive is in Vz mode, the command speed will be absolute zero (to allow for a "no drift" command).

P1-09 Through P1-11		Internal Speed Setpoints
P1-09	100	1st Velocity Command (SPD1 = OFF; SPD0 = ON)
P1-10	200	2nd Velocity Command (SPD1 = ON; SPD0 = OFF)
P1-11	300	3rd Velocity Command (SPD1 = ON; SPD0 = ON)
If both SPD0 and SPD1 are OFF, the drive will follow the analog input. See the "Servo Drive Parameters" chapter for more information regarding normally open vs. normally closed, additional functions, etc.		

5. **Configure Accel, Decel, and Speeds. P1-34** and **P1-35** are the Acceleration and Deceleration parameters (accel time in ms from 0 rpm to P1-55 max velocity limit, and decel time from max velocity limit to 0 rpm). **P1-36**, Accel/Decel S-Curve Time (ms), must be set to a non-zero number for accel and decel to take effect. *Without adjusting the 3 acc/dec parameters, the drive may fault when first moved.*

P1-34 Through P1-36		Acceleration, Deceleration, and S-Curve
P1-34	200	Acceleration Time (in ms)
P1-35	200	Deceleration Time (in ms)
P1-36	50	S-Curve Time (in ms) - This setting must be non-zero for Acceleration/Deceleration to take effect.
See the "Servo Drive Parameters" chapter for more information regarding ranges, etc.		

6. **Enable the Drive and Apply the Velocity Command.** If no errors exist, the drive should now follow the commanded velocity when enabled. With the Digital Inputs for Velocity Command Select Inputs SPD0 and SPD1 both inactive (or undefined), the drive should respond to an analog input signal if configured for V mode (if configured for Vz mode, both inputs inactive = zero speed). For both V and Vz modes, the drive should move at the preset speeds when Velocity Command Select Inputs SPD0 and SPD1 are set appropriately.

SPD1	SPD0	Velocity Setpoint
0	0	Vz Mode = 0 (zero) V Mode = Analog signal
0	1	1st Velocity Command = P1-09
1	0	2nd Velocity Command = P1-10
1	1	3rd Velocity Command = P1-11
NOTE: If SPD1 or SPD0 are not defined, their value is 0 (off).		

Torque Mode Quick Start (T & Tz)

1. **Spin the Motor.** Follow the instructions in the previous section to verify that the motor and drive are functioning properly. Cycle power to the drive. At this point, power, fusing, and E-stop should all be wired appropriately. The motor code in **P1-31** should be set to the correct motor type.

2. **Set the Control Mode. P1-01** selects the actual control mode; 0003 will result in analog/preset Torque mode with the motor spinning CCW as forward. (The second MSB selects direction.) Tz Mode (internal torque presets only) can be selected by entering 0005.

P1-01	Control Mode and Output Direction
xx03	Drive is in Torque Mode T. Drive torque is determined via analog signal or by internal presets.
xx05	Drive is in Torque Mode Tz. Drive torque is determined by internal presets only.
See the "Servo Drive Parameters" chapter for more information regarding changing directions, dual modes, etc.	

3. **Configure the Digital Inputs.** Select which DI (digital inputs) your system will require. See **P2-10** through **P2-17** to select the correct configuration (these parameters set NO/NC and the functionality of each input). A minimum configuration should contain at least Servo Enable, Alarm Reset, Fault Stop, and CW/CCW limits (if your system has overtravels). If you want to be able to select Preset Torques, you must also configure inputs for Torque Command Inputs TCM0 and TCM1 (to be able to select the Torque setpoints through binary code). Once these settings are configured, cycle power to the drive for them to take effect.

P2-10 Through P2-17		Digital Input Definition	
P2-10	101	DI1 = Servo Enable	Normally Open
P2-11	116	DI2 = TCM0 (bit 0 of the binary code to select the desired torque)	Normally Open
P2-12	117	DI3 = TCM1 (bit 1 of the binary code to select the desired torque)	Normally Open
P2-14	102	DI5 = Alarm Reset	Normally Open
P2-15	022	DI6 = Reverse Overtravel (set to 000 to disable this input)	Normally Closed
P2-16	023	DI7 = Forward Overtravel (set to 000 to disable this input)	Normally Closed
P2-17	121	DI8 = Fault Stop	Normally Open
See the "Servo Drive Parameters" chapter for more information regarding normally open vs. normally closed, additional functions, etc.			

4. **Configure the Torque Setpoints and Speed Limits. P1-12, P1-13,** and **P1-14** are the three Torque Setpoints that can be selected via the digital inputs. When the digital inputs are both inactive, the Torque command will be the +/-10V analog input command if in T mode. If the drive is in Tz mode, the command torque will be an absolute zero. **P1-02, P1-09, P1-10,** and **P1-11** set the speed limits that will be used in Torque mode. **P1-02** enables an analog Velocity limit when using the analog Torques signal. The other three parameters are velocity limits that correspond to Torque Presets 1, 2, and 3.

P1-12 Through P1-14		Internal Torque Setpoints
P1-12	30	1st Torque Command (TCM1 = OFF; TCM0 = ON)
P1-13	40	2nd Torque Command (TCM1 = ON; TCM0 = OFF)
P1-14	50	3rd Torque Command (TCM1 = ON; TCM0 = ON)
If both TCM0 and TCM1 are OFF, the drive will follow the analog input. See the "Servo Drive Parameters" chapter for more information regarding normally open vs. normally closed, additional functions, etc.		

5. **Configure Accel, Decel, and Speeds. P1-34** and **P1-35** are the Acceleration and Deceleration parameters (accel time in ms from 0 rpm to P1-55 max velocity limit, and decel time from max velocity limit to 0 rpm). **P1-36**, Accel/Decel S-Curve Time (ms), must be set to a non-zero number for accel and decel to take affect. *Without adjusting the 3 acc/dec parameters, the drive may fault when first moved.*

P1-34 Through P1-36		Acceleration, Deceleration, and S-Curve
P1-34	200	Acceleration Time (in ms)
P1-35	200	Deceleration Time (in ms)
P1-36	50	S-Curve Time (in ms) - This setting must be non-zero to Acceleration/Deceleration to take effect.
See the "Servo Drive Parameters" chapter for more information regarding ranges, etc.		

6. **Enable the Drive and Apply the Torque Command.** If no errors exist, the drive should now follow the commanded Torque when enabled. With the Digital Inputs for Torque Command Select Inputs TCM0 and TCM1 both inactive (or undefined), the drive should respond to an analog input signal if configured for T mode (if configured for Tz mode, both inputs inactive = zero Torque). For both T and Tz modes, the drive should move to the preset speeds when Torque Command Select Inputs TCM0 and TCM1 are set appropriately.

TCM1	TCM0	Torque Level
0	0	Tz Mode = 0 (zero) T Mode = Analog signal
0	1	1st Torque Command = P1-12
1	0	2nd Torque Command = P1-13
1	1	3rd Torque Command = P1-14
NOTE: If TCM1 or TCM0 are not defined, their value is 0 (off).		

Tuning Quick Start for *Sure*Servo™ Drives

Tuning Overview

After installing the *Sure*Servo system and testing its functionality (wiring, communication, motion, etc.), you may decide that the default tuning selection is either too responsive or not responsive enough for your application. This Quick Start Guide section will walk you through the very basic steps to adjust the drive tuning using the "PDFF Adaptive Auto-Tune Mode". Other tuning modes are explained in the "Control Modes of Operation and Tuning" Chapter of this manual.

The *Sure*Servo drive has three available modes of tuning: Manual, Easy, and Auto. (The Auto tuning mode includes two sub-modes: Adaptive Auto and Fixed Auto.) **Manual Tuning Mode** requires an in-depth knowledge of tuning parameters and the physical characteristics of the system, and it will not be covered in this Quick Start Guide. **Easy-Tune Mode** presets many of the tuning parameters and is useful when the system load (and inertia) changes significantly. Easy-Tune is helpful if the inertia mismatch ratio is not known. After Easy-Tuning, it may still be necessary to switch to a fixed mismatch ratio tuning method to fine-tune the system. **Auto-Tune Mode** is available in Adaptive and Fixed sub-modes. In Adaptive Auto-Tune Mode, the drive constantly monitors the load and adjusts the tuning parameters. In Fixed Auto-Tune Mode, the inertia and mismatch are known and entered by the user.

Refer to the "Control Modes of Operation and Tuning" chapter of this manual for more details and explanation of tuning the servo in all of the different modes, and how to select which mode is best for your application.

PDFF Adaptive Auto-Tune Mode Adjustments

The PDFF Adaptive Auto-Tune Mode (P2-32 = 4) constantly monitors the system load and inertia, and continually updates the tuning parameters. Besides P2-32, the only additional parameter that needs to be set by the user is P2-31, which determines the overall responsiveness of the servo system.

The actual load being controlled must be connected to the motor before performing tuning.

For Keypad Tuning

1) *Set P2-32 to "4"* (PDFF Adaptive Auto-Tune Mode).
   The drive must <u>not</u> be enabled for this change to occur.
2) *Enable the drive.*
3) *Write down the current value of P2-31* (response level). The value will be a two-digit number. Each digit is independent of the other, and each has a range of 0 to F (hex).
4) *Adjust the left (leading) digit* to change the responsiveness of the servo system. Increase this number to make the system more responsive, or decrease the number to make the system less responsive (more "sluggish"). If you increase the number too much, the system will become unstable and begin to vibrate. If you decrease the number too much, the system will not respond quickly enough to command signals.

If you cannot stabilize the drive using this method, try switching to a tuning mode with a fixed mismatch ratio such as P2-32 = 3 or 5. Adjust the parameters for that mode per Table 6-1 of the "Control Modes of Operation and Tuning" chapter. In the fixed mode, set P2-31 to the value the drive had previously calculated in the PDFF Adaptive Auto-Tune Mode.

For *Sure*Servo Pro Tuning

1) *Open the SureServo Pro software and "Connect" to the drive.* The software has the same default communication settings as does the drive. Refer to the 3-xx Communication Parameters section of the "Servo Drive Parameters" chapter for more information about communications parameters.
2) *Under "Utilities", select "Tuning Screen"* as shown below in the *Sure*Servo Pro screen capture.
3) *Confirm that the Tuning Mode is set for "4: PDFF Auto-Tuning (Continuous Adjustment)".* If not, disable the drive, change the setting in the software, and then press "Set". (This setting is cannot be changed when the drive is enabled.)
4) *Enable the drive.*
5) *Choose the desired "Response Level" of the drive.* Increase the value to make the system more responsive, or decrease the value to make the system less responsive. If you increase the value too much, the system will become unstable and begin to vibrate. If you decrease the value too much, the system will not respond quickly enough to command signals.
6) *Press "Click To Send New Settings To Drive".* The new settings take effect immediately. No other settings have to be changed.
7) If the response of the *Sure*Servo is not satisfactory, refer to the "Control Modes of Operation and Tuning" chapter for other tuning modes and more specific tuning instructions.

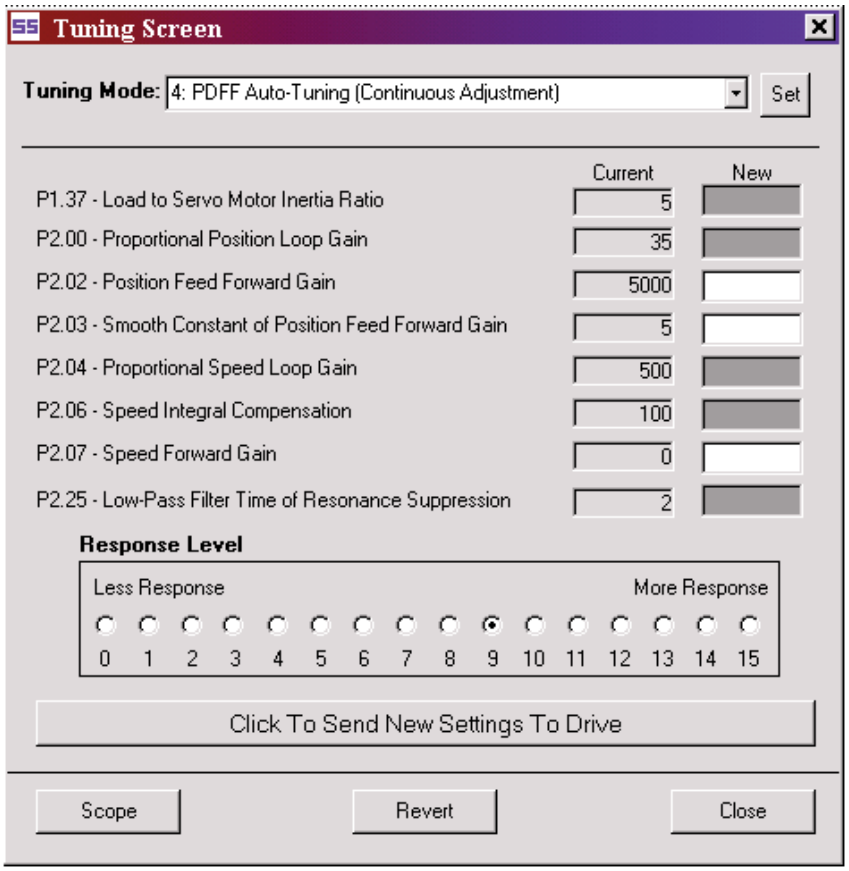

BLANK
PAGE

Selecting the *Sure*Servo™ Servo System

Appendix B

In This Appendix ...

Selecting the *Sure*Servo™ Servo System B–2

The Selection Procedure B–2
How many pulses from the PLC to make the move? B–2
What is the positioning resolution of the load? B–3
What is the indexing speed to accomplish the move time? B–3
Calculating the Required Torque B–4

Leadscrew - Example Calculations B–8

Step 1 - Define the Actuator and Motion Requirements B–8
Step 2 - Determine the Positioning Resolution of the Load B–8
Step 3 - Determine the Motion Profile B–9
Step 4 - Determine the Required Motor Torque B–9
Step 5 - Select and Confirm the Servo Motor and Driver System B–10

Belt Drive - Example Calculations B–11

Step 1 - Define the Actuator and Motion Requirements B–11
Step 2 - Determine the Positioning Resolution of the Load B–11
Step 3 - Determine the Motion Profile B–12
Step 4 - Determine the Required Motor Torque B–12
Step 5 - Select and Confirm the Servo Motor and Driver System B–13

Index Table - Example Calculations B–14

Step 1 - Define the Actuator and Motion Requirements B–14
Step 2 - Determine the Positioning Resolution of the Load B–14
Step 3 - Determine the Motion Profile B–15
Step 4 - Determine the Required Motor Torque B–15
Step 5 - Select and Confirm the Servo Motor and Driver System B–16

Engineering Unit Conversion Tables, Formulas, & Definitions B–17

Selecting the *Sure*Servo™ Servo System

The selection of your *Sure*Servo™ servo system follows a defined process. Let's go through the process and define some useful relationships and equations. We will use this information to work some typical examples along the way.

The Selection Procedure

The motor provides for the required motion of the load through the actuator (mechanics that are between the motor shaft and the load or workpiece). Key information to accomplish the required motion is:

- total number of pulses from the PLC
- positioning resolution of the load
- indexing speed (or PLC pulse frequency) to achieve the move time
- required motor torque (including the 25% safety factor)
- load to motor inertia ratio

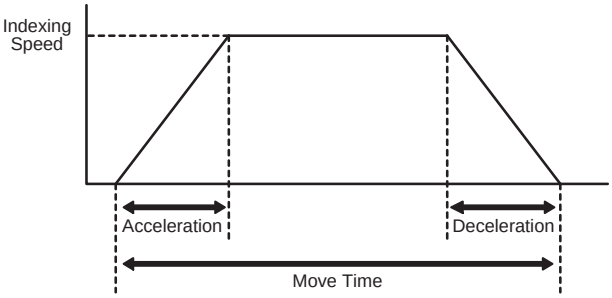

In the final analysis, we need to achieve the required motion with acceptable positioning accuracy.

How many pulses from the PLC to make the move?

The total number of pulses to make the entire move is expressed with the equation:

Equation ①: $\mathbf{P_{total} = total\ pulses = (D_{total} \div (d_{load} \div i)) \times \theta_{count}}$

$\mathbf{D_{total}}$ = total move distance

$\mathbf{d_{load}}$ = lead or distance the load moves per revolution of the actuator's drive shaft ($\mathbf{P}$ = pitch = $1/\mathbf{d_{load}}$)

θ_{count} = servo resolution (counts/rev_{motor}) (default = 10,000)

$\mathbf{i}$ = gear reduction ratio ($rev_{motor}/rev_{gearshaft}$)

Example 1: The motor is directly attached to a disk and we need to move the disk 5.5 revolutions. How many pulses does the PLC need to send to the driver?

$\mathbf{P_{total}}$ = (5.5 rev_{disk} ÷ (1 $rev_{disk}/rev_{driveshaft}$ ÷ 1 $rev_{motor}/rev_{driveshaft}$))
5.5 ÷ (1.0 ÷ 10) x 10,000 =550,000
x 10,000 counts/rev_{motor}
= 55,000 pulses

Example 2: The motor is directly attached to a ballscrew where one turn of the ballscrew results in 20 mm of linear motion and we need to move 45 mm. How many pulses do we need to send the driver?

$\mathbf{P_{total}}$ = (45 mm ÷ (20 mm/rev_{screw} ÷ 1 rev_{motor}/rev_{screw})) x 10,000 counts/rev_{motor}
=22,500 pulses

45 mm	1 rev_{screw}	1 rev_{motor}	10,000 pulses
move	20 mm	1 rev_{screw}	1 rev_{motor}

Example 3: Let's add a 2:1 belt reduction between the motor and ballscrew in example 2. Now how many pulses do we need to make the 45 mm move?

$\mathbf{P_{total}}$ = (45 mm ÷ (20mm/rev_{screw} ÷ 2 rev_{motor}/rev_{screw})) x 10,000 counts/rev_{motor}
= 45,000 pulses

What is the positioning resolution of the load?

We want to know how far the load will move for one command pulse. The equation to determine the positioning resolution is:

Equation ②: L_θ = load positioning resolution = (d_{load} ÷ i) ÷ θ_{count}

Example 4: What is the positioning resolution for the system in example 3?

L_θ = (d_{load} ÷ i) ÷ θ_{count}
= (20 mm/rev_{screw} ÷ 2 rev_{motor}/rev_{screw}) ÷ 10,000 counts/rev_{motor}
= 0.001mm/count
≈ 0.00004"/count

What is the indexing speed to accomplish the move time?

The most basic type of motion profile is a "start-stop" profile where there is no acceleration or deceleration period. This type of motion profile is only used for low speed applications because the load is "jerked" from one speed to another and the servo system may experience a position deviation error if excessive speed changes are attempted. The equation to find indexing speed for "start-stop" motion is:

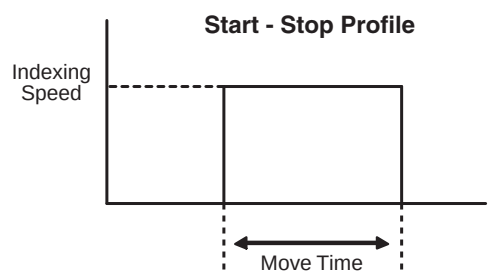

Equation ③: f_{SS} = indexing speed for start-stop profiles = P_{total} ÷ t_{total}

t_{total} = move time

Example 5: What is the indexing speed to make a "start-stop" move with 10,000 pulses in 800 ms?

f_{SS} = indexing speed = $P_{total} \div t_{total}$ = 10,000 pulses ÷ 0.8 seconds
= 12,500 Hz.

For higher speed operation, the "trapezoidal" motion profile includes controlled acceleration & deceleration and, in some cases, an initial non-zero starting speed. With the acceleration and deceleration periods equally set, the indexing speed can be found using the equation:

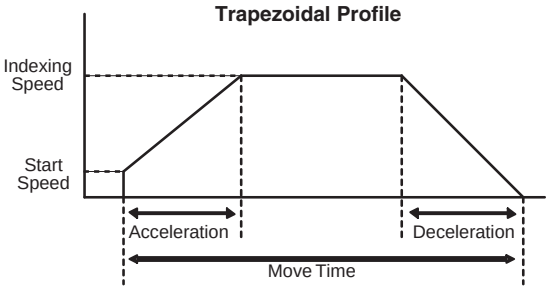

Equation ④: $f_{TRAP} = (P_{total} - (f_{start} \times t_{ramp})) \div (t_{total} - t_{ramp})$ **for trapezoidal motion profiles**

f_{start} = starting speed
t_{ramp} = acceleration or deceleration time

Example 6: What is the required indexing speed to make a "trapezoidal" move in 1.8s, accel/decel time of 200 ms each, 100,000 total pulses, and a starting speed of 40 Hz?

f_{TRAP} = (100,000 pulses - (40 pulses/sec x 0.2 sec)) ÷
(1.8 sec - 0.2 sec)
≈ 62,375 Hz.

Calculating the Required Torque

The required torque is the sum of acceleration (or deceleration) torque and the running torque. The equation for required motor torque is:

Equation ⑤: $T_{motor} = T_{accel\ (or\ decel)} + T_{run}$

T_{accel} = motor torque required to accelerate the total system inertia (including motor inertia).

T_{decel} = motor torque required to decelerate; not always the same as acceleration.

T_{run} = constant motor torque requirement to run the mechanism due to friction, external load forces, etc.

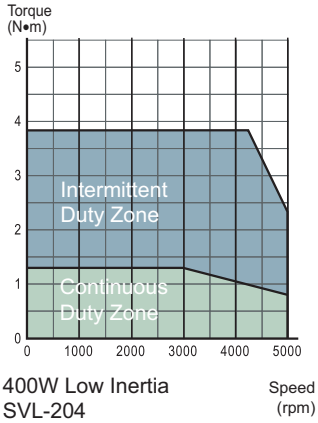

Continuous Duty Zone means the system can provide the torque under the curve 100% of the time.

Intermittent Duty Zone means the system can provide the torque under the curve LESS THAN 100% of the time.

The amount of time the system can operate in this region depends on the amount of torque. In general, the higher the torque, the shorter period of time is allowed. See overload curves information in Chapter 1. If a system requires more than rated torque occasionally, but only for a short time, the system can do it. Running in this zone continuously will result in an overload fault.

In **Table 1** we show how to calculate torque required to accelerate or decelerate an inertia from one speed to another and the calculation of running torque for common mechanical actuators.

Table 1 - Calculate the Torque for "Acceleration" and "Running"

The torque required to accelerate or decelerate a constant inertia with a linear change in velocity is:

Equation ⑥: $T_{accel} = J_{total} \times (\Delta speed \div \Delta time) \times (2\pi \div 60)$

J_{total} is the motor inertia plus load inertia ("reflected" to the motor shaft). The $(2\pi \div 60)$ is a factor used to convert "change in speed" expressed in rpm into angular speed (radians/second). Refer to information in this table to calculate "reflected" load inertia for several common shapes and mechanical mechanisms.

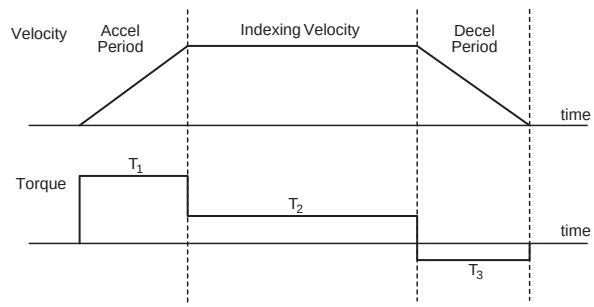

Example 7: What is the required torque to accelerate an inertia of 0.002 lb-in-sec² (motor inertia is 0.0004 lb-in-sec² and "reflected" load inertia is 0.0016 lb-in-sec²) from zero to 600 rpm in 50 ms?

T_{accel} = 0.002 lb-in-sec² x (600 rpm ÷ 0.05 seconds) x $(2\pi \div 60)$

≈ 2.5 lb-in

Leadscrew Equations

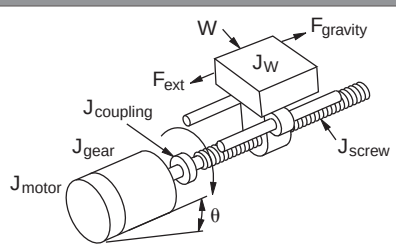

***i* = gear ratio**

Description:	Equations:
Motor rpm	$n_{motor} = (v_{load} \times P) \times i$, n_{motor} (rpm), v_{load} (in/min)
Torque required to accelerate and decelerate the load	T_{accel} $J_{total} \times (\Delta speed \div \Delta time) \times 0.1$
Motor total inertia	$J_{total} = J_{motor} + J_{gear} + ((J_{coupling} + J_{screw} + J_W) \div i^2)$
Inertia of the load	$J_W = (W \div (g \times e)) \times (1 \div 2\pi P)^2$
Pitch and Efficiency	P = pitch = revs/inch of travel, e = efficiency
Running torque	$T_{run} = ((F_{total} \div (2\pi P)) + T_{preload}) \div i$
Torque due to preload on the ballscrew	$T_{preload}$ = ballscrew nut preload to minimize backlash
Force total	$F_{total} = F_{ext} + F_{friction} + F_{gravity}$
Force of gravity and Force of friction	$F_{gravity} = W\sin\theta$, $F_{friction} = \mu W\cos\theta$
Incline angle and Coefficient of friction	θ = incline angle, μ = coefficient of friction

Table 1 (cont'd)

Typical Leadscrew Data			
Material:	**e = efficiency**	**Material:**	**μ = coef. of friction**
ball nut	0.90	**steel on steel**	0.580
acme with plastic nut	0.65	**steel on steel (lubricated)**	0.150
acme with metal nut	0.40	**teflon on steel**	0.040
		ball bushing	0.003

Belt Drive (or Rack & Pinion) Equations

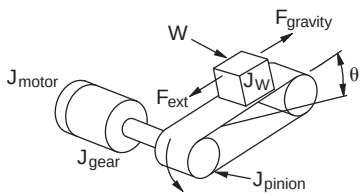

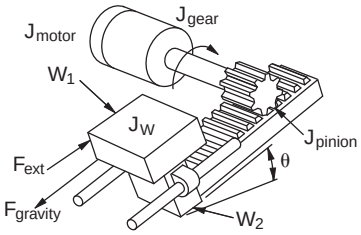

***i* = gear ratio**

Description:	Equations:
Motor rpm	$n_{motor} = (v_{load} \times 2\pi r) \times i$
Torque required to accelerate and decelerate the load	T_{accel} $J_{total} \times (\Delta speed \div \Delta time) \times 0.1$
Inertia of the load	$J_{total} = J_{motor} + J_{gear} + ((J_{pinion} + J_W) \div i^2)$
Inertia of the load	$J_W = (W \div (g \times e)) \times r^2$; $J_W = ((W_1 + W_2) \div (g \times e)) \times r^2$
Radius of pulleys	r = radius of pinion or pulleys (inch)
Running torque	$T_{run} = (F_{total} \times r) \div i$
Force total	$F_{total} = F_{ext} + F_{friction} + F_{gravity}$
Force of gravity and Force of friction	$F_{gravity} = W\sin\theta$; $F_{friction} = \mu W\cos\theta$

Belt (or Gear) Reducer Equations

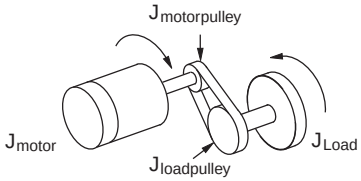

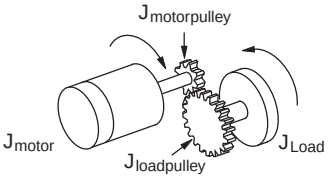

Description:	Equations:
Motor rpm	$n_{motor} = n_{load} \times i$
Torque required to accelerate and decelerate the load	T_{accel} $J_{total} \times (\Delta speed \div \Delta time) \times 0.1$
Inertia of the load	$J_{total} = J_{motor} + J_{motorpulley} + ((J_{loadpulley} + J_{Load}) \div i^2)$
Motor torque	$T_{motor} \times i = T_{Load}$

Table 1 (cont'd)

Inertia of Hollow Cylinder Equations

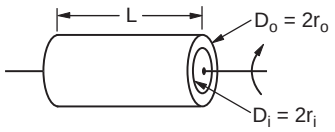

Description:	Equations:
Inertia (known weight)	$J = (W \times (r_o^2 + r_i^2)) \div (2g)$
Inertia (known density)	$J = (\pi \times L \times \rho \times (r_o^4 - r_i^4)) \div (2g)$
Volume	volume = $\pi/4 \times (D_o^2 - D_i^2) \times L$

Inertia of Solid Cylinder Equations

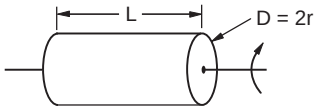

Description:	Equations:
Inertia (known weight)	$J = (W \times r^2) \div (2g)$
Inertia (known density)	$J = (\pi \times L \times \rho \times r^4) \div (2g)$
Volume	volume = $\pi \times r^2 \times L$

Inertia of Rectangular Block Equations

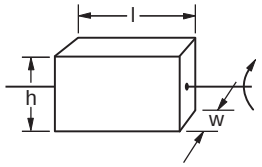

Description:	Equations:
Inertia (known weight)	$J = (W \div 12g) \times (h^2 + w^2)$
Volume	volume = l x h x w

Symbol Definitions

J = inertia lb-in-s^2 (Kg-m-s^2)	ρ = density
L = Length, inches (m)	ρ = 0.098 lb/in^3 (aluminum)
h = height, inches (m)	ρ = 0.28 lb/in^3 (steel)
w = width, inches (m)	ρ = 0.04 lb/in^3 (plastic)
W = weight, lbs. (Kg)	ρ = 0.31 lb/in^3 (brass)
D = diameter, inches (m)	ρ = 0.322 lb/in^3 (copper)
r = radius, inches (m)	
g = gravity = 386 in/sec^2 (9.8 m/s^2)	$\pi \approx 3.14$

Leadscrew - Example Calculations

Step 1 - Define the Actuator and Motion Requirements

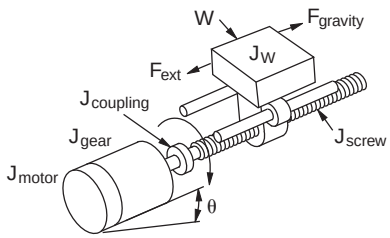

Weight of table and workpiece = 150 lb
Angle of inclination = 0°
Friction coefficient of sliding surfaces = 0.05
External load force = 0
Ball screw shaft diameter = 0.8 inch
Ball screw length = 96 inch
Ball screw material = steel
Ball screw lead = 8.0 inch/rev (P ≈ 0.125 rev/in)
Desired Resolution = 0.0005 inches/count
Gear reducer = 2:1
Stroke = 78 inches
Move time = 12 seconds

Definitions
d_{load} = lead or distance the load moves per revolution of the actuator's drive shaft (P = pitch = $1/d_{load}$)
D_{total} = total move distance
θ_{count} = servo resolution (counts/rev_{motor})
i = gear reduction ratio ($rev_{motor}/rev_{gearshaft}$)
T_{accel} = motor torque required to accelerate and decelerate the total system inertia (including motor inertia)
T_{run} = constant motor torque requirement to run the mechanism due to friction, external load forces, etc.
t_{total} = move time

Step 2 - Determine the Positioning Resolution of the Load

The resolution of the load can be determined using **Equation** ②. If the servo motor is connected directly to the ballscrew, then the best resolution possible would be:

$$L_\theta = (d_{load} \div i) \div \theta_{count}$$
$$= (8 \div 1) \div 10{,}000$$
$$= 0.0008$$

This does not meet the system requirements; however, if we add a 2:1 transmission with no lost motion (backlash, etc.) to the output of the motor, the resolution gets better by a factor of 2, so the minimum requirements would be met.

$$L_\theta = (8 \div 2) \div 10{,}000$$
$$= 0.0004$$

Step 3 - Determine the Motion Profile

From **Equation** ①, the total pulses to make the required move is:

$P_{total} = (D_{total} \div (d_{load} \div i)) \times \theta_{count}$

$= (78 \div (8 \div 2)) \times 10{,}000 = 195{,}000$ pulses

From **Equation** ④, the indexing frequency for a trapezoidal move is:

$f_{TRAP} = (P_{total} - (f_{start} \times t_{ramp})) \div (t_{total} - t_{ramp})$

$= (195{,}000 - (100 \times 0.6)) \div (12 - 0.6) \approx 17.1$ KHz

where accel time is 5% of total move time and starting speed is 100 Hz.

$=17.1$ KHz $\times$ (60 sec/1 min) $\div$ 10,000 counts/rev

≈ 103 rpm

Step 4 - Determine the Required Motor Torque

Using the equations in **Table 1**:

$J_{total} = J_{motor} + J_{gear} + ((J_{coupling} + J_{screw} + J_W) \div i^2)$

For this example, let's assume the gearbox and coupling inertia are zero.

$J_W = (W \div (g \times e)) \times (1 \div 2\pi P)^2$

$= (150 \div (386 \times 0.9)) \times (1 \div 2 \times 3.14 \times 0.125)^2$

≈ 0.700 lb-in-sec²

$J_{screw} \approx (\pi \times L \times \rho \times r^4) \div (2g)$

$\approx (3.14 \times 96 \times 0.28 \times 0.0256) \div (2 \times 386)$

≈ 0.0028 lb-in-sec²

The inertia of the load and screw reflected to the motor is:

$J_{(screw + load)\ to\ motor} = ((J_{screw} + J_W) \div i^2)$

$\approx ((0.0028 + 0.700) \div 2^2) = 0.176$ lb-in-sec²

The torque required to accelerate the inertia is:

$T_{accel} \approx J_{total} \times (\Delta speed \div \Delta time) \times 0.1$

$= 0.176 \times (103 \div 0.6) \times 0.1 \approx 1.08$ lb-in

Next, we need to determine running torque. If the machine already exists then it is sometimes possible to actually measure running torque by turning the actuator driveshaft with a torque wrench.

$T_{run} = ((F_{total} \div (2\ \pi\ P)) + T_{preload}) \div i$

$F_{total} = F_{ext} + F_{friction} + F_{gravity}$

$= 0 + \mu W \cos\theta + 0 = 0.05 \times 150 = 7.5$ lb

$T_{run} = (7.5 \div (2 \times 3.14 \times 0.125)) \div 2$

≈ 4.77 lb-in

where we have assumed preload torque to be zero.

From **Equation** ⑤, the required motor torque is:

$T_{motor} = T_{accel} + T_{run} = 1.08 + 4.77 \approx 5.85$ lb-in ≈ 0.66 N·m

However, this is the required motor torque before we have picked a motor and included the motor inertia.

Step 5 - Select and Confirm the Servo Motor and Driver System

It looks like a reasonable choice for a motor would be the SVL-207. This motor has an inertia of:

J_{motor} = 0.00096 lb-in-sec²

The actual motor torque would be modified:

$T_{accel} = J_{total} \times (\Delta speed \div \Delta time) \times 0.1$

$= (0.176 + \mathbf{0.00096}) \times (103 \div 0.6) \times 0.1$

≈ 1.09 lb-in

so that:

$T_{motor} = T_{accel} + T_{run}$

$= 1.09 + 4.77 \approx 5.86$ lb-in ≈ 0.66 N•m

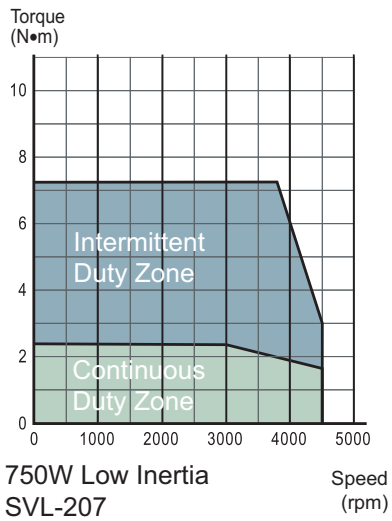

750W Low Inertia
SVL-207

It looks like the 750W system will work. However, we still need to check the load to motor inertia ratio:

Ratio = $J_{(screw + load)\ to\ motor} \div J_{motor}$

= 0.176 ÷ 0.00096 = 183.3

It is best to keep the load to motor inertia ratio below 10, so 183 is well outside this guideline. Although the servo has enough power to control the system, the large mismatch ratio may prevent proper tuning and faster acceleration settings in the future. Since the motor speed required to move the system is well within the motor specs, we can change the gear ratio to use a 750W motor or select a much larger motor such as the SVM-220. Because the reflected inertia is decreased by the square of the ratio, we will change the gear ratio to 10:1. By doing this, the mismatch ratio is now 7.3 (before we consider any added inertia due to the reducer).

Reflected J = $\frac{J_{screw}+J_{load}}{2^2}$ **= .176, so**

New Reflected J = $\frac{J_{screw}+J_{load}}{10^2}$ **= .00704**

New J Ratios = $\frac{.00704}{.00096}$ **= 7.33**

Belt Drive - Example Calculations

Step 1 - Define the Actuator and Motion Requirements

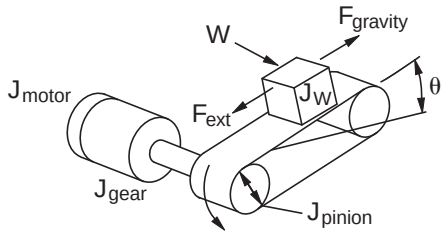

Weight of table and workpiece = 90 lb
External force = 0 lb
Friction coefficient of sliding surfaces = 0.05
Angle of table = 0º
Belt and pulley efficiency = 0.8
Pulley diameter = 2.0 inch
Pulley thickness = 0.75 inch
Pulley material = aluminum
Desired Resolution = 0.0005 inch/step
Gear Reducer = 10:1
Stroke = 50 inch
Move time = 4.0 seconds
Accel and decel time = 1.0 seconds

Definitions
d_{load} = lead or distance the load moves per revolution of the actuator's drive shaft (P = pitch = $1/d_{load}$)
D_{total} = total move distance
θ_{count} = servo resolution (counts/rev_{motor})
i = gear reduction ratio ($rev_{motor}/rev_{gearshaft}$)
T_{accel} = motor torque required to accelerate and decelerate the total system inertia (including motor inertia)
T_{run} = constant motor torque requirement to run the mechanism due to friction, external load forces, etc.
t_{total} = move time

Step 2 - Determine the Positioning Resolution of the Load

The resolution of the load can be determined using **Equation ②** . If the servo motor is connected directly to the pulley, then the best resolution possible would be:

$$L\theta = (d_{load} \div i) \div \theta_{count}$$
$$= ((\pi \times 2.0) \div 1) \div 10{,}000$$
$$= =0.00063$$

where $d_{load} = \pi$ x Pulley Diameter.

This does not meet the system requirements. However, if we add a 10:1 transmission to the output of the motor, the resolution improves by a factor of 10, meeting the minimum system requirements.

$$\mathbf{Lu = ((p \times 2.0) \div 10) \div 10{,}000}$$
$$\mathbf{= 0.000063}$$

Step 3 - Determine the Motion Profile

From **Equation** ①, the total pulses to make the required move is:

$P_{total} = (D_{total} \div (d_{load} \div i)) \times \theta_{count}$
$= 50 \div ((3.14 \times 2.0) \div 10 \times 10{,}000$
$\approx 795{,}775$ pulses

From **Equation** ④, the running frequency for a trapezoidal move is:

$f_{TRAP} = (P_{total} - (f_{start} \times t_{ramp})) \div (t_{total} - t_{ramp})$
$= 795{,}775 \div (4 - 1)$
$\approx 265{,}258$ Hz or 265.3 KHz
where accel time is 25% of total move time and starting speed is zero.
$=$ 265.3 KHz x (60 sec/1 min) ÷ 10,000 counts/rev
$\approx$ 1,592 rpm motor speed

Step 4 - Determine the Required Motor Torque

Using the equations in **Table 1**:

$J_{total} = J_{motor} + J_{gear} + ((J_{pulleys} + J_W) \div i^2)$

For this example, let's assume the gearbox inertia is zero.

$J_W = (W \div (g \times e)) \times r^2$
$= (90 \div (386 \times 0.8)) \times 1$
≈ 0.291 lb-in-sec²

Pulley inertia (remember, there are two pulleys) can be calculated as:

$J_{pulleys} \approx ((\pi \times L \times \rho \times r^4) \div (2g)) \times 2$
$\approx ((3.14 \times 0.75 \times 0.098 \times 1) \div (2 \times 386)) \times 2$
≈ 0.0006 lb-in-sec²

The inertia of the load and pulleys reflected to the motor is:

$J_{(pulleys + load)\ to\ motor} = ((J_{pulleys} + J_W) \div i^2)$
$\approx ((0.291 + 0.0006) \div 100) \approx 0.0029$ lb-in-sec²

The torque required to accelerate the inertia is:

$T_{acc} \approx J_{total} \times (\Delta speed \div \Delta time) \times 0.1$
$= 0.0029 \times (1592 \div 1) \times 0.1$
$= 0.46$ lb-in

$T_{run} = (F_{total} \times r) \div i$

$F_{total} = F_{ext} + F_{friction} + F_{gravity}$
$= 0 + \mu W \cos\theta + 0 = 0.05 \times 100 = 5.0$ lb

$T_{run} = (5.0 \times 1) \div 10$
≈ 0.50 lb-in

From **Equation** ⑤, the required motor torque is:

$T_{motor} = T_{accel} + T_{run} = 0.46 + 0.50 \approx 0.96$ lb-in ≈ 0.11 N•m

However, this is the required motor torque before we have picked a motor and included the motor inertia.

Step 5 - Select and Confirm the Servo Motor and Driver System

It looks like a reasonable choice for a motor would be the SVL-2040. This motor has an inertia of:

J_{motor} = 0.0003 lb-in-sec²

The actual motor torque would be modified:

$T_{accel} = J_{total} \times (\Delta speed \div \Delta time) \times 0.1$

$= (0.0029 + \mathbf{0.0003}) \times (1592 \div 1) \times 0.1 \approx 0.51$ lb-in

so that:

$T_{motor} = T_{accel} + T_{run}$

$= 0.51 + 0.5 \approx 1.01$ lb-in ≈ 0.12 N•m

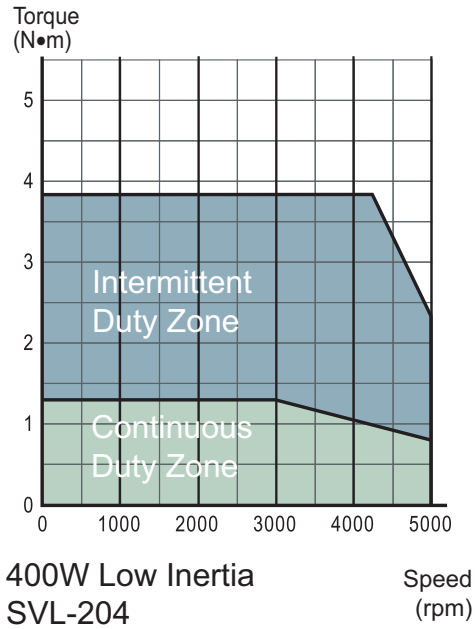

It looks like the 400W system will work. However, we still need to check the load to motor inertia ratio:

Ratio = $J_{(pulleys + load)\ to\ motor} \div J_{motor}$

$= 0.0029 \div 0.0003 = 9.6$

It is best to keep the load to motor inertia ratio at or below 10, so 9.6 is within an acceptable range.

Index Table - Example Calculations

Step 1 - Define the Actuator and Motion Requirements

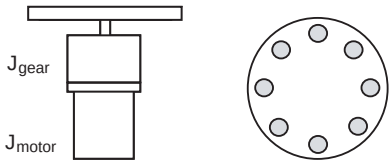

Diameter of index table = 12 inch
Thickness of index table = 3.25 inch
Table material = steel
Number of workpieces = 8
Desired Resolution = 0.006º
Gear Reducer = 6:1
Index angle = 45º
Index time = 0.5 seconds

Definitions
d_{load} = lead or distance the load moves per revolution of the actuator's drive shaft (P = pitch = $1/d_{load}$)
D_{total} = total move distance
θ_{count} = servo resolution (counts/rev_{motor})
i = gear reduction ratio ($rev_{motor}/rev_{gearshaft}$)
T_{accel} = motor torque required to accelerate and decelerate the total system inertia (including motor inertia)
T_{run} = constant motor torque requirement to run the mechanism due to friction, external load forces, etc.
t_{total} = move time

Step 2 - Determine the Positioning Resolution of the Load

The resolution of the load can be determined using **Equation** ④ If the servo motor is connected directly to the table, then the best resolution possible would be:

$$L_\theta = (d_{load} \div i) \div \theta_{count}$$
$$= (360^o \div 1) \div 10{,}000$$
$$= 0.036°$$

This does not meet the system requirements. However, if we add a 6:1 transmission to the output of the motor, the resolution gets better by a factor of 6, meeting the minimum system requirements.

$$= (360^o \div 6) \div 10{,}000$$
$$= 0.006°$$

Step 3 - Determine the Motion Profile

From **Equation** ①, the total pulses to make the required move is:

$P_{total} = (D_{total} \div (d_{load} \div i)) \times \theta_{count}$
$= (45^o \div (360^o \div 6) \times 10{,}000$
$= 7{,}500$ pulses

From **Equation** ④, the running frequency for a trapezoidal move is:

$f_{TRAP} = (P_{total} - (f_{start} \times t_{ramp})) \div (t_{total} - t_{ramp})$
$= 7{,}500 \div (0.5 - 0.13) \approx 20.27$ kHz
where accel time is 25% of total move time and starting speed is zero.
$= 20.27$ kHz x (60 sec/1 min) ÷ 10,000 counts/rev
≈ 121 rpm

Step 4 - Determine the Required Motor Torque

Using the equations in **Table 1**:

$J_{total} = J_{motor} + J_{gear} + (J_{table} \div i^2)$

For this example, let's assume the gearbox inertia is zero.

$J_{table} \approx (\pi \times L \times \rho \times r^4) \div (2g)$
$\approx (3.14 \times 3.25 \times 0.28 \times 1296) \div (2 \times 386)$
≈ 4.80 lb-in-sec²

The inertia of the indexing table reflected to the motor is:

$J_{table\ to\ motor} = J_{table} \div i^2$
≈ 0.133 lb-in-sec²

The torque required to accelerate the inertia is:

$T_{accel} \approx J_{total} \times (\Delta speed \div \Delta time) \times 0.1$
$= 0.133 \times (121 \div 0.13) \times 0.1$
≈ 12.38 lb-in

From **Equation** ⑤, the required motor torque is:

$T_{motor} = T_{accel} + T_{run}$
$= 12.38 + 0 = 12.38$ lb-in ≈ 1.40 N•m

However, this is the required motor torque before we have picked a motor and included the motor inertia.

Step 5 - Select and Confirm the Servo Motor and Driver System

It looks like a reasonable choice for a motor would be the SVM-220. This motor has an inertia of:

J_{motor} = 0.014 lb-in-sec²

The actual motor torque would be modified:

$T_{accel} = J_{total} \times (\Delta speed \div \Delta time) \times 0.1$

$= (0.133 + \mathbf{0.014}) \times (121 \div 0.13) \times 0.1$

≈ 13.68 lb-in

so that:

$T_{motor} = T_{accel} + T_{run}$

$= 13.68 + 0$

$= 13.68$ lb-in ≈ 1.55 N•m

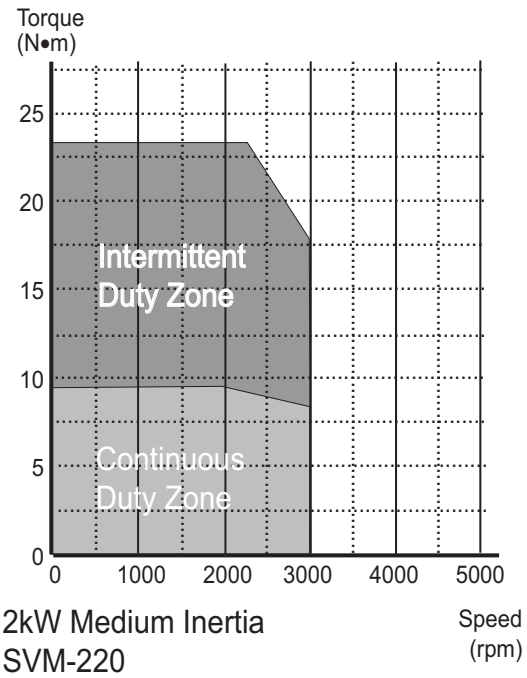

2kW Medium Inertia
SVM-220

It looks like the 2 kW medium inertia system will work. However, we still need to check the load to motor inertia ratio:

$\mathbf{Ratio} = J_{table\ to\ motor} \div J_{motor}$

$= 0.133 \div 0.014 = 9.5$

It is best to keep the load to motor inertia ratio at or below 10, so 9.5 is within an acceptable range.

Engineering Unit Conversion Tables, Formulas, & Definitions

Conversion of Length							
To convert A to B, multiply A by the entry in the table.		B					
		µm	mm	m	mil	in	ft
A	µm	1	1.000E–03	1.000E–06	3.937E–02	3.937E–05	3.281E–06
	mm	1.000E+03	1	1.000E–03	3.937E+01	3.937E–02	3.281E–03
	m	1.000E+06	1.000E+03	1	3.937E+04	3.937E+01	3.281E+00
	mil	2.540E+01	2.540E–02	2.540E–05	1	1.000E–03	8.330E–05
	in	2.540E+04	2.540E+01	2.540E–02	1.000E+03	1	8.330E–02
	ft	3.048E+05	3.048E+02	3.048E–01	1.200E+04	1.200E+01	1

Conversion of Torque							
To convert A to B, multiply A by the entry in the table.		B					
		Nm	kpm(kg-m)	kg-cm	oz-in	lb-in	lb-ft
A	Nm	1	1.020E–01	1.020E+01	1.416E+02	8.850E+00	7.380E-01
	kpm(kg-m)	9.810E+00	1	1.000E+02	1.390E+03	8.680E+01	7.230E+00
	kg-cm	9.810E–02	1.000E–02	1	1.390E+01	8.680E–01	7.230E–02
	oz-in	7.060E–03	7.200E–04	7.200E–02	1	6.250E–02	5.200E–03
	lb-in	1.130E–01	1.150E–02	1.150E+00	1.600E+01	1	8.330E–02
	lb-ft	1.356E+00	1.380E–01	1.383E+01	1.920E+02	1.200E+01	1

Conversion of Moment of Inertia								
To convert A to B, multiply A by the entry in the table.		B						
		kg-m^2	kg-cm-s^2	oz-in-s^2	lb-in-s^2	oz-in^2	lb-in^2	lb-ft^2
A	kg-m^2	1	1.020E+01	1.416E+02	8.850E+00	5.470E+04	3.420E+03	2.373E+01
	kg-cm-s^2	9.800E–02	1	1.388E+01	8.680E–01	5.360E+03	3.350+02	2.320E+00
	oz-in-s^2	7.060E–03	7.190E–02	1	6.250E–02	3.861E+02	2.413E+01	1.676E–01
	lb-in-s^2	1.130E–01	1.152E+00	1.600E+01	1	6.180E+03	3.861E+02	2.681E+00
	oz-in^2	1.830E–05	1.870E–04	2.590E–03	1.620E–04	1	6.250E–02	4.340E–04
	lb-in^2	2.930E–04	2.985E–03	4.140E–02	2.590E–03	1.600E+01	1	6.940E–03
	lb-ft^2	4.210E–02	4.290E–01	5.968E+00	3.730E–01	2.304E+03	1.440E+02	1

Engineering Unit Conversion Tables, Formulas, & Definitions (continued)

General Formulae & Definitions	
Description:	**Equations:**
Gravity	gravity = 9.8 m/s^2 = 386 in/s^2
Torque	$T = J\alpha$, α = rad/s^2
Power (Watts)	P(W) = T(N·m) · ω(rad/s)
Power (Horsepower)	P(hp) = T(lb·in) · ν(rpm) / 63,024
Horsepower	1 hp = 746 W
Revolutions	1 rev = 1,296,000 arc·sec = 21,600 arc·min = 360 degrees

Equations for Straight-Line Velocity & Constant Acceleration	
Description:	**Equations:**
Final velocity	$v_f = v_i + at$ final velocity = initial velocity + (acceleration · time)
Final position	$x_f = x_i + ½(v_i + v_f)t$ final position = initial position + [1/2 · (initial velocity + final velocity) · time]
Final position	$x_f = x_i + v_it + ½at^2$ final position = initial position + (initial velocity · time) + (1/2 · acceleration · time squared)
Final velocity squared	$v_f^2 = v_i^2 + 2a(x_f - x_i)$ final velocity squared = initial velocity squared + [2 · acceleration · (final position – initial position)]

USING *SURE*SERVO™ WITH *DIRECT*LOGIC PLCS

APPENDIX C

In This Appendix ...

Compatible *Direct*LOGIC PLCs and Modules C-2

Typical Connections to a DL05 PLC C-4

Typical Connections to an H0-CTRIO C-5

Typical Connections – Multiple Drives/Motors Through Communication C-7

Connecting *Sure*Servo™ to ADC Line Driver Encoders C-8

Connecting *Sure*Servo™ to ADC Open-Collector Encoders C-9

Compatible *Direct*LOGIC PLCs and Modules

The following tables show which *Direct*LOGIC PLCs and modules can be used with *Sure*Servo™ servo systems.

*Direct*LOGIC PLC s/Modules for Use with *Sure*Servo Systems	
DL05 PLCs	
D0-05AD	DL05 CPU, 8 AC in / 6 DC out, 110/220VAC power supply. Inputs: 8 AC inputs, 90-120 VAC, 2 isolated commons. Outputs: 6 DC outputs, 6-27 VDC current sinking, 1.0A/pt. max., 1 common. 2 outputs are configurable for independent CW/CCW pulse train output or step and direction pulse output up to 7KHz (0.5A/pt.).
D0-05DD	DL05 CPU, 8 DC in / 6 DC out, 110/220VAC power supply. Inputs: 8 DC inputs, 12-24 VDC current sinking/sourcing, 2 isolated commons. Outputs: 6 DC outputs, 6-27 VDC current sinking, 1.0A/pt. max., 1 common. 2 outputs are configurable for independent CW/CCW pulse train output or step and direction pulse output up to 7KHz (0.5A/pt.) (not available when using high-speed inputs).
D0-05DD-D	DL05 CPU, 8 DC in / 6 DC out, 12/24VDC power supply. Inputs: 8 DC inputs, 12-24 VDC current sinking/sourcing, 2 isolated commons. Outputs: 6 DC outputs, 6-27 VDC current sinking, 1.0A/pt. max., 1 common. 2 outputs are configurable for independent CW/CCW pulse train output or step and direction pulse output up to 7KHz (0.5A/pt.) (not available when using high-speed inputs).
DL06 PLCs	
D0-06DD1	DL06 CPU, 20 DC in / 16 DC out, 110/220VAC power supply, with 0.3A 24VDC auxiliary device power supply. Inputs: 20 DC inputs, 12-24 VDC current sinking/sourcing, 5 isolated commons (4 inputs per common). Outputs: 16 DC outputs, 12-24 VDC current sinking, 1.0A/pt. max., 4 commons non-isolated (4 points per common). 2 outputs are configurable for independent CW/CCW pulse train output or step and direction pulse output up to 10KHz (0.5A/pt.) (not available when using high-speed inputs).
D0-06DD1-D	DL06 CPU, 20 DC in / 16 DC out, 12/24VDC power supply. Inputs: 20 DC inputs, 12-24 VDC current sinking/sourcing, 5 isolated commons (4 inputs per common). Outputs: 16 DC outputs, 12-24 VDC current sinking, 1.0A/pt. max., 4 commons non-isolated (4 points per common). 2 outputs are configurable for independent CW/CCW pulse train output or step and direction pulse output up to 10KHz (0.5A/pt.) (not available when using high-speed inputs).
DL05/DL06 High Speed Counter I/O Module	
H0-CTRIO	DL05/06 High Speed Counter I/O Interface Module, 4 DC sink/source inputs 9-30 VDC, 2 isolated sink/source DC outputs, 5-30 VDC, 1A per point. Inputs supported: 1 quadrature encoder counters up to 100KHz, or 2 single channel counters up to 100KHz, and 2 high speed discrete inputs for Reset, Inhibit, or Capture. Outputs supported: 2 independently configurable high speed discrete outputs or 1 channel pulse output control, 20Hz-25KHz per channel, pulse and direction or cw/ccw pulses.

*Direct*LOGIC PLCs/Modules for Use with *Sure*Servo Systems (cont.)	
DL105 PLCs	
F1-130AD	DL130 CPU, 10 AC in / 8 DC out, 110/220VAC Power Supply. Inputs: 10 AC inputs, 80-132 VAC, 3 isolated commons. Outputs: 8 DC outputs, 5-30VDC current sinking, 0.5A/pt. max, 3 internally connected commons. 3 internally connected commons. 2 outputs are configurable for independent CW/CCW pulse train output or step and direction pulse output up to 7KHz (@ 0.25A/pt. max).
F1-130DD	DL130 CPU, 10 DC in / 8 DC out, 110/220 VAC Power Supply. Inputs: 10 DC inputs, 12-24 VDC current sinking/sourcing, 3 isolated commons. Outputs: 8 DC outputs, 5-30VDC current sinking, 0.5A/pt. max, 3 internally connected commons. 2 outputs are configurable for independent CW/CCW pulse train output or step and direction pulse output up to 7KHz (@ 0.25A/pt. max) (not available when using high-speed inputs).
F1-130DD-D	DL130 CPU, 10 DC in / 8 DC out, 12/24VDC Power Supply. Inputs: 10 DC inputs, 12-24 VDC current sinking/sourcing, 3 isolated commons. Outputs: 8 DC outputs, 5-30VDC current sinking, 0.5A/pt. max, 3 internally connected commons. 2 outputs are configurable for independent CW/CCW pulse train output or step and direction pulse output up to 7KHz (@ 0.25A/pt. max) (not available when using high-speed inputs).
DL205 High Speed Counter I/O Modules	
H2-CTRIO *	DL205 High Speed Counter I/O Interface Module, 8 DC sink/source inputs 9-30VDC, 4 isolated sink/source DC outputs, 5-30VDC, 1A per point. Inputs supported: 2 quadrature encoder counters up to 100KHz, or 4 single channel counters up to 100KHz, and 4 high speed discrete inputs for Reset, Inhibit, or Capture. Outputs supported: 4 independently configurable high speed discrete outputs or 2 channels pulse output control, 20Hz-25KHz per channel, pulse and direction or cw/ccw pulses.
D2-CTRINT	Counter Interface Module, 4 isolated DC inputs, 1 pulse train output (cw) or 2 pulse train outputs (cw,ccw) with DC input restrictions, accepts two up-counters when used with D2-240 or D2-250(-1) (one only with D2-230), or one up/down counter. (not available when using high-speed inputs).
Terminator I/O High Speed Counter I/O Module	
T1H-CTRIO *	Terminator I/O High Speed Counter I/O Interface Module, 8 DC sink/source inputs 9-30VDC, 4 isolated sink/source DC outputs, 5-30VDC, 1A per point. Inputs supported: 2 quadrature encoder counters up to 100KHz, or 4 single channel counters up to 100KHz, and 4 high speed discrete inputs for Reset, Inhibit, or Capture. Outputs supported: 4 independently configurable high speed discrete outputs or 2 channels pulse output control, 20Hz-25KHz per channel, pulse and direction or cw/ccw pulses. (Use with T1K-16B or T1K-16B-1 terminal base.)
DL405 High Speed Counter I/O Module	
H4-CTRIO	DL405 High Speed Counter I/O Interface Module, 8 DC sink/source inputs 9-30VDC, 4 isolated sink/source DC outputs, 5-30VDC, 1A per point. Inputs supported: 2 quadrature encoder counters up to 100KHz, or 4 single channel counters up to 100KHz, and 4 high speed discrete inputs for Reset, Inhibit, or Capture. Outputs supported: 4 independently configurable high speed discrete outputs or 2 channels pulse output control, 20Hz-25KHz per channel, pulse and direction or cw/ccw pulses.
**** Note: The H2-CTRIO and T1H-CTRIO High Speed Counter I/O Interface Modules can also be used to control the SureServo Servo System in PC-Based Control systems with Think & Do/Studio or with our embedded WinPLC/EBC module plugged into the CPU slot of the DL205 base.***	

Typical Connections to a DL05 PLC

The following wiring diagram shows typical connections between the *Sure*Servo™ Servo System components and a *Direct*LOGIC DL05 PLC. Refer to the DL05 Micro PLC User Manual, p/n D0-USER-M, Chapter 3: High-Speed Input and Pulse Output Features, for detailed programming instructions when using the PLC for the Mode 30: Pulse Output function.

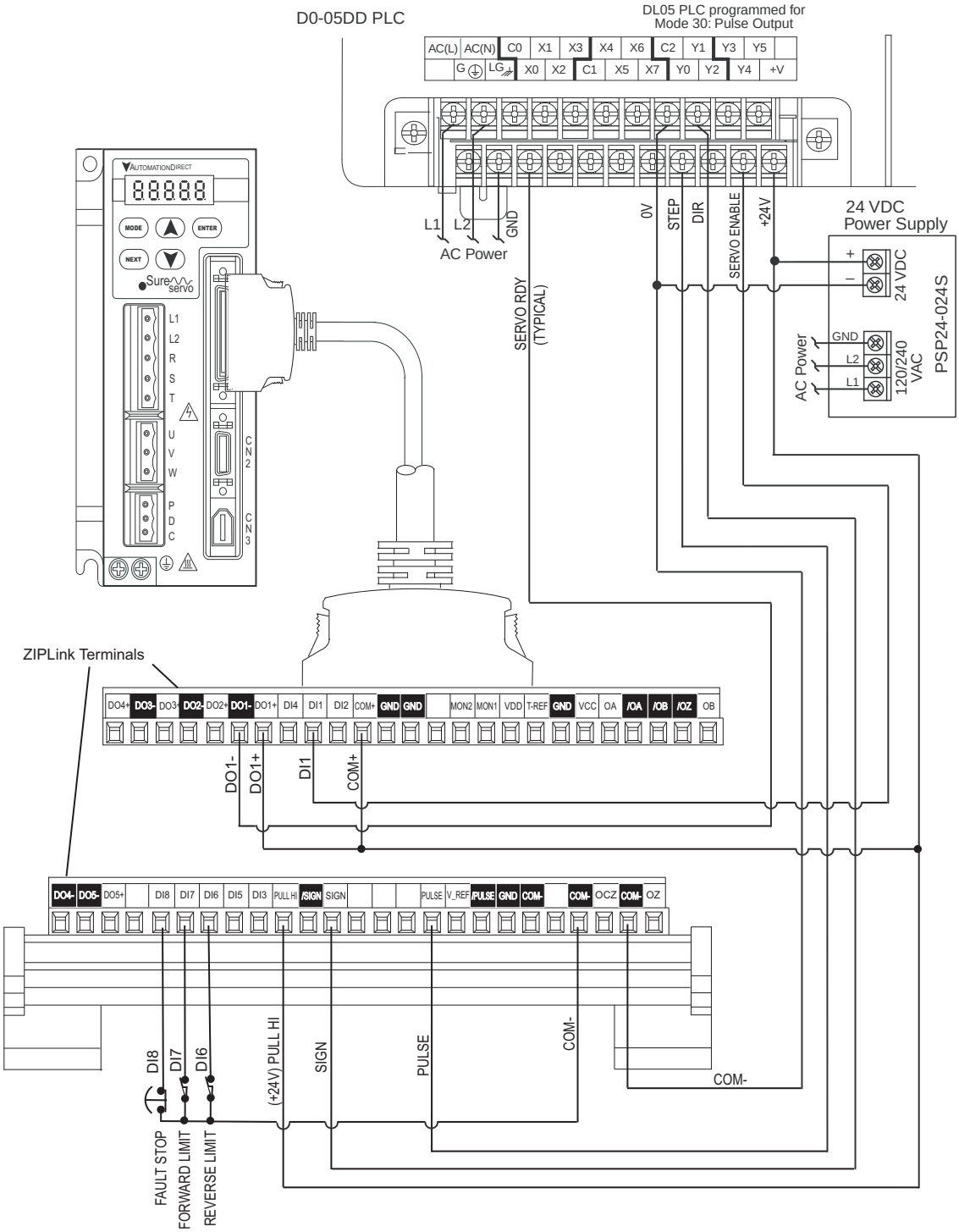

Typical Connections to an H0-CTRIO

The following wiring diagram shows typical connections between the *Sure*Servo™ Servo System components and a *Direct*LOGIC H0-CTRIO High Speed Counter I/O Interface Module installed in either a DL05 or DL06 PLC option slot. Refer to the CTRIO High-Speed Counter Module User Manual, p/n HX-CTRIO-M, for detailed programming instructions when using the H0-CTRIO module.

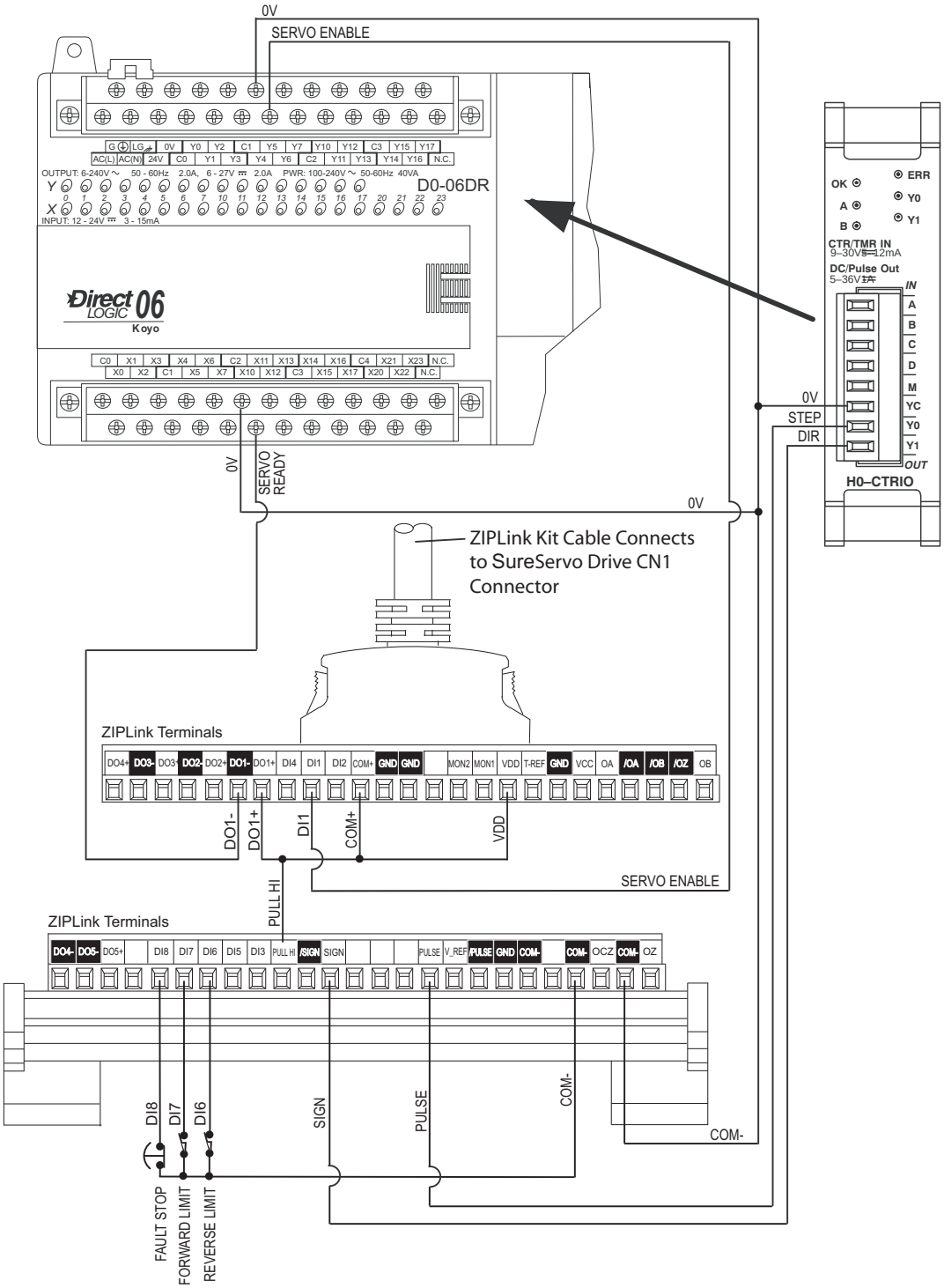

The following wiring diagram shows typical connections between the *Sure*Servo™ servo components and a DirectLogic DL06 PLC. Although this example is a PLC, any Modbus master controller would work in this control scheme.

Refer to the DL06 programming manual for detailed programming instructions and examples using Port 2 of the DL06 for Modbus communications. Modbus register addresses can be found in Chapter 6 of this manual.

Below find a few quick-start tips when using this control method:

- The communication parameters P3-01 (Baud rate) and P3-02 (protocol) should match in all the devices and the multidrop network. Each device on this network MUST have a unique Modbus identifier: Set P3-00 to a unique address. P3-05 (RS communication type) must also be set the same in each servo system.
- To use RS485 communications, simply jumper the TX- and RX- signals together as well as the TX+ and RX+ signals and set parameter P3-05 = 1.
- If your application needs to change speeds, positions, ramps, etc. frequently, P2-30 should be set to 5 to prevent excessive writes to flash memory. As with any EE-type memory, there is a finite number of times the hardware can be written to before it will become damaged and fail. By setting the parameter to 5, the drive uses the new values that are written but they are not set to flash memory, thereby not prematurely damaging the drive.

NOTE: The value in P2-30 is NOT stored in flash memory and MUST be set each time the drive is powered up (default is zero).

Typical Connections – Multiple Drives/Motors Through Communication

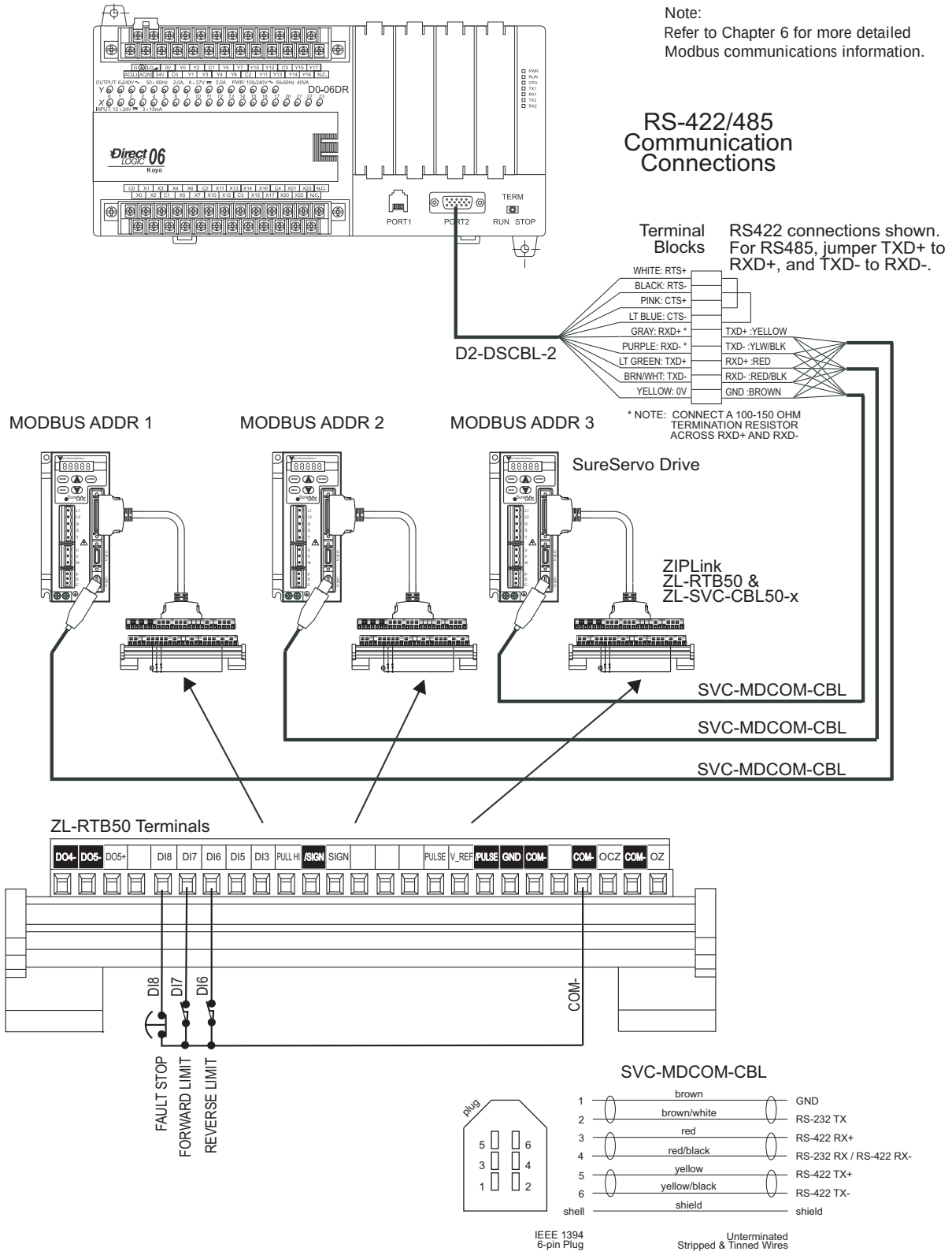

Connecting *Sure*Servo™ to ADC Line Driver Encoders

ADC Model TRD-Sxxx-VD
Line Driver Encoder Connections

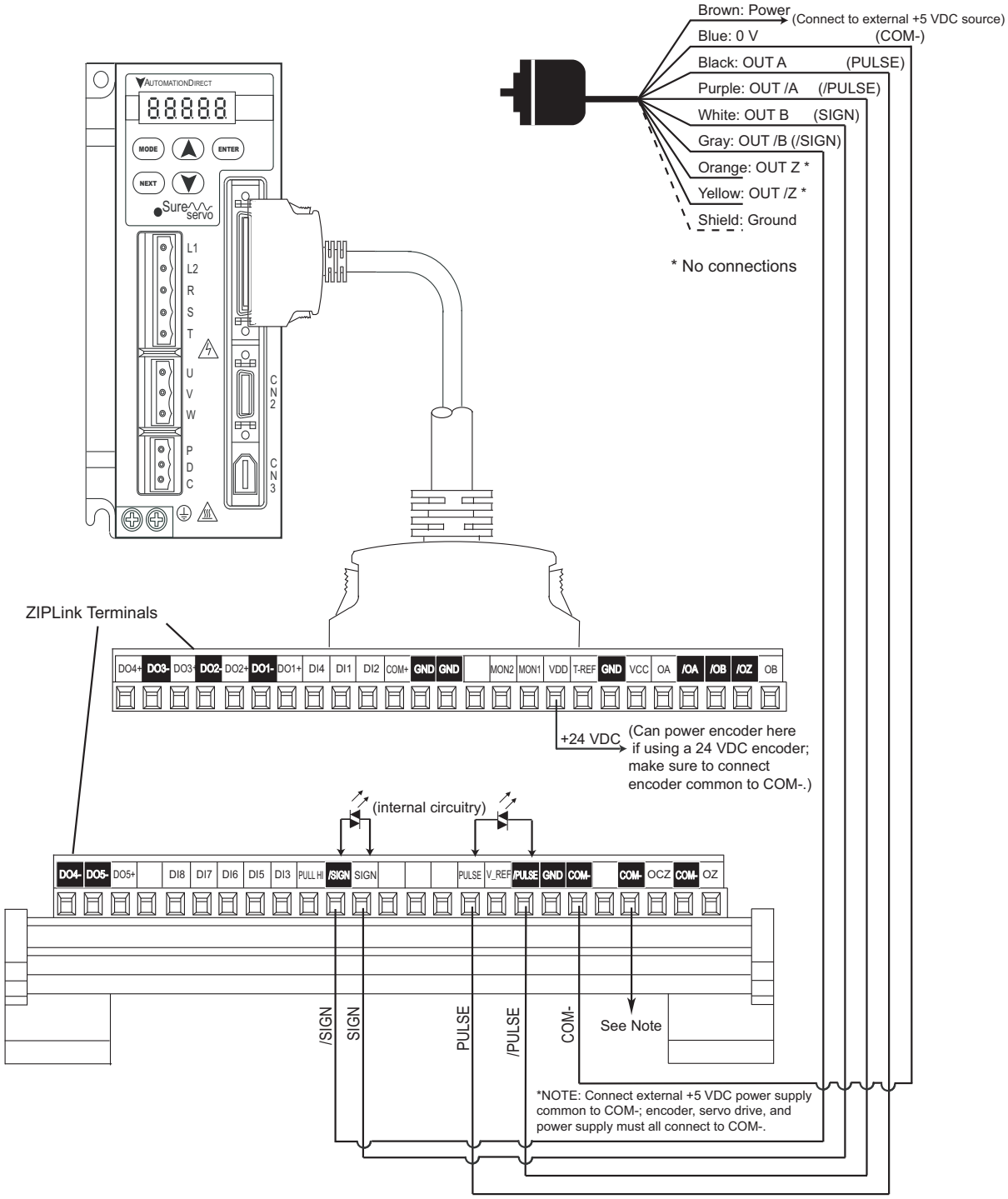

Connecting *Sure*Servo™ to ADC Open-Collector Encoders

ADC Model TRD-Sxxx-BD
Open-Collector Encoder Connections

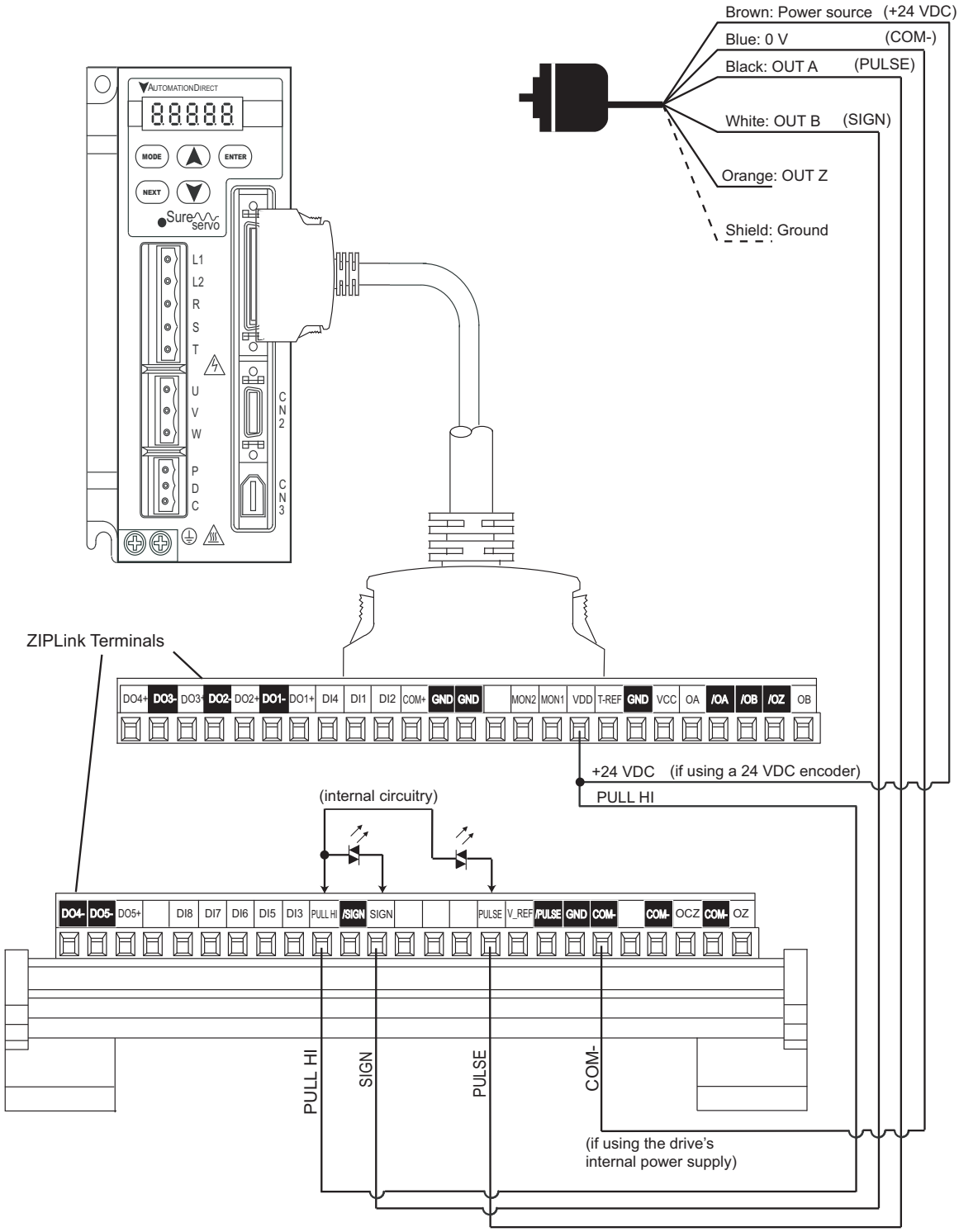

BLANK
PAGE

Latest *Sure*Servo™ Firmware Revisions

Appendix D

In This Appendix...

*Sure*Servo Firmware Identification D–2

Overview of Changes in New Firmware Versions . .D–2

Firmware Version 2.105 . . . . . .D–2

Firmware Version 2.10 . . . . . .D–2

Drive Operation Changes in Firmware Version 2.10 . . . . . .D–2

Summary of Firmware v2.10 Parameter Changes .D–3

Detailed Parameter Listings D–4

*Sure*Servo™ Firmware Identification

You can determine the firmware version of your *Sure*Servo drive by reading P0-00.

Overview of Changes in New Firmware Versions

Firmware Version 2.105

- P0.18: Added new parameter, "Servo On Time Record"

Firmware Version 2.10

*Sure*Servo firmware version v2.10 includes the following changes:

- Reset active fault from keypad
- Torque limit function
- P0-02: Changed parameter setting 05
- P0-17: Added Output Functions Status [new parameter]
- P1-33: New parameter settings 7 and 8
- P1-56: Added Overload Output Warning Threshold [new parameter]
- P2-10~P2-17: Changed parameter setting 06
- P2-18~P2.22: New parameter setting 10
- P2-32: Changed parameter default setting
- P2-64: Added Advanced Torque Limit Mode [new parameter]
- P2-65: Added Special Input Functions [new parameter]
- P3-08: Added Digital Input Software Control Mask [new parameter]
- P4-07: Changed parameter resolution

Drive Operation Changes in Firmware Version 2.10

Reset Active Fault from Keypad

Active faults can now be reset from the keypad. Press and hold the UP and DOWN Arrow Keys simultaneously for two seconds to clear the fault.

Torque Limit Function

Torque limits are now always in effect whenever they are programmed to do so by using P1-02 and/or P1-12~P1-14. This includes the torque limits being in effect during the homing operation. With previous firmware, the torque limits were not effective until after the homing operation was completed.

Summary of Firmware v2.10 Parameter Changes

Parameters Changed in Firmware v2.10												
Parameter	Note	Description	Control Mode			Range	Units	Default	Addresses			Change
			P	V	T				Hex	Mdbs Dec	Octal	
P0-00	1	Firmware Version	Y	Y	Y	(factory set)	-	varies	0000	40001	0	now reads v2.103
P0-02		Drive Status (Front Panel Display)	Y	Y	Y	0~16	-	0	0002	40003	2	setting 05 corrected
P0-17	1	Output Functions Status (Read Only)	Y	Y	Y	0~ 1FF [h]	-	0	0011	40018	21	new parameter
P1-33	3	Position Control Mode (when using internal indexer)	Y	-	-	0~8	-	0	0121	40290	441	new settings 7~8
P1-56		Overload Output Warning Threshold	Y	Y	Y	0~120	%	120	0138	40313	470	new parameter
P2-10 ~P2-17	6	Digital Input Terminal 1~8 (DI1~DI8)	Y	Y	Y	0~145	-	varies	020A ~0211	40523 ~40530	1012 ~1021	setting 06 corrected
P2-18 ~P2-22	6	Digital Output Terminal 1~5 (DO1~DO5)	Y	Y	Y	0~110	-	varies	0212 ~0216	40531 ~40535	1022 ~1026	new setting x10
P2-32	2	Tuning Mode	Y	Y	Y	0~5	-	0	0220	40545	1040	default setting changed to 0
P2-64		Advanced Torque Limit Mode	Y	Y	-	0~3	-	0	0240	40577	1100	new parameter
P2-65		Special Input Functions	Y	Y	Y	0~ FFFF [h]	bit	0	0241	40578	1101	new parameter
P3-08		Digital Input Software Control Mask	Y	Y	Y	0~ FFFF [h]	bit	0	0308	40777	1410	new parameter
P4-07		Input Status	Y	Y	Y	0~ FFFF [h]	bit	0	0404	41032	2007	parameter now 16 bits

Notes:

1) ***Read-only register.***
2) ***Parameter cannot be set when the servo drive is enabled.***
3) ***Parameter is effective only after power to the servo drive has been cycled.***
4) ***Parameter setting not written to drive flash memory; not retained when power is off.***
5) ***Parameter does not return to factory default when P2-08 is set to 10.***
6) ***Parameter may or may not return to factory default when switching control modes, depending upon P1-01 setting.***
7) ***Block Transfer Parameters must be entered from the drive keypad.***

Control Mode Abbreviations:

P: Position control mode
T: Torque control mode
V: Velocity control mode

Parameter values are in decimal format unless otherwise indicated by "h" for hexadecimal.

Detailed Parameter Listings

Parameter Notes:
1) *Read-only register.*
2) *Parameter cannot be set when the servo drive is enabled.*
3) *Parameter is effective only after power to the servo drive has been cycled.*
4) *Parameter setting not written to drive flash memory; not retained when power is off.*
5) *Parameter does not return to factory default when P2-08 is set to 10.*
6) *Parameter may or may not return to factory default when switching control modes, depending upon P1-01 setting.*
7) *Block Transfer Parameters must be entered from the drive keypad.*

Parameter values are in decimal format unless otherwise indicated by "h" for hexadecimal.

P0-02 Drive Status (front panel display) Mem Addr: 0002[h]

Range: 0 ~ 16 Units: various
Default: 0 Control Modes: P/V/T

*** Setting 05 is corrected in firmware v2.10 to display the input frequency of the pulse command in 0.1kHz units.** (The previous firmware displayed rpm instead.)

- This parameter shows the servo drive status.

Settings:

00	Motor feedback - absolute position (counts) (10,000 counts = 1 rev)
01	Motor feedback - absolute position (revs)
02	Position command (counts)
03	Position command (revs)
04	Position error (counts)
*05	Input frequency of pulse command (0.1kHz)
06	Actual motor velocity (rpm)
07	Velocity input command (V)
08	Velocity input command (rpm)
09	Torque input command (V)
10	Torque input command (%)
11	Current load (% of rated torque)
12	Peak load (% of rated torque since powerup)
13	Bus voltage
14	Ratio of load inertia to motor inertia (J_l/J_m)
15	Motor feedback - captured position (counts)
16	Motor feedback - captured position (revs)

P0-17 [1] Output Functions Status

Mem Addr: 0011[h]

Range: 0 ~ 1FF [h]
Units: n/a
Default: 0
Control Modes: P/V/T

- **This parameter is new in firmware v2.10.**
- This parameter allows you to read the status of all DO Functions via MODBUS communications, regardless of whether or not they are assigned to physical digital outputs (DO1~DO5).

DO Functions Indications:

bit 0	Servo Ready (no faults)
bit 1	Servo On (enabled)
bit 2	At Zero Velocity
bit 3	At Velocity Reached
bit 4	At Position
bit 5	At Torque Limit
bit 6	At Overload Output Warning Threshold
bit 7	Active Fault
bit 8	Electromagnetic Brake Control
bit 9~15	reserved

P0-18 [1][5] Servo On Time Record

Mem Addr: 0012[h]

Range: 0 ~ 65,535
Units: hr
Default: 0
Control Modes: P/V/T

- **This parameter is new in firmware v2.105.**
- This parameter stores and displays the total time that the servo drive is ON. It is written to EEPROM once per hour.

P1-33 [3] Position Control Mode (Internal Indexer) Mem Addr: 0121[h]

Range: 0 ~ 8 Units: n/a
Default: 0 Control Modes: Pr

*** Settings 7 and 8 are new with firmware v2.10.**

- This parameter determines the specific type of control when using Pr control mode (P1-01) with the internal indexer. (Refer to Chapter 5 for explanation and examples of Index Mode and internal position indexing.)

Settings:

0	Absolute Position Mode (Absolute Positioning): The system will move to new positions based on the values set in P1-15 ~ P1-30, which are interpreted as target positions referenced from the home position.
1	Incremental Position Mode (Incremental Positioning): The system will move to new positions based on the values set in P1-15 ~ P1-30, which are interpreted as distances to move from the current position.
2	Forward Operation Index Mode: The system will go to the programmed index position only in the forward direction.
3	Reverse Operation Index Mode: The system will go to the programmed index position only in the reverse direction.
4	Shortest Path Index Mode: The system will go to the programmed index position by determining and using the shortest path and direction.
5	Absolute Auto Position Mode: The system will move to new positions, referenced from the home position, based on the Auto Position Mode internal function. The Auto Position Mode DI (setting 42 of P2-10~P2-17) acts as a level trigger for this move.
6	Incremental Auto Position Mode The system will move to new positions, referenced from the current position, based on the Auto Position Mode internal function. The Auto Position Mode DI (setting 42 of P2-10~P2-17) acts as a level trigger for this move.
*7	Absolute One-Cycle Auto-Running Mode: This setting operates the same as setting #5, except that the DI acts as an edge trigger, and initiates only one cycle.
*8	Incremental One-Cycle Auto-Running Mode: This setting operates the same as setting #6, except that the DI acts as an edge trigger, and initiates only one cycle.

P1-56 Overload Output Warning Threshold

Mem Addr: 0138[h]

Range: 0 ~ 120 Units: %
Default: 120 (disabled) Control Modes: P/V/T

- **This parameter is new in firmware v2.10.**
- This parameter sets the level of the overload output warning threshold. When the system reaches threshold time level set by this parameter, it activates the Overload Warning DO signal (P2-18~P2-22 = 10; new setting in this firmware) and displays ALE23 on the LED Display. (ALE23 does not need to be cleared since it is only a warning, rather than a fault.)
- The setting of this parameter is a percentage of the continuous overload time required to initiate the Overload Fault ALE06. (The ALE06 Overload Fault times are set by P1-31 and are discussed in Chapter 1 of this manual.)
- $t_{OL\ warning} = (t_{OL\ fault}) \times$ (setting value of P1-56)
- Example for 100~750W systems operating at 200% OL, and P1-56 = 60%:
  For 100~750W systems, $t_{OL\ fault}$ @ 200% OL = 8s per Chapter 1 OL charts.
  $t_{OL\ warning} = (8s) \times (60\%) = 4.8s$
- Disable this parameter by setting it higher than 100%, so that the drives faults before it reaches the O/L Warning.

P2-10 [6] Digital Input Terminal 1 (DI1) Mem Addr: 020A[h]

P2-17 [6] Digital Input Terminal 8 (DI8) Mem Addr: 0211[h]

Range: 0 ~ 145 Units: n/a
Default: varies Control Modes: P/V/T

*** DI Function setting 06 is corrected in firmware v2.10 to invert the command polarity.**

- Parameters P2-10 ~ P2-17 determine the functions and active states of DI1 ~ DI7, respectively.

Settings:

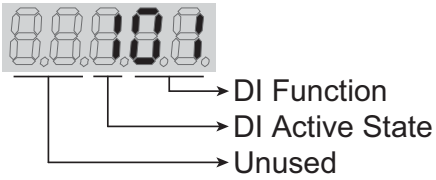

DI Function Settings (P2-10 ~ P2-17):

00	Input Disabled	
01	Servo Enable	
02	Alarm Reset	
03	Gain Boost Switch	
04	Clear Command (see P2-50)	
05	Low Velocity Clamp (see P1-38)	
*06	Command Input Polarity Inverts the polarity of the AI Input Command Voltage by multiplying by -1; i.e. +V bcomes -V and vise-versa	
07	Position Command Pause (Internal Indexer only)	
08	Command Trigger (available in Pr mode only)	
09	Torque Limit Enable (bi-directional) (see DI settings 25, 26; P1-02, P1-12, P2-64)	
10	Velocity Limit Enable (see P1-02, P1-09)	
11	Position Command Select 0	(PCS0)
12	Position Command Select 1	(PCS1)
13	Position Command Select 2	(PCS2)
14	Velocity Command Select 0	(VCS0)
15	Velocity Command Select 1	(VCS1)
16	Torque Command Select 0	(TCS0)
17	Torque Command Select 1	(TCS1)
18	Position/Velocity Mode Select (0=Vel., 1=Pos.)	(dual control)
19	Velocity/Torque Mode Select (0=Vel., 1=Torq.)	(dual control)
20	Position/Torque Mode Select (0=Torq., 1=Pos.)	(dual control)
21	Fault Stop (Normally Closed)	
22	Reverse Inhibit (Overtravel - Normally Closed)	
23	Forward Inhibit (Overtravel - Normally Closed)	
24	Home Sensor	
25	Torque Limit Enable Reverse (reverse direction only) (see DI settings 09, 26; P1-02, P1-12, P2-64)	
26	Torque Limit Enable Forward (forward direction only) (see DI settings 09, 25; P1-02, P1-13, P2-64)	
27	Start Home Move Trigger	

P2-10 ~ P2-17 DI Function Settings (continued):

28	Index Mode Select 0	(IMS0)
29	Index Mode Select 1	(IMS1)
30	Index Mode Select 2	(IMS2)
31	Index Mode Select 3	(IMS3)
32	Index Mode Select 4	(IMS4)
33	Index Mode Control 0	(IMC0)
34	Index Mode Control 1	(IMC1)
35	Index Mode - Manual Continuous Operation	
36	Index Mode - Manual Single Step Operation	
37	Jog Forward	
38	Jog Reverse	
39	Step Reverse (Pr mode only)	
40	Step Forward (Pr mode only)	
41	Return to Index 1 (Auto Index Mode only); return motor to 1st position	
42	Auto Position mode	
43	Electronic Gear Numerator Select 0 (EGNS0) (see P2-60 ~ P2-62)	
44	Electronic Gear Numerator Select 1 (EGNS1) (see P2-60 ~ P2-62)	
45	Inhibit Pulse Command - Terminal Causes external pulse input command to be invalid.	

1) When P2-10 ~ P2-17 are set to zero (0), the corresponding inputs are disabled.
2) Settings 11~17 are for single control modes; 18~20 are for dual control modes.

DI Active State Settings: (P2-10 ~ P2-17):

0	Normally Closed (use N.C. contact)
1	Normally Open (use N.O. contact)

Examples (for P2-10 ~ P2-17):

- Setting 101 configures this input for Servo On command, and requires a normally open contact to be connected to it.
- Setting 21 configures this input for Fault Stop circuit monitoring and requires a normally closed contact to be wired to it.

P2-18 [6] Digital Output Terminal 1 (DO1) Mem Addr: 0212[h]

P2-22 [6] Digital Ouput Terminal 5 (DO5) Mem Addr: 0216[h]

Range: 0 ~ 110 Units: n/a
Default: varies Control Modes: P/V/T

*** DO Function setting 10 is new with firmware v2.10.**

- If P2-44 is set to its default value of zero (0), parameters P2-18 ~ P2-22 determine the functions and active states of DO1 ~ DO5, respectively.

Settings:

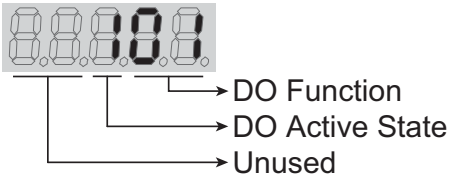

DO Function Settings (P2-18 ~ P2-22):

00	Output Disabled
01	Servo Ready (no faults)
02	Servo On (enabled)
03	At Zero Velocity
04	At Velocity Reached
05	At Position
06	At Torque Limit
07	Active Fault
08	Electromagnetic Brake Control
09	Homing Completed
*10	At Overload Output Warning Threshold

DO Active State Settings: (P2-18 ~ P2-22):

0	Acts like a Normally Closed contact
1	Acts like a Normally Open contact

Examples for P2-18 ~ P2-22:

- Setting 101 configures this output as a Servo Ready indicator, and the output functions like a normally open contact.
- Setting 005 configures this output as an At Position Indicator, and the output functions like a normally closed contact.

1) P2-18 ~ P2-22 are effective only if P2-44 is set to zero (0).
2) When P2-18 ~ P2-22 DO Function digits are set to zero (0), the corresponding outputs are disabled.

P2-32 [2] Tuning Mode

Mem Addr: 0220[h]

Range: 0 ~ 5 Unit: n/a
Default*: 0 Control Modes: P/V/T

*** The default value for this parameter is changed in firmware v2.10 to 0 (Manual Tuning Mode).** (The previous firmware defaulted to 4.)

Settings:

0	Manual Tuning Mode
1	Easy-Tune Mode
2	PI Adaptive Auto-Tune Mode
3	PI Fixed Auto-Tune Mode (ratio is fixed; response levels are adjusted)
4	PDFF Adaptive Auto-Tune Mode
5	PDFF Fixed Auto-Tune Mode (ratio fixed; response levels are adjusted)

- PI = Proportional - Integral control
- PDFF = Pseudo-Derivative Feedback and Feedforward control

Explanation of Auto-tuning:

1. When switching from mode 2 or 4 to mode 3 or 5 (fixed ratio modes), the system will save the measured load inertia value automatically to P1-37 and then set the other corresponding auto tune parameters accordingly.
2. When switching from mode 2 or 4 to mode 0 (manual mode), load measurements will cease and all parameters will be set to system defaults.
3. When switching from mode 0 to mode 3 or 5 (fixed ratio modes), P1-37 should be set to the proper mismatch ratio.
4. When switching from mode 3 to mode 0 (manual mode), P2-00, P2-04 and P2-06 will retain the values determined by the auto-tune mode.
5. When switching from mode 5 to mode 0 (manual mode), the setting value of P2-00, P2-04, P2-06, P2-25 and P2-26 will retain the values determined by the auto-tune mode.

P2-64 Advanced Torque Limit

Mem Addr: 0240[h]

Range: 0 ~ 3 | Units: n/a
Default: 0 | Control Modes: P/V

- **This parameter is new in firmware v2.10.**
- This parameter allows you to use a variable analog input Torque Limit whose range is clamped by one or more separate fixed Torque Limits. The drive applies whichever applicable limit is more restrictive; variable or fixed.
- The Torque Limit function must be enabled by P1-02 = 1x, or by a DI with setting P2-10~P2-17 = 9, 25, or 26. Different clamping characteristics are available depending upon which enabling method you use. Use only one of the methods to enable the Torque Limit function.

» NTL = Negative Torque Limit

» PTL = Positive Torque Limit

» T_REF = Analog Torque Input
= CN1 #18

» TL_N = Applied Negative Torque Limit

» TL_P = Applied Positive Torque Limit

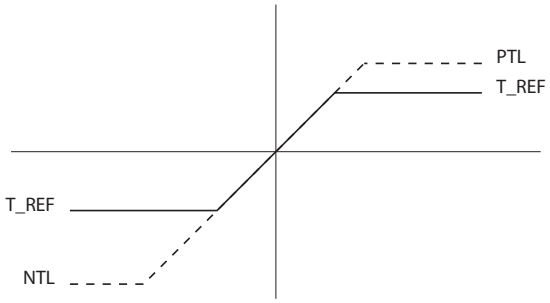

Settings:

0 Disable Advanced Torque Limit function

1 Bi-directional Torque Limit
(Torque Limit applies in both forward and reverse directions)

If |T_REF| < PTL	TL_P = T_REF
If |T_REF| > PTL	TL_P = PTL
If |T_REF| < |NTL|	TL_N = T_REF
If |T_REF| >|NTL|	TL_N = NTL

Torque Limit Clamp Selection for P2-64 = 1

Torque Enable Method	Motor Direction	Torque Comand Select DI		Active Torque Clamp
		TCS1 (17)	TCS0 (16)	
P1-02 = 1x or DI: P2-10~P2-17 = 09	forward (+) or reverse (-)	0	0	Pt, V Modes: T_REF AI Pr, Vz Modes: 0 torque
		0	1	NTL = PTL from P1-12
		1	0	NTL = PTL from P1-13
		1	1	NTL = PTL from P1-14
DI: P2-10~P2-17 = 25	forward (+)	N/A		NTL = PTL from T_REF
	reverse (-)			NTL = PTL from P1-12
DI: P2-10~P2-17 = 26	forward (+)	N/A		NTL = PTL from P1-13
	reverse (-)			NTL = PTL from T_REF
TCS = Torque Command Select DI function; P2-10~P2-17 = 16 (TCS0) & 17 (TCS1).				

P2-64 Settings (continued):

2 Forward Torque Limit (Torque Limit applies only in forward direction)

If T_REF < 0 $TL_P = 0$

If 0 < T_REF < |PTL| $TL_P = T_REF$

If T_REF > |PTL| $TL_P = PTL$

Torque Limit Clamp Selection for P2-64 = 2				
Torque Enable Method	Motor Direction	Torque Comand Select DI		Active Torque Clamp
		TCS1 (17)	TCS0 (16)	
P1-02 = 1x or DI: P2-10~P2-17 = 09	forward (+) or reverse (-)	0	0	NTL = 0 torque PTL = T_REF AI
		0	1	NTL = 0 torque PTL = P1-12
		1	0	NTL = 0 torque PTL from P1-13
		1	1	NTL = 0 torque PTL from P1-14
DI: P2-10~P2-17 = 25	forward (+)	N/A		NTL = 0 torque PTL = T_REF AI
	reverse (-)			NTL = 0 torque PTL = P1-12
DI: P2-10~P2-17 = 26	forward (+)	N/A		NTL = 0 torque PTL = P1-13
	reverse (-)			NTL = 0 torque PTL = T_REF AI
TCS = Torque Command Select DI function; P2-10~P2-17 = 16 (TCS0) & 17 (TCS1).				

P2-64 Settings (continued):

3 Reverse Torque Limit (Torque Limit applies only in reverse direction)

If T_REF > 0 $TL_N = 0$

If -|NTL| < T_REF < 0 $TL_N = -T_REF$

If T_REF < -|NTL| $TL_N = NTL$

Torque Limit Clamp Selection for P2-64 = 3				
Torque Enable Method	Motor Direction	Torque Comand Select DI		Active Torque Clamp
		TCS1 (17)	TCS0 (16)	
P1-02 = 1x or DI: P2-10~P2-17 = 09	forward (+) or reverse (-)	0	0	NTL = T_REF AI PTL = 0 torque
		0	1	NTL = P1-12 PTL = 0 torque
		1	0	NTL from P1-13 PTL = 0 torque
		1	1	NTL from P1-14 PTL = 0 torque
DI: P2-10~P2-17 = 25	forward (+)	N/A		NTL = T_REF AI PTL = 0 torque
	reverse (-)			NTL = P1-12 PTL = 0 torque
DI: P2-10~P2-17 = 26	forward (+)	N/A		NTL = P1-13 PTL = 0 torque
	reverse (-)			NTL = T_REF AI PTL = 0 torque
TCS = Torque Command Select DI function; P2-10~P2-17 = 16 (TCS0) & 17 (TCS1).				

P2-65 Special Input Functions

Mem Addr: 0241[h]

Range: 0 ~ FFFF [h]
Default: 0

Units: bit
Control Modes: P/V/T

- **This parameter is new in firmware v2.10.**
- This is a multi-function parameter that controls the behavior of several different DI and DO/alarm functions. For most applications this parameter does not need to be changed. However, if you require some different behavior from some of the inputs or Alarm 08, you can modify certain behaviors by turning the parameter bits ON or OFF as described. Set these parameter bits directly through software, or manually set the parameter to the hexadecimal number that forms the binary bit pattern required for your application.

<table>
<tr><td>P2-65 Bit Number</td><td>15</td><td>14</td><td>13</td><td>12</td><td>11</td><td>10</td><td>9</td><td>8</td><td>7</td><td>6</td><td>5</td><td>4</td><td>3</td><td>2</td><td>1</td><td>0</td></tr>
<tr><td>Applicable DI or DO</td><td colspan="5" rowspan="2">n/a</td><td>DI 1~8</td><td colspan="3" rowspan="2">n/a</td><td>DO 1~5</td><td rowspan="2">n/a</td><td colspan="3">DI8</td><td>DI 1~8</td><td>DI 1~8</td></tr>
<tr><td>DI or DO Function Setting</td><td>05</td><td>07; ALE08</td><td colspan="3">new function</td><td>16, 17</td><td>14, 15</td></tr>
</table>

Settings:

Bit 0 — Contact type for DI assigned as VCS0 and VCS1 (P2-10~P2-17 codes 14 and 15).
0 level sensing
1 rising edge sensing

Bit 1 — Contact type for DI assigned as TCS0 and TCS1 (P2-10~P2-17 codes 16 and 17).
0 level sensing
1 rising edge sensing

Bit 2 — Contact type for DI8 when assigned as Fast DI per bits 3~4 of this parameter (P2-65).
0 rising edge trigger or normally open contact
1 falling edge trigger or normally closed contact

Bits 3~4

B4	B3	DI8 Function
0	0	Disable Fast DI function for DI8
0	1	Enable Fast Position Latch for DI8: This is a new DI function that works in conjunction with P0-04~P0-05 Status Monitor setting 15 or 16. DI8 serves as a fast trigger to latch Position Counts (15) or Position Revs (16) into a Status Monitor.
1	0	Enable Fast DI Inhibit for DI8: Works in conjunction with P2-17 = 07 (Position Command Pause) or 45 (Inhibit Pulse Command - Terminal). Initiates quicker stop; Fast DI response time is 0.0~0.1 ms (vs. 0.4~0.6 ms for normal DI).

Bit 5 — reserved; must remain set = 0

Bit 6 — Disable ALE08 Abnormal Pulse Control Command alarm
0 Enable ALE08 for Pulse Control Command > 570 kpps
1 Disable ALE08 for Pulse Control Command > 570 kpps

Bits 7~9 — reserved; must remain set = 0

P2-65 Settings (continued):

Bit 10 System behavior when zero velocity clamp conditions are met; when Low Velocity Clamp DI (P2-10~P2-17 code 05) is active and the velocity of the motor is less than P1.38 setting; valid only in velocity modes.
0 Motor halts at present position; ramp settings disregarded
1 Velocity command is forced to 0rpm using ramp settings

Bit 11~15 reserved; must remain set = 0

P3-08 Digital Input Software Control Mask

Mem Addr: 0308[h]

Range: 0 ~ FFFF [h] Units: bit
Default: 0 Control Modes*: P/V/T

- **This parameter is new in firmware v2.10.**

*** The upper eight bits of this parameter are effective only in Pr Mode.**

- The lower byte of this parameter allows some or all of the drive's Digital Inputs to be controlled via Modbus communications instead of via external hardware. The DIs are controlled by external hardware by default. Control of any or all of the DIs can be changed to Modbus communication by setting the corresponding bit of the P3-08 lower byte to a logic one.
- The upper byte of this parameter provides an additional eight Virtual Digital Inputs for use only in Pr control mode. These Virtual DI have factory assigned functions, and are controlled only via Modbus communications
- Use P4-07 to write to the actual and virtual DI that are enabled and configured for Modbus control using this parameter (P3-08).

P3-08 Bit #	15	14	13	12	11	10	9	8	7	6	5	4	3	2	1	0
Actual CN1 DI	-	-	-	-	-	-	-	-	DI8	DI7	DI6	DI5	DI4	DI3	DI2	DI1
Pr Mode Virtual DI	DI16	DI15	DI14	DI13	DI12	DI11	DI10	DI9	-	-	-	-	-	-	-	-

P3-08 Virtual DI Factory Assigned Functions			
Bit #	DI #	DI Function Code	DI Function Description
8	9	08	Command Trigger (Pr mode only)
9	10	11	Position Command Select 0 (PCS0)
10	11	12	Position Command Select 1 (PCS1)
11	12	13	Position Command Select 2 (PCS2)
12	13	02	Alarm Reset
13	14	27	Start Home Move Trigger
14	15	37	Jog Forward
15	16	38	Jog Reverse

Settings:

Bit 0~7; DI1~DI8: 0 DI controlled by external hardware
1 DI controlled by Modbus communications

Bit 8~15; DI9~DI16; 0 Disable Virtual DI
1 Enable Virtual DI control via Modbus communications

If a virtual DI and an actual DI are set to the same function, that function is handled as a logical OR. The function is active if either DI is active.

P4-07 Input Status

Mem Addr: 0407[h]

Range*: 0 ~ FFFF [h]
Units: bit
Default: 0[h]
Control Modes: P/V/T

*** The range for this parameter is increased in firmware v2.10 from eight bits to 16 bits. It can also now be written to via Modbus communications in conjunction with P3-08.**

- Use this parameter to read the status of the digital inputs (Refer to P2-10 ~ P2-17 to assign DI functions). The least significant bit (bit 0) shows DI1 status, and bit 7 shows DI8 status.
- Use this parameter in conjuction with P3-08 to change the status of actual and virtual Digital Inputs via Modbus communications.

BLANK
PAGE

BLANK
PAGE