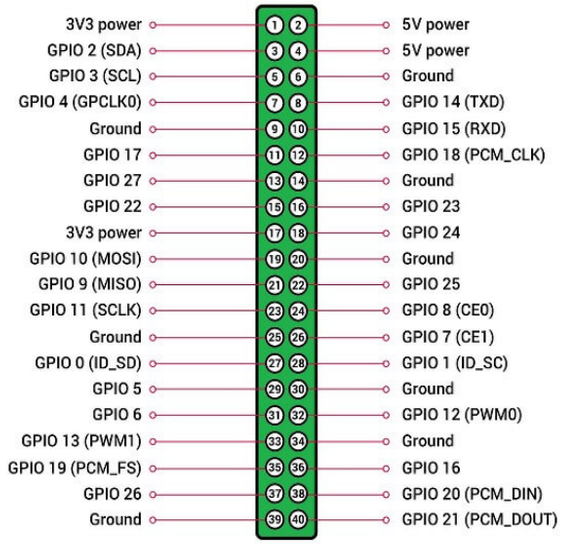

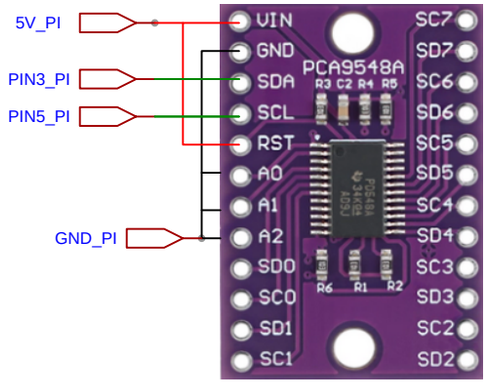

PCA9548A

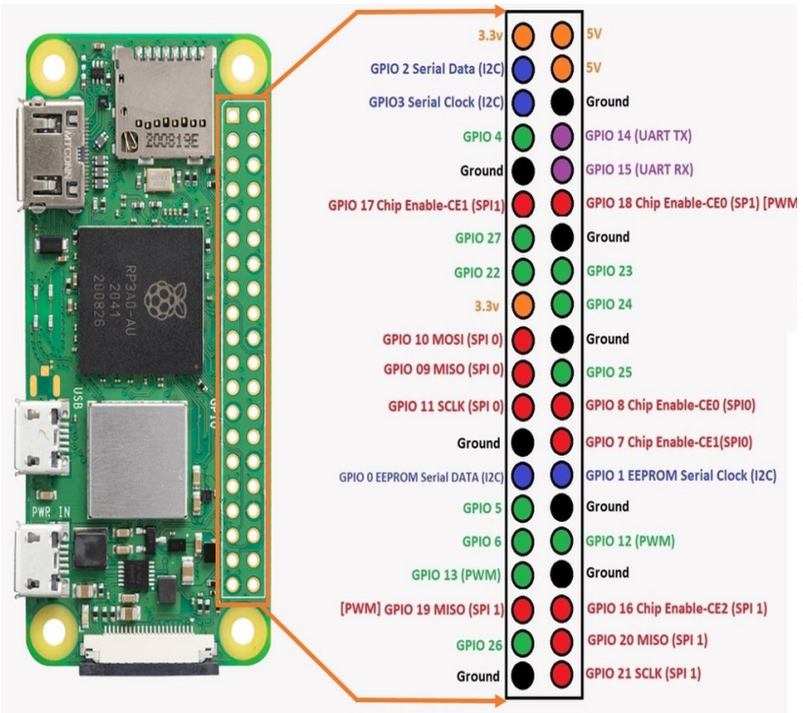

Pi Zero 2W

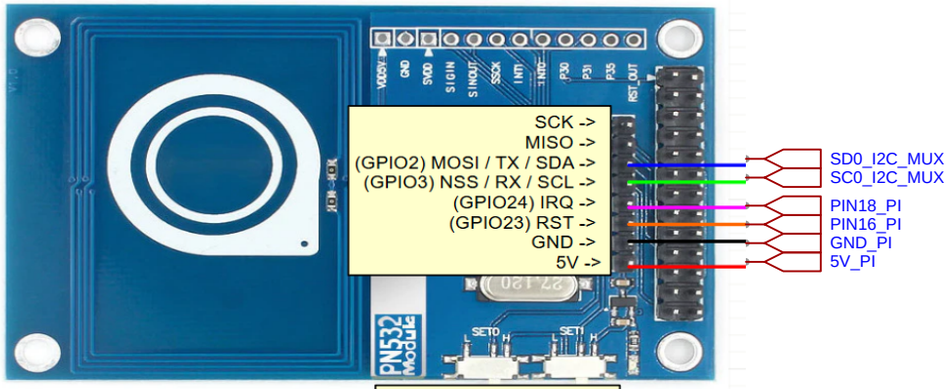

PN532 NFC Reader 1

UART	L	L
SPI	L	H
I2C	H	L

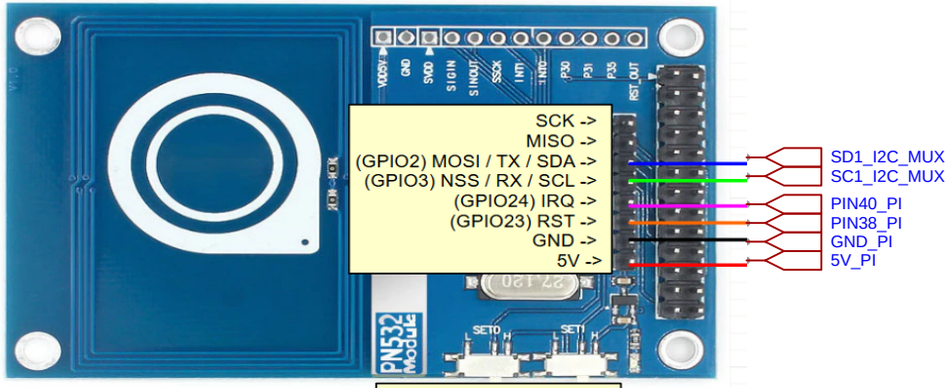

PN532 NFC Reader 2

UART	L	L
SPI	L	H
I2C	H	L