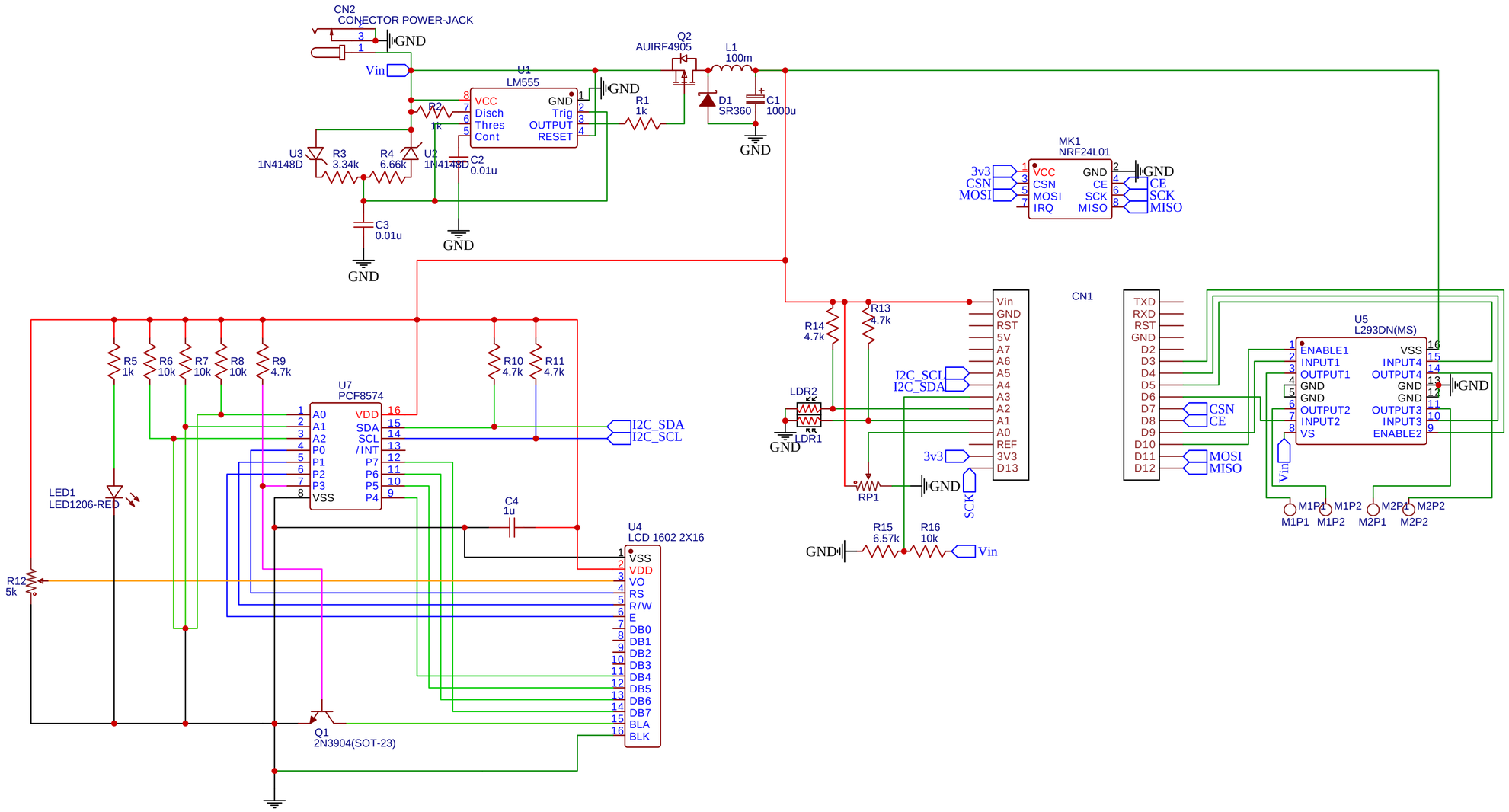

TITLE: Final PCB Design		REV: 1.0
EasyEDA	Company: McDonnel Douglas	Sheet: 1/1
	Date: 2025-01-25 Drawn By: madhursharma9	