KALPATARU INSTITUTE OF TECHNOLOGY, TIPTUR- 572201

Department of Electronics and Communication Engineering.

A Synopsis Presentation on

"RFID Based Attendance System Using NodeMCU"

Presented by:

Ashwini K USN : 1KI21EC009

Kruthika M R USN : 1KI21EC046

Madhurya Jain M S USN : 1KI21EC053

Ranjitha M V USN : 1KI21EC078

Under The Guidance of:

C Prathibha,

Assistant Professor,

Dept of ECE, K.I.T., Tiptur.

Contents :

- Objective
- Introduction
- Literature survey
- Methodology - Block diagram
- System Hardware & Software
- Advantages & Disadvantages
- Applications
- Expected Result
- Conclusion
- References

Objective :

- To develop an IoT-based Digital Attendance System using fingerprint recognition and RFID technology. This system aims to automate attendance tracking, provide real-time monitoring, and send SMS alerts via GSM.
- It will also offer web access through ESP32 for easy management of attendance records.
- The goal is to enhance efficiency and security in attendance management across various applications.

Introduction :

- The IoT-based digital attendance system is a smart solution designed to automate attendance tracking using various technologies. It combines RFID tags, fingerprint scanners, and GSM for notifications, all connected through an ESP32 microcontroller. This system allows users to mark their attendance easily and securely. The data is stored in a MySQL database, and a web page provides real-time access to attendance records and notifications. This project aims to enhance efficiency, accuracy, and security in managing attendance for schools, offices, and other organizations.

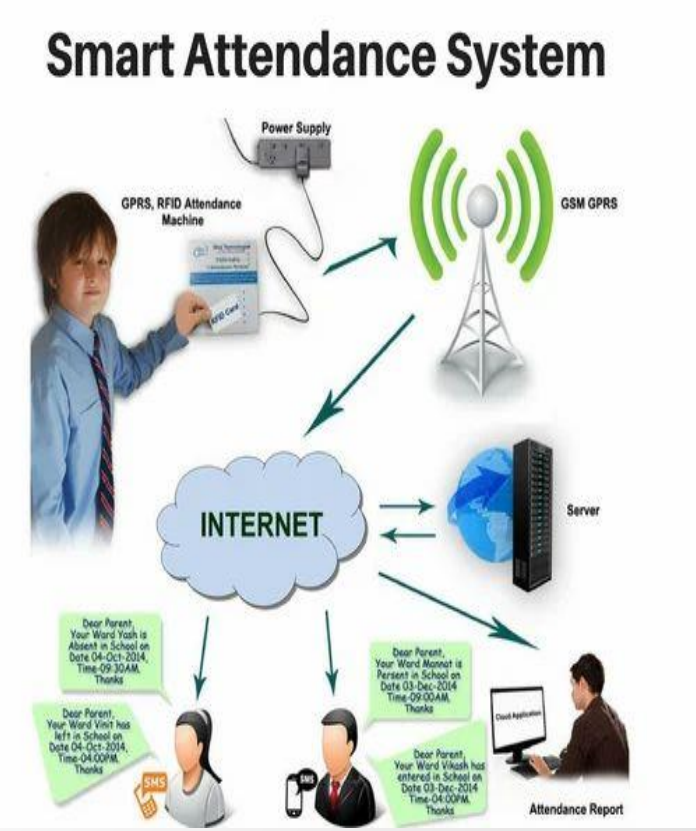

Literature Survey :

- **Accuracy of Biometric Systems:** Studies indicate that fingerprint recognition significantly reduces attendance errors compared to traditional methods.
- **Efficiency of RFID Technology:** Research demonstrates that RFID systems streamline attendance tracking, allowing for quick and accurate logging.
- **Real-Time Monitoring:** Literature highlights the importance of IoT integration for enabling real-time attendance data access and management
- **GSM Alerts for Notifications:** Previous studies emphasize the effectiveness of GSM technology in sending instant SMS alerts for attendance updates.
- **User-Friendly Interfaces:** Research suggests that incorporating web-based platforms, like those using ESP32, enhances user experience and accessibility in attendance systems.

Methodology - Block Diagram :

The RFID-based attendance system utilizes an **ESP32 NodeMCU** as the core controller to automate attendance tracking. Students authenticate their presence using **RFID tags** and a **fingerprint sensor**, ensuring dual-layer verification. The collected attendance data is transmitted to a **webpage**, where authorized users can log in using a **password** to monitor records. A **GSM module** sends real-time **SMS alerts** to parents' mobile numbers upon successful authentication. The system efficiently stores attendance records in a **MySQL database**, enabling secure and organized data management for future access and analysis.

Methodology - Block Diagram :

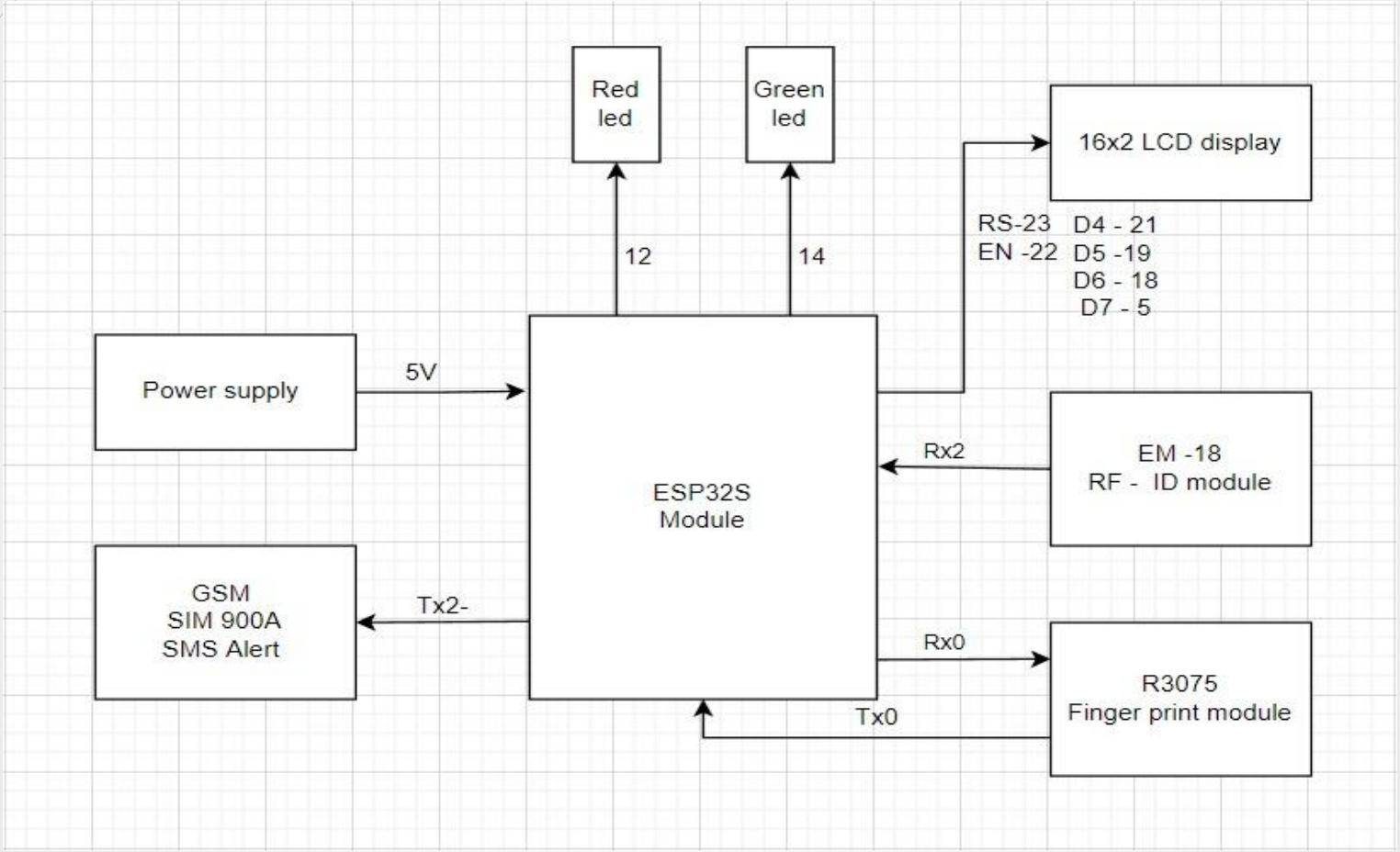

Working :

- The IoT-Based Digital Attendance System streamlines attendance tracking using RFID tags and fingerprint authentication. When a user taps an RFID tag or scans their fingerprint, the ESP32 microcontroller verifies this data against records in a MySQL database. Once verified, attendance is logged, and the GSM module sends an SMS notification for confirmation. A webpage interface allows administrators to access, view, and manage attendance data in real-time. This system provides an efficient, secure, and automated solution for attendance management, with real-time notifications and easy record access.

Hardware Tools :

1)

ESP32 – S module

2)

16*2 LCD Display

3)

GSM SIM 900A(SMS Alert)

4)

5V Power Supply

5)

RFID Cards

6)

EM – 18 RF-ID module

7)

R3075 Finger print module

8)

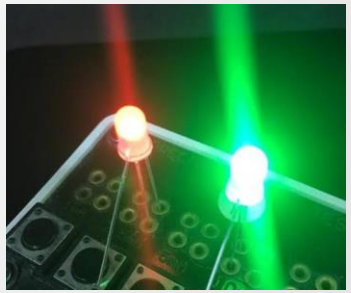

Red & Green LED Indicator

Software Tools :

- **Arduino Software (IDE):** Programs and uploads code to ESP32 and Node MCU; used for testing and debugging.
- **SYNOChip:** SYNOChip finger print changing Software is tool used to modify or update Stored finger print templates in biometrics system for reenrollement or Correction Purposes.
- **Embedded C Programming:** Writes efficient code to control microcontroller tasks, like RFID reading and SMS notifications.
- **MySQL:** Database management system to store attendance records and user data.

Arduino IDE

SYNOChip

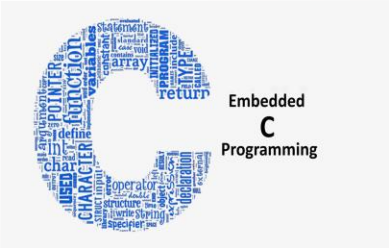

Embedded C

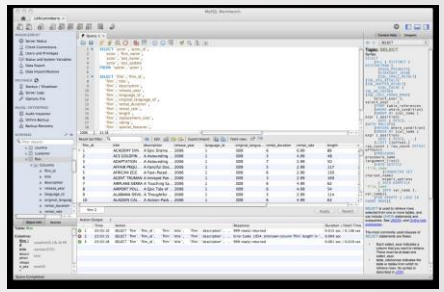

MYSQL Database

Advantages and Disadvantages :

➢ ADVANTAGES :

- Increased Accuracy.
- Time-Saving.
- Enhanced Security.
- Real-Time Notifications.
- Centralized Data Storage.
- User-Friendly Interface.
- Scalability.
- Data Analytics.
- Remote Access.
- Integration Capabilities.

➢ DISADVANTAGES :

- Initial Setup Cost.
- Technical Issues.
- Privacy Concerns.
- Power Dependency.
- Training Needs.

Applications :

- School Attendance Monitoring.
- Employee Time Tracking in Corporations.
- Visitor Management at Secure Facilities.
- Event Attendance Verification for Conferences.
- Remote Worker Attendance Management.
- Patient Check-In System in Healthcare.
- Sports Event Attendance Tracking.
- Library Entry and Exit Monitoring.
- Child Safety in Daycare Centers.
- Public Transport User Tracking and Management

Expected Result :

Logout

STUDENT NAME	STUDENT CLASS	STUDENT STATUS	Date / Time
Ranjitha	1KI21EC053	OUT	2024-10-25 19:53:27
Kruthika	1KI21EC046	OUT	2024-10-25 19:53:05
Ashwini	1KI21EC009	OUT	2024-10-25 19:52:43
MadhuryaJain	1KI21EC078	IN	2024-10-25 19:52:18
Ranjitha	1KI21EC053	IN	2024-10-25 19:52:00
Kruthika	1KI21EC046	IN	2024-10-25 19:51:39
Ashwini	1KI21EC009	IN	2024-10-25 19:51:13

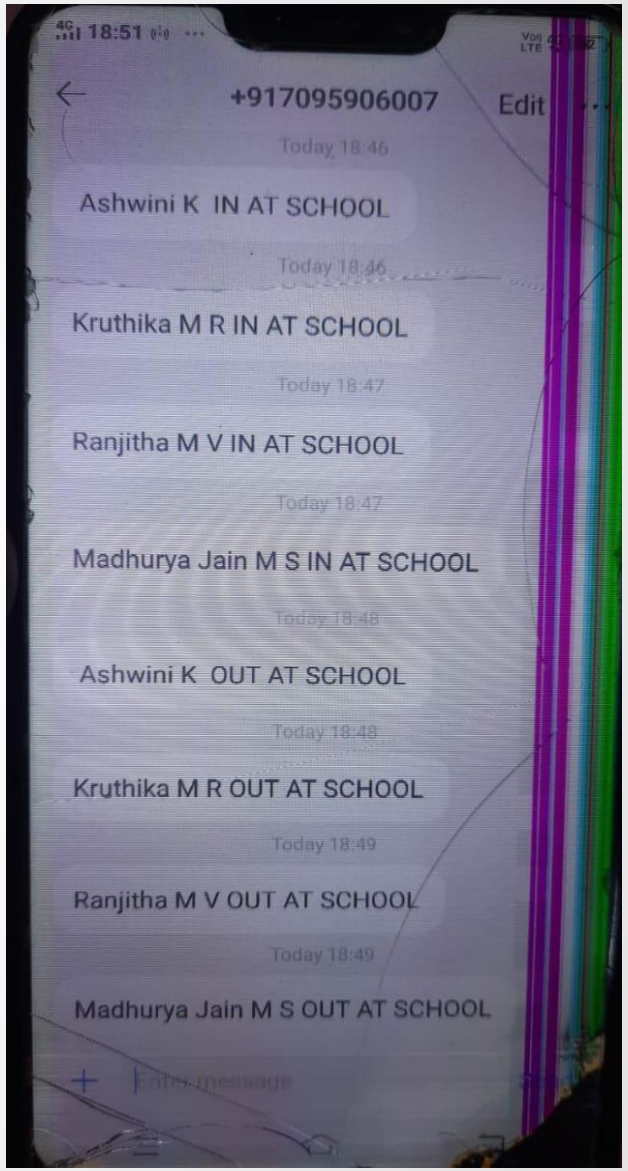

School Attendance Monitoring System Using RFID, Fingerprint, SMS Alerts, and MySQL Database is an automated solution designed to efficiently manage student attendance in educational institutions.

Conclusion :

The IoT-Based Digital Attendance System using RFID, fingerprint, GSM SMS notifications, and MySQL database successfully automates attendance tracking, enhancing accuracy, security, and real-time accessibility through a centralized platform. This system reduces manual workload and errors while providing a user-friendly interface for efficient management.

Future Scope :

Future enhancements include developing a mobile app, cloud storage integration for scalability, advanced data analytics, and machine learning for anomaly detection. These upgrades will further improve the system’s security, accessibility, and adaptability for various organizational needs.

References :

[1] “IoT in Attendance Management” (A. Prasad et al., 2019) This appears to be based onacademic papers or reviews discussing IoT applications in attendance systems. Search for papers by A. Prasad published around 2019 related to IoT-based attendance frameworks.

[2] “RFID Technology for Identification” (K. Singh et al., 2020) Research discussing the role of RFID in attendance systems. Look for works by K. Singh, particularly studies focused on RFID use in educational or corporate attendance tracking.

[3] “Fingerprint Biometrics for Enhanced Security” (M. Kumar et al., 2021) This discusses the use of fingerprint biometrics for attendance. Papers by M. Kumar related to biometrics and attendance systems in 2021 would be the source.

[4] “GSM and SMS Notification System” (S. Gupta et al., 2018) Referencing GSM and SMS notifications in attendance systems. Check for works by S. Gupta from 2018 on GSM modules and their application in academic or workplace settings.

[5] “ESP32 Microcontroller for IoT Applications” (J. Reddy et al., 2019)This relates to IoT applications with ESP32. Research by J. Reddy around 2019 on ESP32’s use in IoT systems would be relevant.

Thank You