Revision History			
Rev	Description	Date (YYYY-MM-DD)	Approved
-			

NOTE:

1. THREAD CLASS: ALL THREADED FEATURES NOT EXPLICITLY NOTED ARE \MATHBF{\TEXT{CLASS}~2\TEXT{B}} FIT.

2. BLIND HOLE DEPTH: TAPPED BLIND HOLES ARE DIMENSIONED TO THE \MATHBF{\TEXT{FULL~THREAD~DEPTH}}, NOT THE DRILL DEPTH.

3. THREAD RELIEF: RUNOUTS AND THREAD RELIEFS ARE PERMISSIBLE UNLESS OTHERWISE RESTRICTED.

4. TORQUE SPEC (M4): ALL \TEXT{M4} FASTENERS REQUIRE A TORQUE OF \MATHBF{3.0 \PM 0.5 \TEXT{ N}\CDOT\TEXT{M}}.

5. LOCKING ELEMENT: WHERE THREADS ARE SHOWN IN AN ASSEMBLY, USE MEDIUM STRENGTH THREADLOCKER (E.G., LOCTITE 243).
6. HELICAL INSERTS: ALL \TEXT{M6} TAPPED HOLES FOR STRUCTURAL CONNECTIONS REQUIRE \MATHBF{\TEXT{M}6 \TIMES 1.0 \TIMES 1.5\TEXT{D} \TEXT{ HELICAL~INSERTS}}.

7. THREAD CALLOUT: METRIC COARSE THREADS ARE THE DEFAULT FOR GENERAL FASTENERS.

8. HOLE SIZE (GENERAL): UNDIMENSIONED HOLES ARE FOR CLEARANCE OF \MATHBF {\TEXT{M}4} FASTENERS.
9. FASTENER COATING: ALL SUPPLIED FASTENERS MUST HAVE A ZINC CHROMATE FINISH.

8 TAPPING FLUID: ENSURE TAPPING OPERATION IS PERFORMED WITH APPROPRIATE CUTTING FLUID FOR \MATHBF{6061-\TEXT{T}6}.

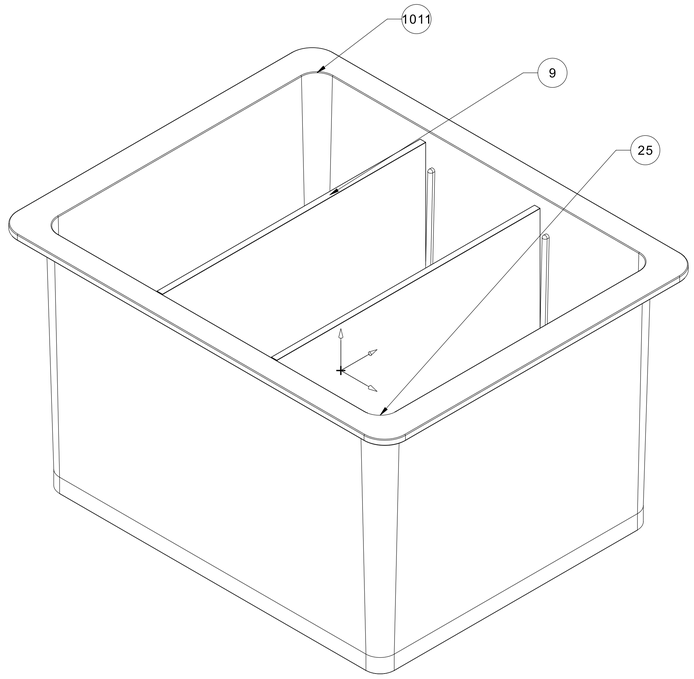

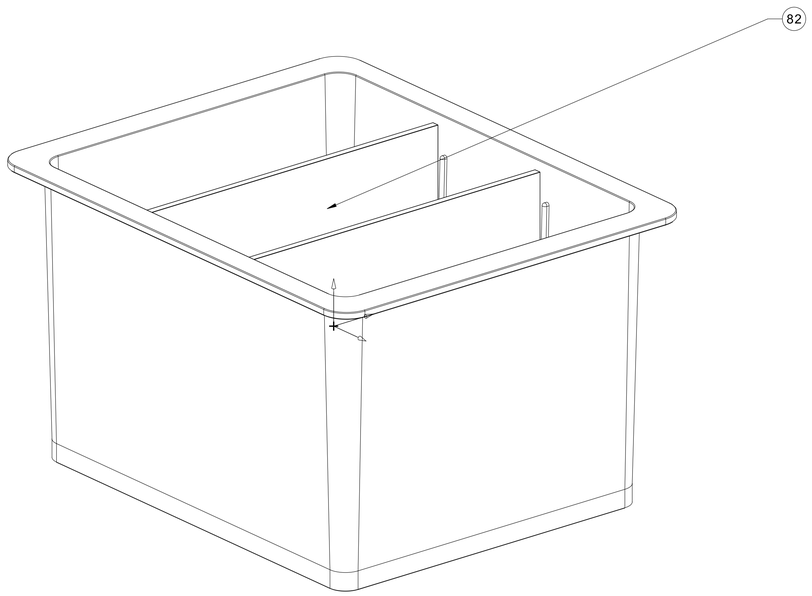

ISOMETRIC VIEW

Similar To: NONE	Created By: DESIGNER		MLI 007
First Made For: NONE	Approved By: ENGG		IEC61355 NO.
THIRD ANGLE PROJECTION	Document Type: DETAIL		Sheet Size E
	Document Title: Ai_test_7		
Creation Date (YYYY-MM-DD) 2025-10-27	Drawing Number: Ai_Test_7	Revision -	Sheet 1 OF 3

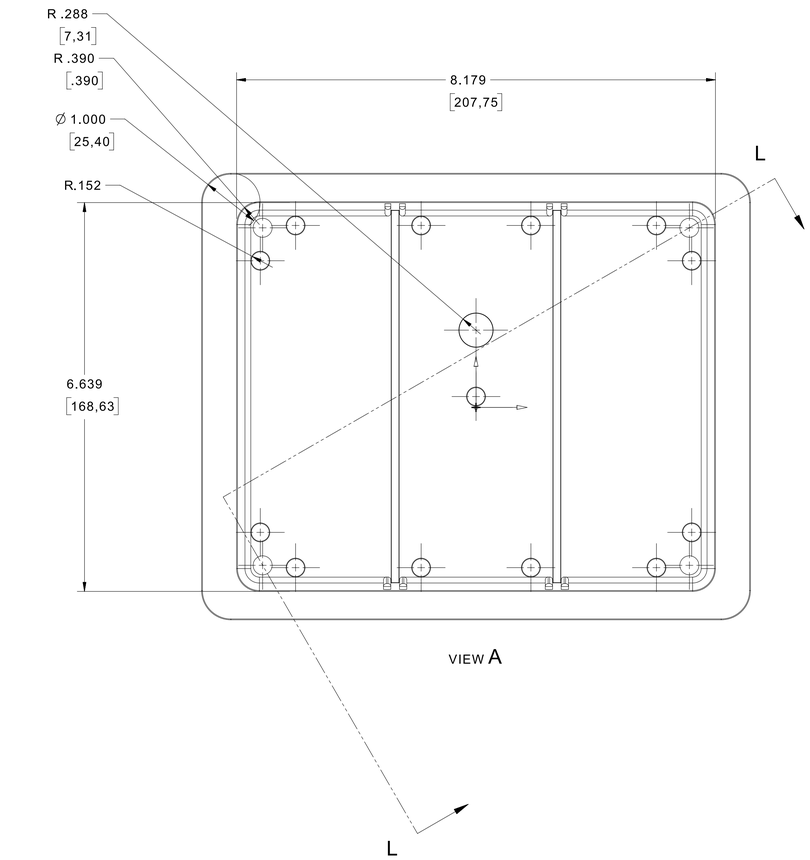

VIEW A

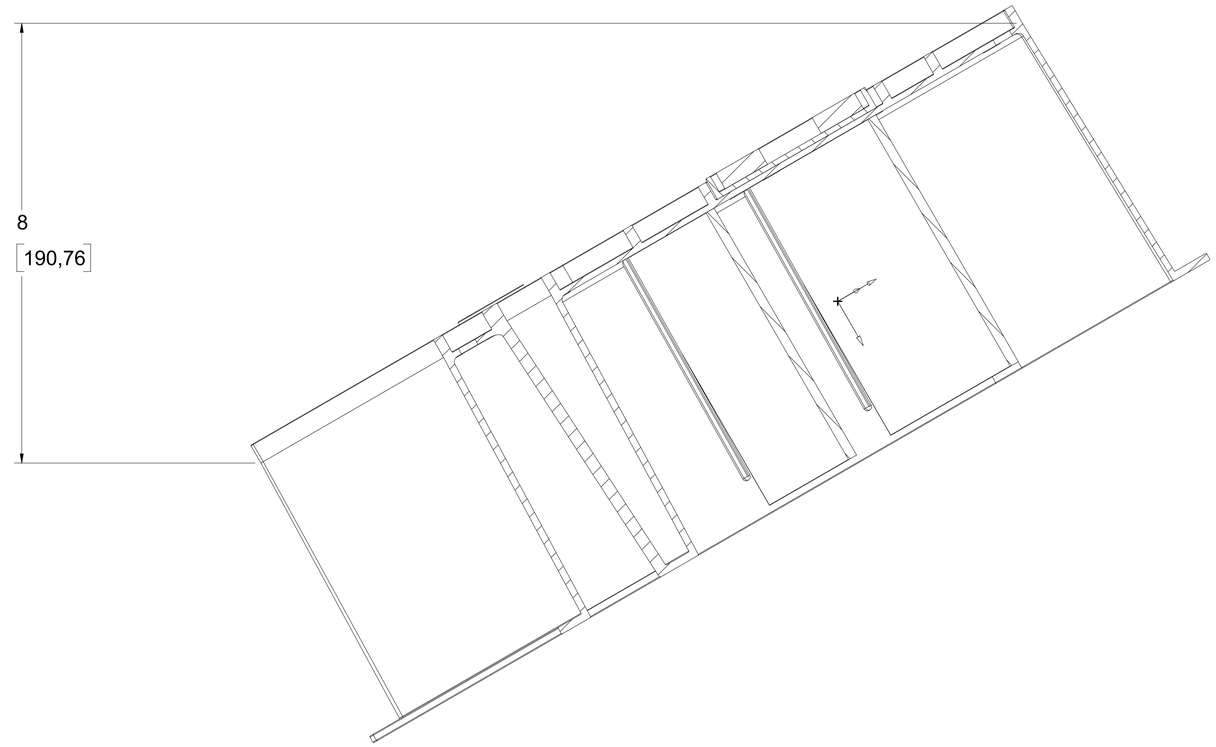

SECTION L-L

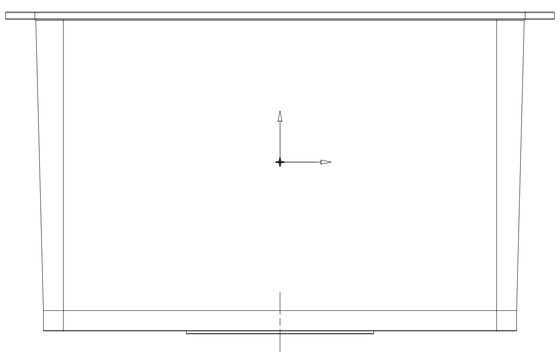

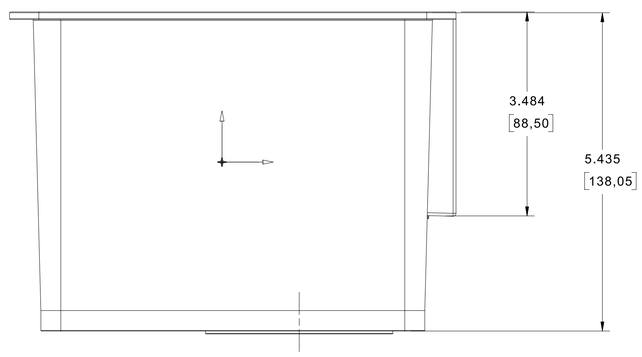

VIEW C

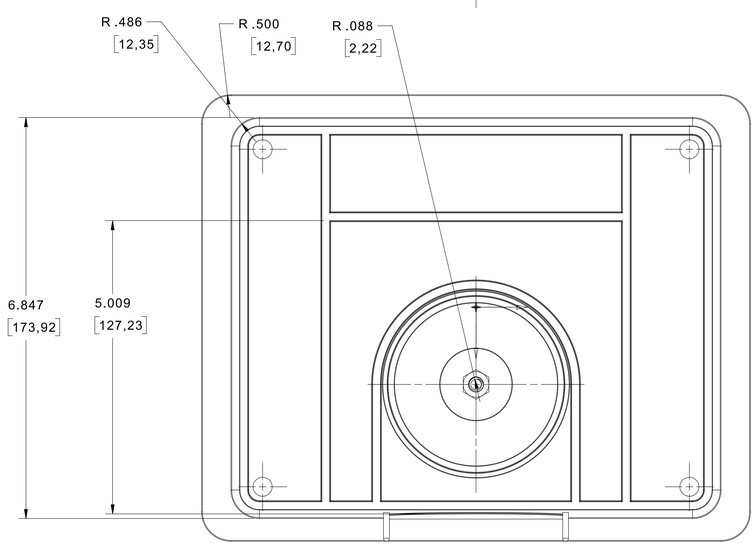

VIEW B

	Document Type: DETAIL		Sheet Size E
	Document Title: Ai_test_7		
Creation Date (YYYY-MM-DD) 2025-10-27	Drawing Number: Ai_Test_7	Revision -	Sheet 2 OF 3

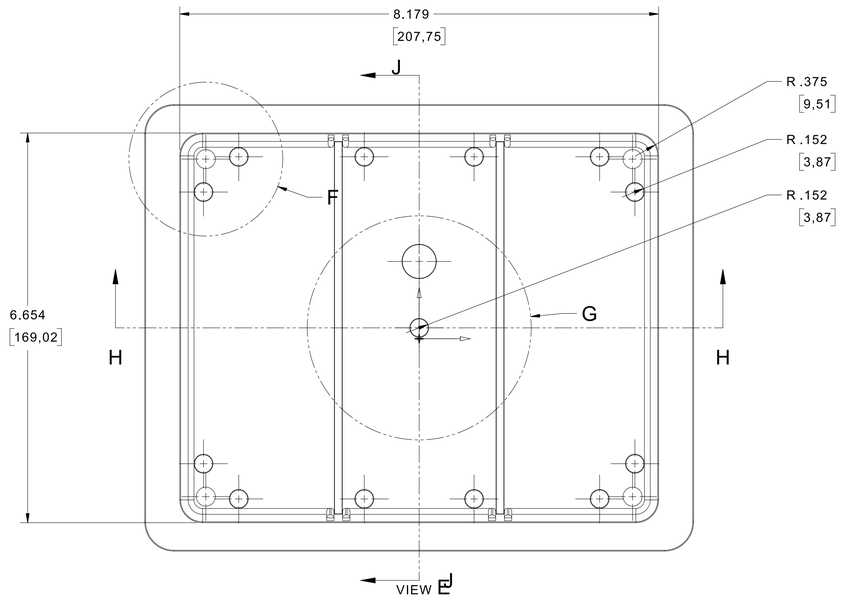

VIEW E

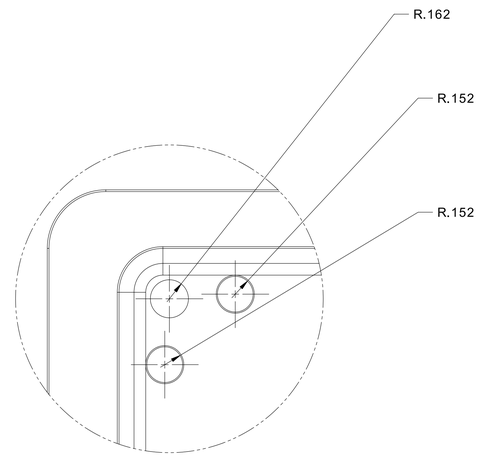

DETAIL F

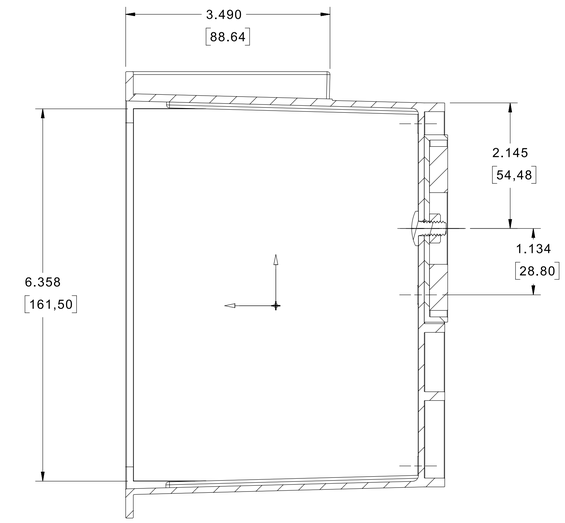

SECTION J-J

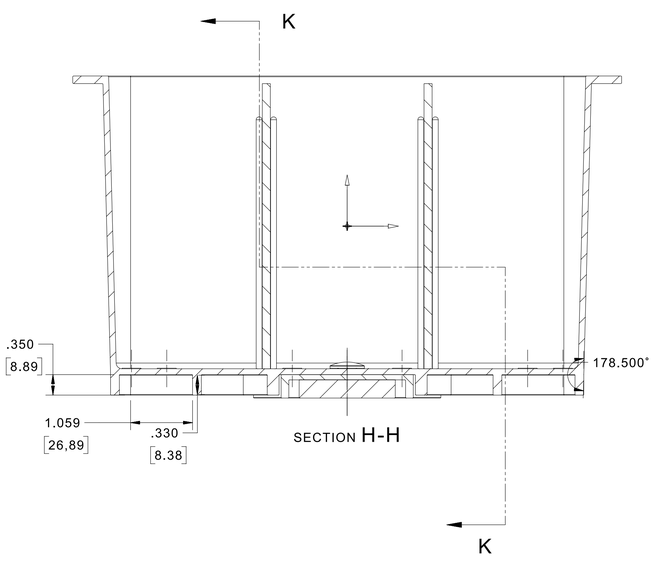

SECTION H-H

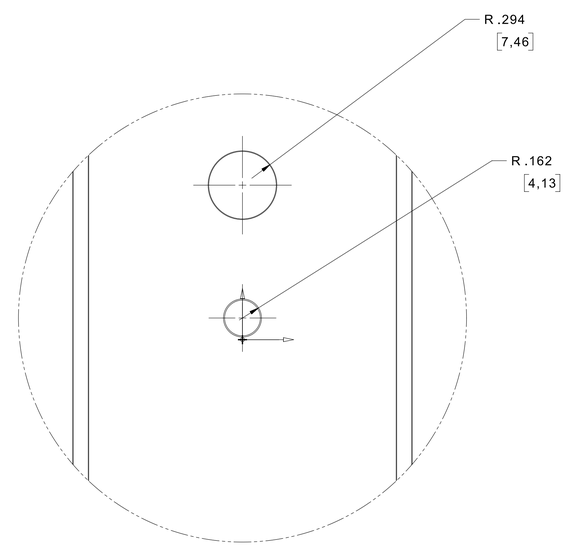

DETAIL F

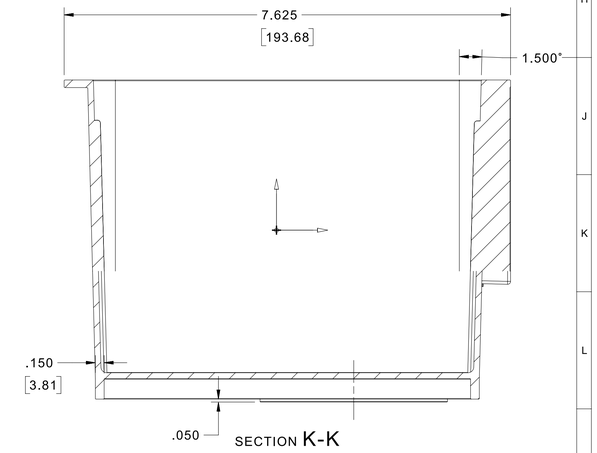

SECTION K-K

	Document Type: DETAIL	Sheet Size: E
	Document Title: Ai_test_7	
Creation Date (YYYY-MM-DD): 2025-10-27	Drawing Number: Ai_Test_7	Revision: - / Sheet: 3 OF 3